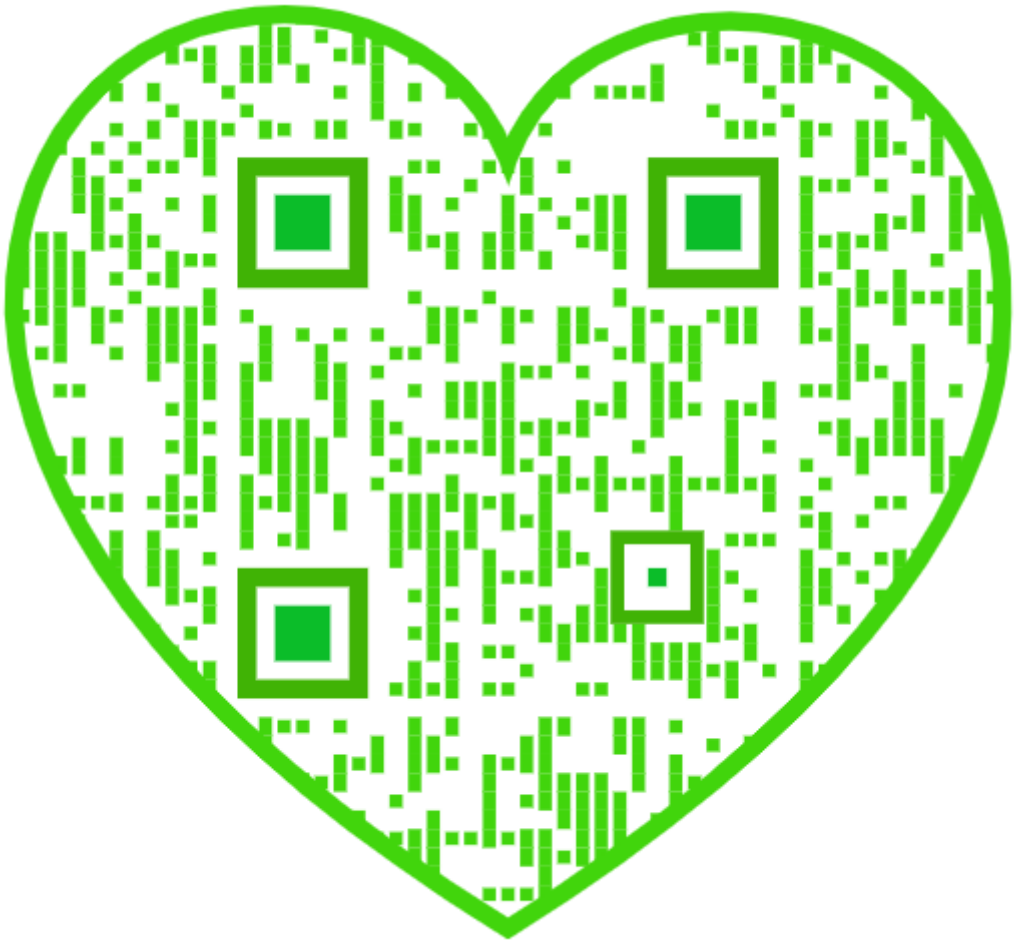

THE

MECHANICAL ENGINEERING OF COLLIERIES.

By T. CAMPBELL FUTERS.

(*In Two Vols.*)

VOL. II. ***Revised and Enlarged.***

7. Haulage.
8. Pumping.
9. The Generation and Transmission of Power.
10. Coke Ovens.

LONDON :
THE COLLIERY GUARDIAN CO. LIMITED
(The Chichester Press),
30 & 31, FURNIVAL STREET, HOLBORN, E.C.

1910.

(All rights of publication or translation are reserved.)

LIBRARY OF THE UNIVERSITY OF CALIFORNIA

GENERAL

CONTENTS OF VOL. II.

CHAPTER VII.—Haulage 487

Various Systems—Auxiliary Haulage—Hand Haulage—Laying Roads—Horse Haulage—Design of Tubs—Wheels and Pedestals—Axle Greasers—Self-acting Haulage—Incline Brake Wheels—"Jigs"—Tub Stops—Secondary Mechanical Haulage—Power Requirements—Main Haulage—Main-and-Tail System—Length of Sets—Rollers and Sheaves—Position and Design of Engines—Indicators—Drums—Expansion Valves—Endless Chain and Rope Haulage—"Over-rope" Haulage—"Under-rope" Haulage—Pulleys—Couplings—Clips—Engines—Tension Gear—Friction Clutches—Locomotives—Overhead Ropeways—Bibliography.

CHAPTER VIII.—Pumping 572

Importance of Mine Drainage—Position of Engines—Reservoirs—Water Cages—Mainsforth Engines—Ram Pumps—Bucket Pumps—Forcing Engines—Pump Valves—Cornish Pumps—Differential Valve Gear—Rotative Engines—Duplex Engines—Mechanically-moved Valves—Air-charging Pumps—Electric Pumps—Centrifugal Pumps—Pipes—Expansion Joints—Power Requirements and Pipe Capacities—Siphons—Transmission—Bibliography.

CHAPTER IX.—The Generation and Transmission of Power 632

Choice of Power—Use of Electricity—Coke Oven and Suction Gas—Steam—Lancashire Boilers—Mechanical Stokers—Forced Draught—Babcock-Wilcox Boilers—Stirling Water-tube Boilers—Boiler Accessories—Feed Water—Strength of Boiler Plates and Tubes—Flues and Chimneys—Electrical Terms and Units—Ohm's Law—Construction of Dynamos—Alternators—Direct-current and Three-phase Motors—Transformers—Cables—Switchboards—Storage Batteries—Driving Generators—Turbines—Compressed Air—Two-Stage Compression—Transmission of Compressed Air.

CHAPTER X.—Coke Ovens 699

Early Methods of Coke Manufacture—Beehive Ovens—Disadvantages—Construction—Charging and Drawing—By-Product Ovens—Capital Expenditure—Simon-Carves Oven—Coal Stampers—The Coppée Oven—Otto-Hilgenstock Oven—Semet-Solvay Oven—Huessener Oven—Simplex Oven—Mackey-Seymour Oven—Koppers Oven—Collin Oven—Elliott-Jones Oven—Coke Quenchers—By-Product Recovery Plant.

INDEX to Vols. I. and II. 770

296760

LIBRARY
OF THE
UNIVERSITY
OF
CALIFORNIA

CHAPTER VII.

HAULAGE.

NEXT to winding, the most important operation at a colliery is that of haulage, as probably the output of the pit depends more upon the efficiency of the haulage system than upon the winding plant.

It is often a much more difficult matter to get the coals conveyed to the shaft bottom to keep the winding machinery fully employed, than to wind quickly enough to prevent the haulage system standing. To wind a tub of coal is a matter of only a few seconds, but when it is considered that each tub has to be taken into the workings empty and brought back to the shaft loaded, having travelled during the journey there and back a distance of from one to five or more miles, the necessity for a highly efficient haulage system is easily seen.

Haulage may be divided into two divisions, viz. :—

A. Auxiliary haulage, consisting of

1. Hand haulage.	3. Self-acting haulage.
2. Horse haulage.	4. Secondary mechanical haulage.

And B Main haulage, consisting of

5. Main and tail system.	7. Locomotives.
6. Endless chain or rope system.	8. Overhead ropeways.

the last (8) being only used on the surface.

Each system varies more or less in detail according to the conditions of the mine, and the adoption of any particular system can only be decided upon after a careful review of the whole of the circumstances; but whatever system be adopted the principal factor to be reckoned with is that of friction.

In auxiliary haulage the distance travelled by the tubs is usually as short as possible, and as the road is more or less temporary it is not laid with the care and precision of the main road, and in consequence the greater part of the friction in auxiliary haulage is due to the unevenness of the road. In main haulage the road is permanent and carefully laid, and the friction due to this cause is reduced, but there is also that between the bearings and axles of the tubs, rollers, wheels and rope

friction, to be taken into account, and in order to ensure smooth running everything in connection with the system should be well designed, strongly constructed, and be thoroughly well maintained. "Rough and ready" methods of laying roads, fixing wheels and sheaves, on the assumption that "anything is good enough for pit work," ought to be avoided, and in all haulage work it will be found that a little extra care and attention in installing the plant, though costing a little more, will be amply repaid.

A.—1. At the coal face the only way of handling the tubs is by hand, the empty tub being "put" into the "stall" by a strong youth termed a "putter," and when filled removed by him. If the tub is very large, or the gradient heavy, so that this work is too heavy for manual labour, a small pony is employed in charge of a youth, the operation being termed "pony putting." The workings, however, are driven to avoid gradients as much as possible, and as the workings are constantly being moved forward, the road usually consists of short lengths of bridge rails about 4 ft. long, with holes in the flanges which are nailed to cross sleepers of wood—these latter being of larch, or fir, from 3½ to 6 inches in width, and 2½ to 3½ inches in depth. This road is led into the face, and the two front wheels of the tub are allowed to drop over the end on to the thill or floor of the seam, which gives the extra height of the rails and sleeper between the top of the tub and roof for filling.

Each tub as it is filled is "put" from the face to a siding, communicating with a number of workings, which is termed in the North of England a "flat." A double road is laid, long enough to hold a small number of tubs, one being the full siding, and the other for empties, and from this "flat" the tubs are removed in sets varying from one to six by horses, or ponies, or by a small auxiliary engine, to a point sometimes termed a "landing," where they join the main haulage. This "landing" is really the terminal station of the main system, and in the same way as each "flat" serves several working places, this station serves several flats, the whole forming a "district." As the workings advance the distance between the face and the flat becomes too great to be worked economically, and the flat is shifted further "in-bye," that is, nearer to the face and further from the landing, until the distance becomes too great for the auxiliary haulage employed between the flat and the landing, when the latter is moved in turn and the main haulage road lengthened.

It is extremely unlikely that hand labour for "putting" will be superseded in this country, but there appears to be no real reason why horse haulage between the flat and landing ought not to be entirely superseded by small auxiliary hauling machines worked either by electricity or compressed air. The difficulty in arranging mechanical haulage to take the place of hand putting lies in delivering the empty tub to the face, and this question will never be satisfactorily solved except by some

PLAN OF BRIDGE-RAIL

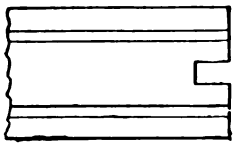

PLAN OF BRIDGE-RAIL

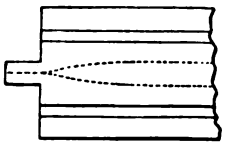

SIDE VIEW OF CHAIR.

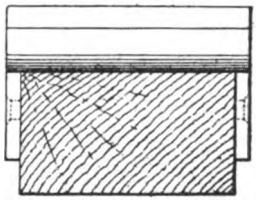

END VIEW OF CHAIR

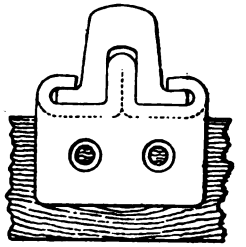

SIDE VIEW OF CHAIR.

END VIEW OF CHAIR.

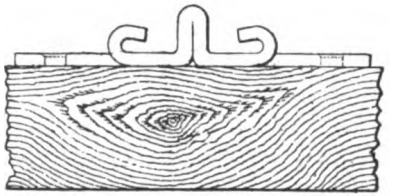

PLAN OF CHAIR.

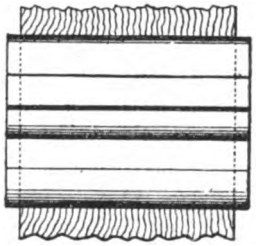

PLAN OF CHAIR.

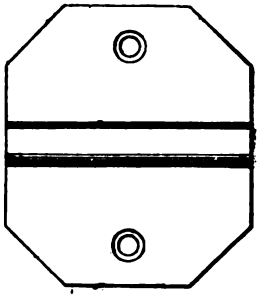

PLAN OF CHAIR.

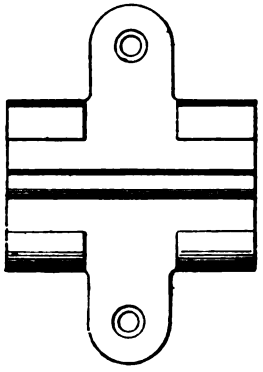

END VIEW OF CHAIR

SIDE VIEW OF CHAIR.

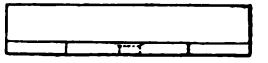

FIGS. 1057 TO 1067.—BENTLEY'S RAIL JOINTS AND CHAIRS.

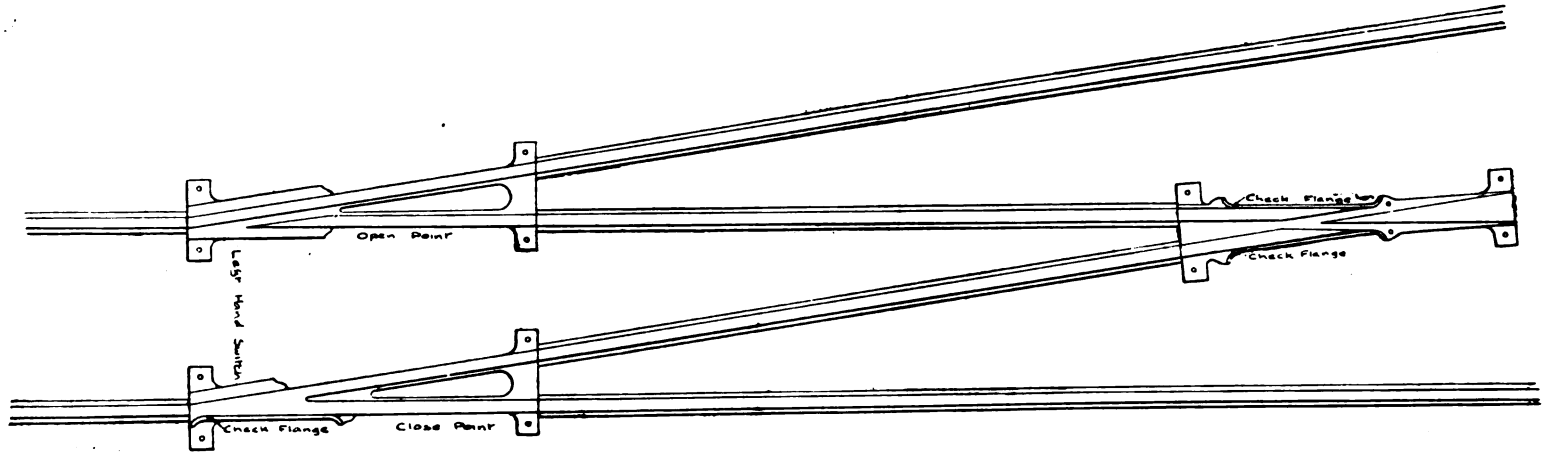

FIG. 1069.—CAST STEEL POINTS AND CROSSINGS.—LEFT-HAND TURN-OUT.

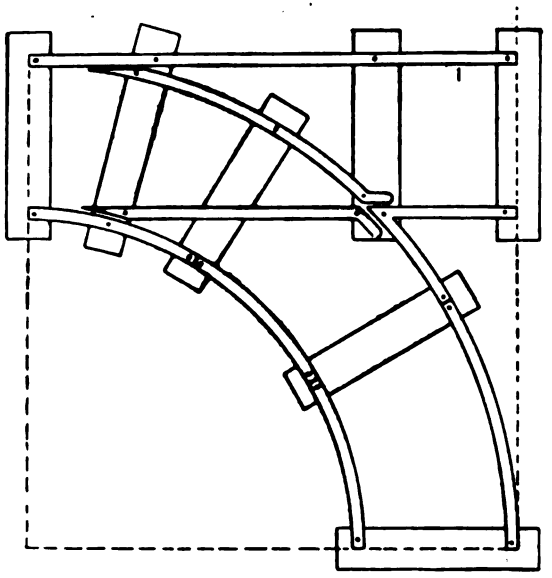

FIG. 1068.—REVERSIBLE RIGHT-ANGLE TURN.

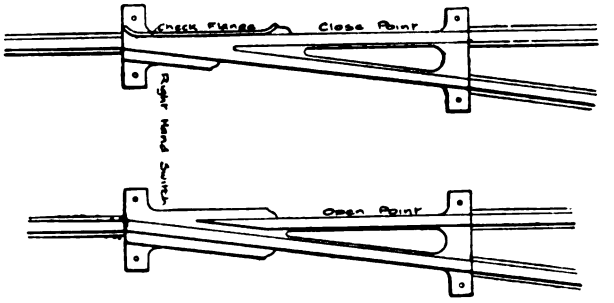

FIG. 1070.—CAST STEEL POINTS—RIGHT-HAND TURN-OUT.

form of small electric, or other locomotive provided with a power reservoir, but which would necessitate the use of switches and a more expensive railway.

As previously mentioned, the road in the workings is laid in a rough and ready fashion, by nailing short lengths of rails to wood sleepers, the result being that the road is more or less uneven, out of gauge, and the joints out of alignment. In order to improve the road and economise material and labour required in laying rails, Mr. Bentley has introduced the form of rail and the chairs shown in figs. 1057 to 1067. The improvement in the rail consists in making the rail with a projecting tongue at one end, and a corresponding groove at the other, which, being fitted together in laying the rails, prevents the joints from becoming uneven. The chairs, as will be seen, consist of forgings or castings with a raised portion which fits into the hollow or under part of the rail while the flanges are held by the turned-up edges, thus keeping them in alignment and rendering nailing unnecessary. The chairs are fitted to the sleepers to the proper gauge before being sent down the pit.

Curves are formed by a number of short lengths being bent in a jig to a certain radius, so that three or four joined together would form a complete right angle. These, however, are not used for forming complete right angles only, but also in cases where a bend in the road will not allow straight lengths to be joined up. Right-angle turns or turn-outs are best constructed from square bar steel or iron as shown in fig. 1068, which have the advantage of being either right or left handed according to the way they are laid down. No switches are necessary, the tub being guided by hand into the required road. The "face" roadways join to one common roadway leading to the "flat," the latter part being constructed of flat bottom rails in longer lengths, usually about 12 ft., fixed to sleepers either by nails through holes in the flanges or by dog spikes, the latter, however, not being so easily withdrawn. At this point cast iron or steel points and crossings are used—one, termed a close point, which guides the tub in the right direction, the other an open point, having a space or gap to allow the flange of the wheel to pass through, as shown in figs. 1069 and 1070, the former of which also shows a crossing. Similar points and crossings may be used on landings, or other places where one road is always branching into two sidings, one being always for tubs coming in and the other for going out.

On main roads, however, the rails are heavier, varying from 18 lb. to 30 lb. per yard, flat-bottom section being invariably used, and in as long lengths as can be conveniently handled at the pit bottom, 18 to 24 feet being usual lengths. They are spiked to wood sleepers—iron or steel sleepers being but little used—and fished at the joints, with proper section fishplates and bolts. Switches and crossings may be castings similar to the points shown in figs. 1069 and 1070, except

that they are provided with loose tongues working on a stud or rivet set on end and arranged to be moved by a rod and lever, where a branch road is taken off the main road; or may be manufactured from rails of the same section in a similar manner to surface railways. For underground railways, however, points and crossings made of cast steel will be found much cheaper and handier in the long run, as when worn out they are very easily replaced, and may be always kept in stock, whereas points and crossings manufactured from the same section as the rail

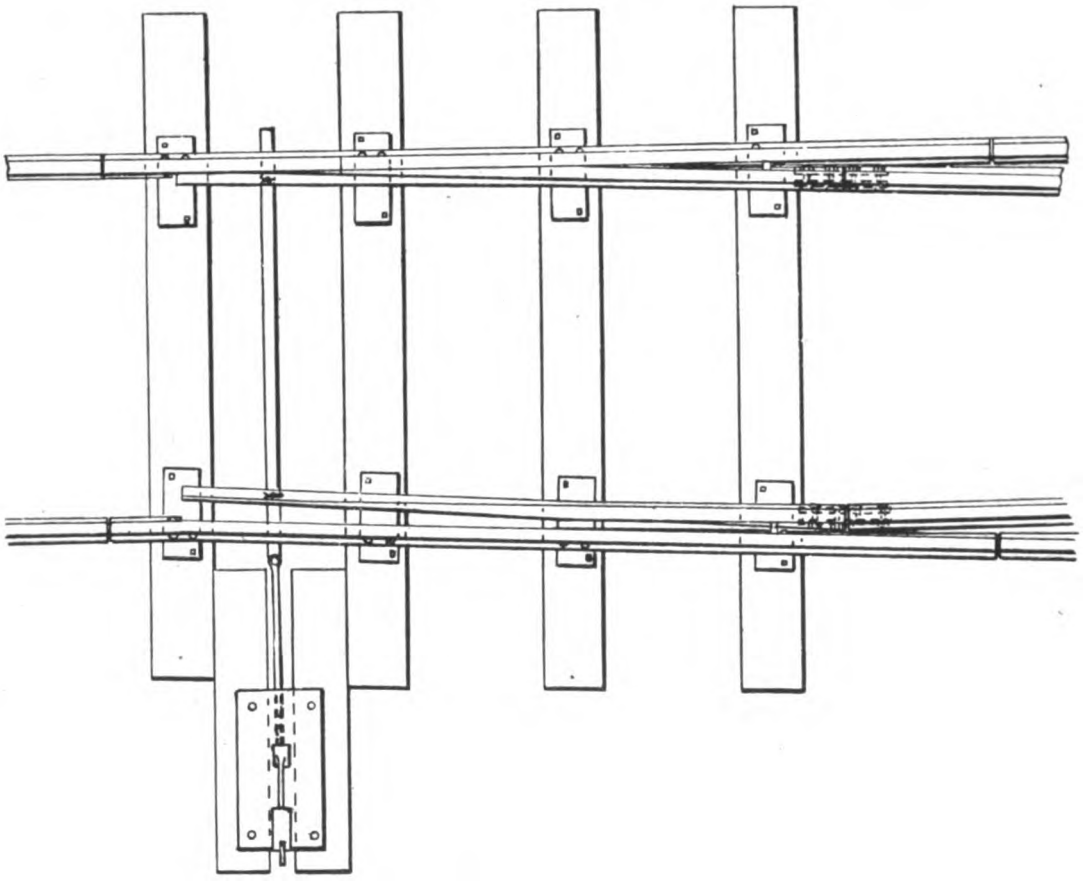

FIG. 1071.—F.B. SWITCHES—LEFT-HAND TURN-OUT.

are expensive to construct—if made properly as they ought to be. Fig. 1071 shows a pair of left-hand turn-out points, and fig. 1072 a crossing, made from flat-bottom rails, riveted to flat plates, the check rails being bolted to the through rails by distance pieces.

Horse haulage is probably the most expensive means that can possibly be

employed for the transportation of coal tubs. To deal with heavy loads, large horses have to be employed, and it is necessary in many cases to make height for them ; it also necessitates the employment of drivers, farriers, or horse-shoers, saddlers and horsekeepers. Stables and granaries, in which to store and prepare their food, have also to be provided; and, in addition, there is all the trouble and uncertainty connected with their purchase, " breaking " and working. In many cases, however—more especially in small collieries—their use cannot be avoided, owing to the heavy initial expense in putting down plant for the mechanical transmission of power, but in collieries where a large number of horses are employed in auxiliary haulage, there is no question as to the advisability of installing plant to supersede them by mechanical haulage.

Underground stables are formed by excavating the rock, and in bad ground

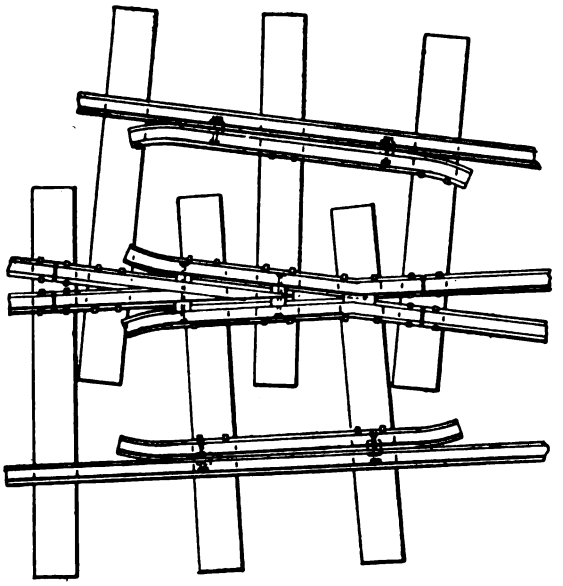

Fig. 1072.—F.B. Rail Crossing.

building side walls and arching the top, forming the stalls with wood partitions. Where only the roof is bad, " crib " or stall partition walls, built up to the roof 9 to 18 inches thick with girders across, covered with 11 in. by 3 in. creosoted deals, make a substantial job. In order to prevent the animal throwing the food out of the manger, this should be divided into three equal parts by two round iron bars; the manger being supported on a brick wall filled in solid with concrete or other material, to prevent rats nesting.

Instead of forming separate stalls, a loose rail suspended from the roof by two light chains is sometimes employed, which certainly has the advantage of cheapness and free ventilation. The stalls, which are from 5 ft. to 6 ft. in depth and from 4 ft. 6 in. to 5 ft. 6 in. in width, depending upon the size of the pony or horse, should be paved with some hard material, having an inclination of from 2 to 3 inches per yard, and a gutter running the whole length of the stables for drainage.

In arranging granaries the food should all be stored on the upper floor, shoots and hoopers being arranged to deliver the beans and maize to the crushers on the second floor, where the crushing and hay-chopping machinery is placed, other shoots or conveyors being arranged to convey the crushed food to a mixing hopper provided with a discharge opening for filling bags.

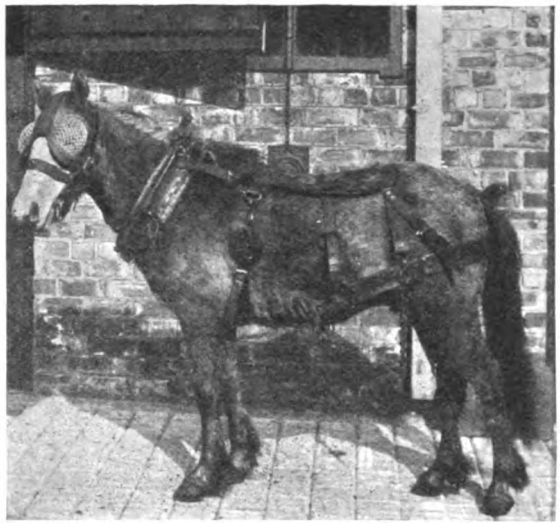

FIG. 1073.—PONY HARNESS FOR LIMBERS.

Horses and ponies are connected to the tubs either by a pair of shafts or "limbers," as they are termed, suspended by means of a saddle and breechings, and coupled to the collar in the usual way. Fig. 1073 shows a pony with harness for carrying limbers. The limbers consist of an iron bow with two wood shafts bolted into the Y ends of the bow except for the smaller size ponies, when they are entirely made of iron. The bow is provided with a drop pin and cottar, which fits into a hole in the middle or "yoke" hoop on the tub. This is the common method in the North of England, but elsewhere it is usual to dispense with "limbers" and connect the animal to the tub by means of a pair of brace chains, with a stretcher bar, and

another chain from the centre of the stretcher bar, or a set of Y chains, terminating in a hook, which is coupled to the tub drawbar. Shafts have the advantage that a horse can steady a load down hill, whereas with a chain it is necessary to drag or "sprag" the wheels of the tub, and it would appear that, generally speaking, shafts have the advantage over a chain, as the horse not only starts but stops the tub, and there is no danger of the animal being overrun. An objection sometimes made

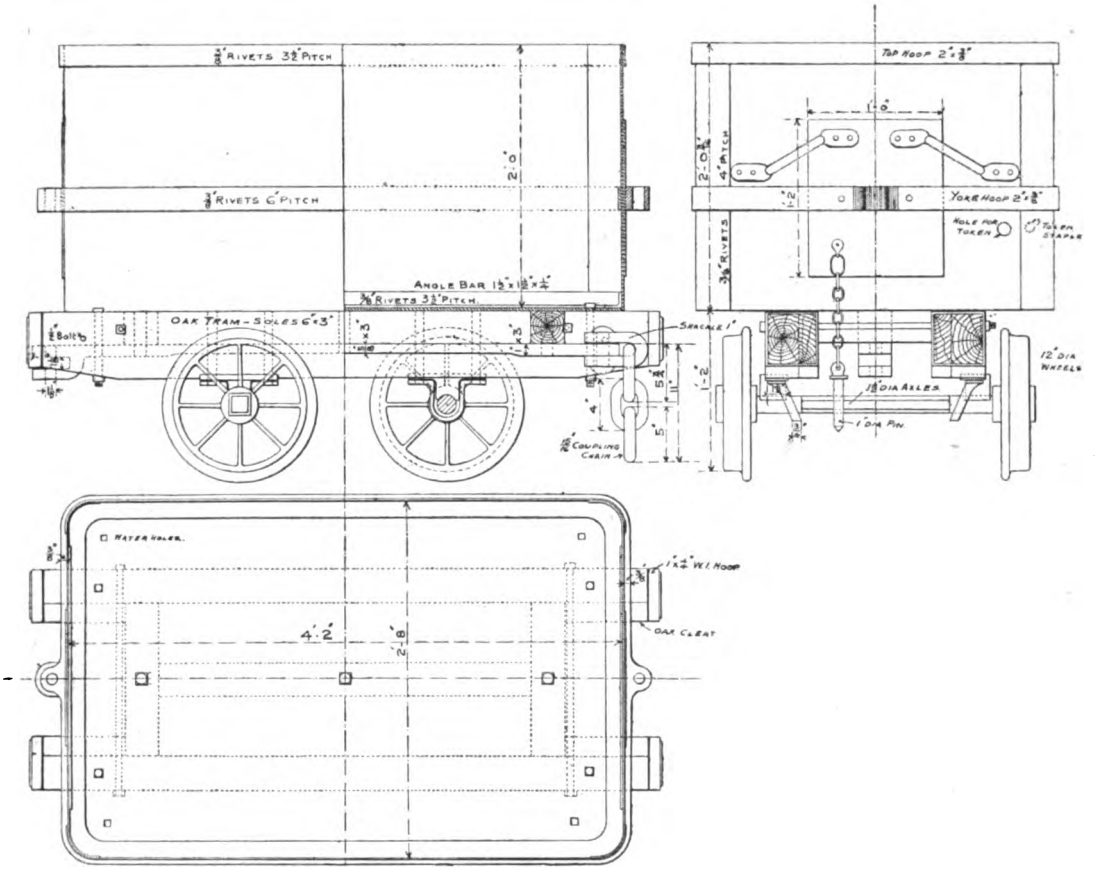

FIG. 1074.—IRON COAL TUB.

against them is that a horse requires more room to turn, and is more liable to knock timber out; but this can scarcely be said to be the experience in the North of England.

The necessity for handling the tubs by men and horses has an important bearing upon their size; as while it is important to keep the capacity of the tub as large as possible, so as to increase the proportion of the net weight of coal to the

gross weight, yet the fact of having to move single tubs at "flats," and "landings," replacing when derailed, &c., on level roads, prevents the adoption of a very large tub. Professor Galloway, at Llanbradach, introduced coal tubs having a capacity of 2 tons, which were mounted on springs somewhat similar to a railway truck, and which were hauled out of the working places by winches, horses and ponies being entirely dispensed with, an ideal state of things which certainly could to some extent be copied with very great advantage. With very large tubs, however, the rails have to be well laid and kept in order; they are clumsy and heavy to push

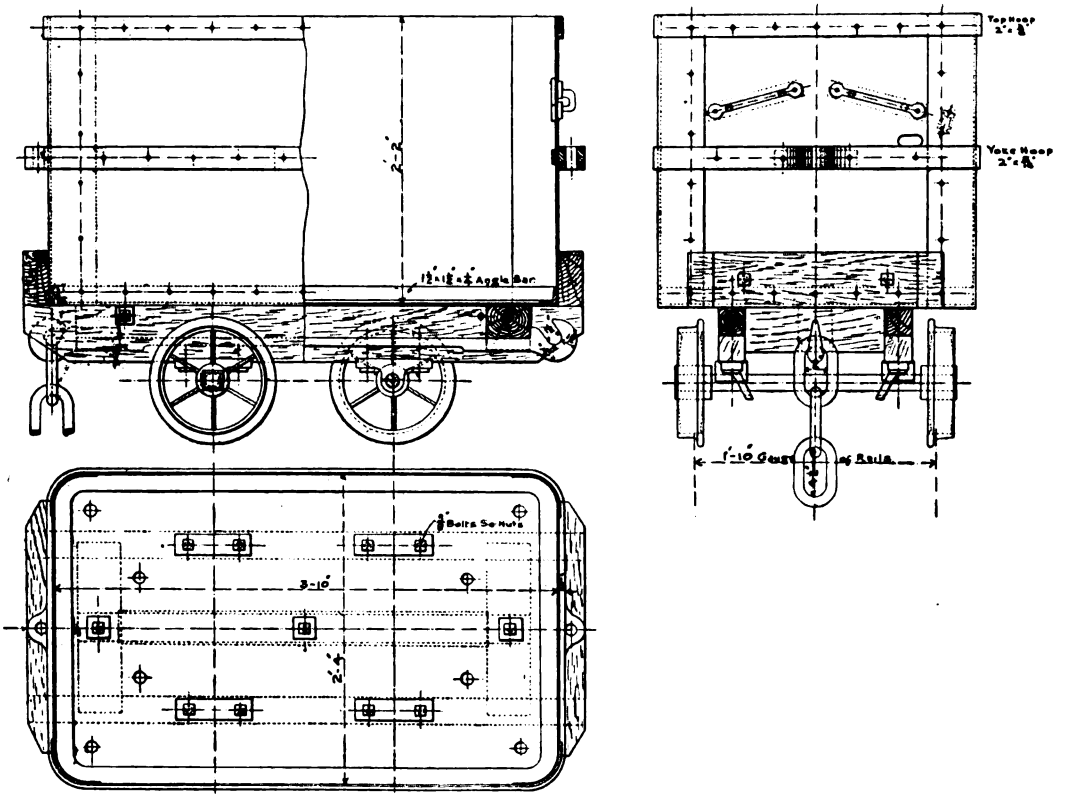

FIG. 1075.—IRON COAL TUB.

about, and when derailed require several men or small jacks to re-rail them again. A few collieries in South Wales use tubs with capacities varying from 20 cwt. to 35 cwt.; but the majority of collieries only use tubs varying from 8 cwt. to 14 cwt. capacity, 10 to 12 being the most general size.

The design of a coal tub is of course influenced by the carrying capacity and available height, and generally consist of square-shaped wood or iron bodies mounted

upon an oak-wood framed tram, as shown in fig. 1074. In this case the body is of iron—and it may be mentioned here that iron appears to be better than steel for withstanding corrosion—the sides being $\frac{1}{8}$ in. thick and the bottom $\frac{1}{4}$ in. thick, the total weight empty being about 7 cwt., and the carrying capacity 10 to 12 cwt.

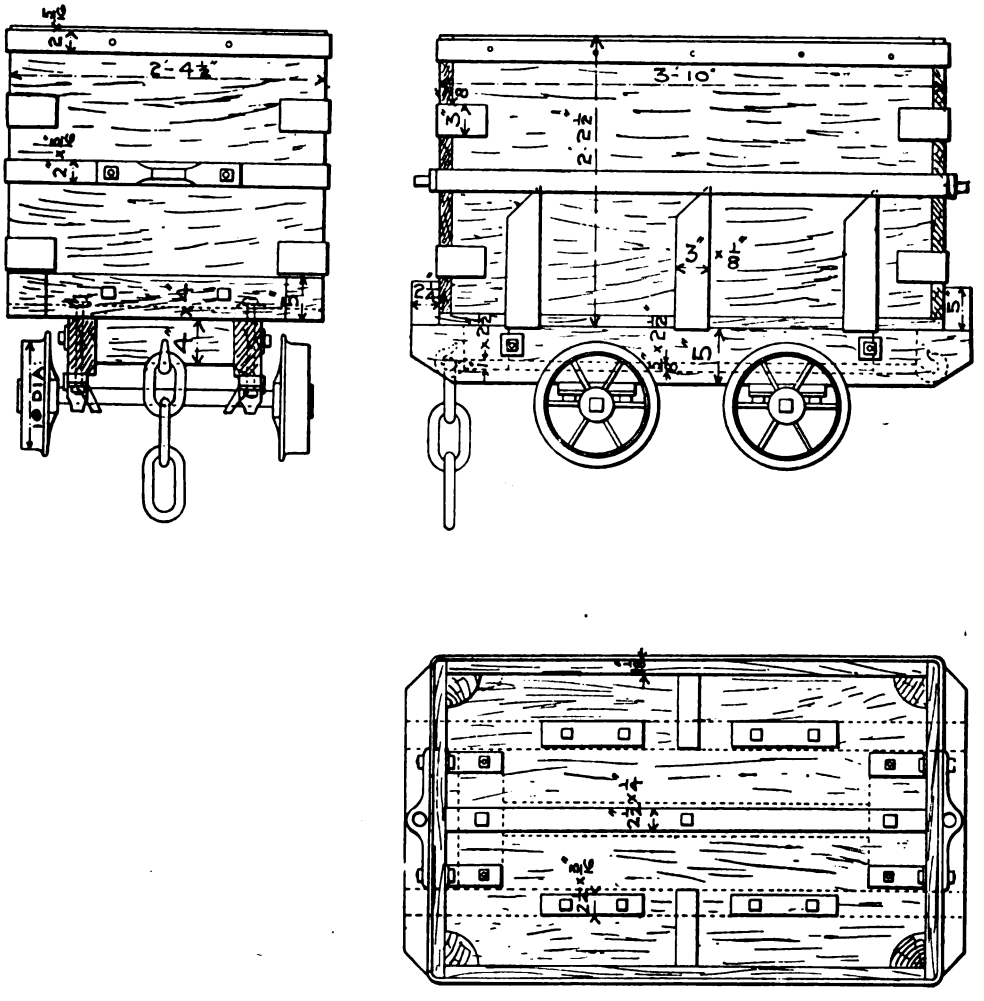

FIG. 1076.—WOOD COAL TUB.

The middle hoop, termed the "yoke" hoop, is provided with an "eye" at each end, into which the pin on the horse or pony limbers fit, and to prevent this pin—which always has more less "play"—from wearing a hole in the end plate of the tub, a yoke plate is riveted to the end plates, as shown. The drawbar is of forged steel,

and made with a single eye at one end, to which the coupling chain is attached by riveting a shackle to the drawbar, whilst at the other end the coupling chain is lifted into the double eye, and held there by the pin shown attached to the tub by a small chain. The soles of the tram are produced to form buffers, being thickened by bolting an oak cleat to the ends, and fixing an iron hoop over the whole. Buffers of this description, however, are not satisfactory, as the cleats and hoops get knocked off, and in passing around curves the buffers get locked, frequently causing derailment. Instead of fixing wood cleats, the better plan is to replace the hoop with a special cast iron or steel shoe to increase the buffing area.

Another tub is shown in fig. 1075 which has also an iron body and oak tram, but the buffer consists of a piece of elm or oak the full width of the tub bolted by two bolts to the end ; the tram ends project slightly to carry the buffer. The drawbar also consists of two hooks, one being closed after the coupling chain is put over to fix it. This is probably one of the best designs of pit tub, as the buffers never lock, and coupling pins are avoided, the latter being a frequent source of trouble, either by getting out of place or breaking; with a hook the coupling chain is merely slipped over, and as a rule is much stronger and wears better than a pin.

A tub with a wood body is shown in figs. 1076, the sides being held together with corner posts, and the bottom nailed to the sides, and strengthened by 3 in. by $\frac{1}{8}$ in. corner or angle plates. The objection to corner posts is that they reduce the capacity of the tub, and are often replaced to advantage by an angle iron, and the outside corner plates, instead of being made as shown, are frequently made the whole depth of the tub, the bottom ends being split and turned in. In this tub the deals merely butt against the other, but in other cases they are grooved and fitted with a wood or steel tongue, or "sliver," as they are termed in the North of England. Though adding to the cost of the tub, the steel tongue strengthens the joint and prevents leakage of fine coal, and this latter point is now one of considerable importance in dry and dusty mines.

In all the above tubs the wheels are under or inside the body, which has one disadvantage that the tram must be deep enough to keep the bottom of the tub clear of the wheel flange, and as the total height of the tub is usually limited, the carrying capacity is decreased. This may be overcome by placing the wheels outside the body, either by making the body tapered, where a narrow gauge is required, or by widening out the gauge and placing the wheels outside, as shown in figs. 1077, which shows a wood tub with outside wheels, but mounted upon a tram, in such a way that not much advantage is reaped, from a capacity point of view, though larger wheels could be adopted. The drawbar is placed at the bottom of the tub inside, a plan always adopted with tubs without trams. Another method

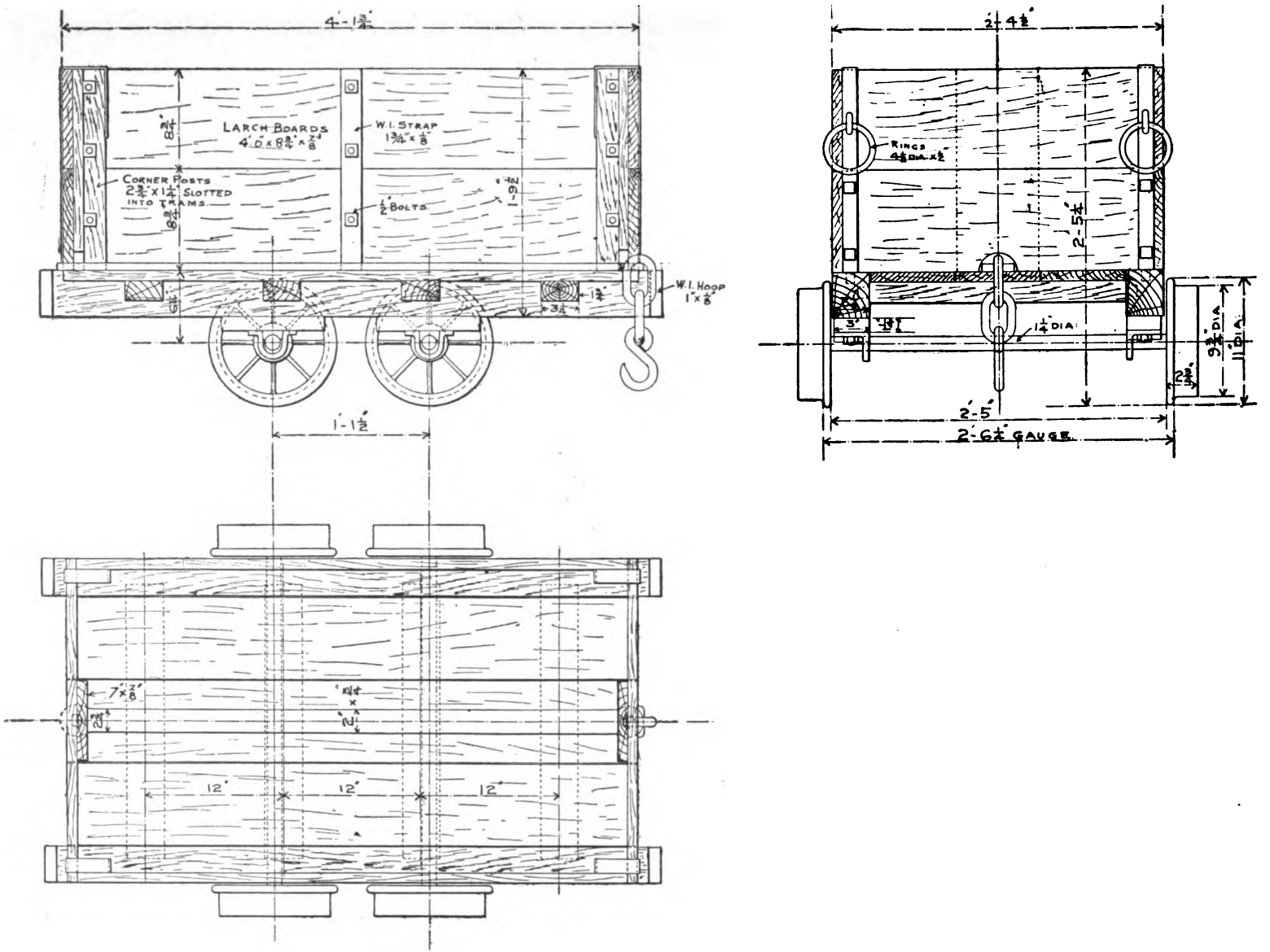

FIG. 1077.—WOOD COAL TUB, OUTSIDE WHEELS.

sometimes employed is to let the wheels project above the bottom by cutting slots, and covering these over by cast steel or other covers.

A tub without a tram, however, is not to be recommended, especially where they are likely to be subject to rough usage, or where the haulage is heavy. Iron frames are often used and combine strength with lightness, and fig. 1077A shows an all-steel tub with the bottom pressed by dies to form a tram, the plates of the body being corrugated to stiffen them.

Water tubs are used for conveying water to different parts of the pit, such as between a source of supply and stables, or for collecting small quantities of water from dip workings, &c., and a wood tub suitable for the latter purpose is shown in fig. 1078. This is not fitted with a drawbar, as it is not intended for main haulage, but only with a "yoke" for pony haulage. The inside is coated with a boiling mixture of tar and pitch, with a little quicklime added, and is fitted with a lid attached by leather hinges for filling and a wood plug for emptying. Iron tubs

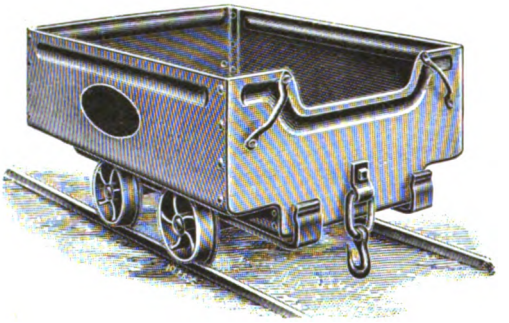

FIG. 1077A.

for conveying water on main haulage, especially on the main-and-tail system, are best made cylindrical and secured to a separate frame by straps.

Fig. 1079 shows a tub used for moving stone and *débris* for "stowing" or "packing," being fitted with an end door and provided with "yokes" for pony haulage, and a bar is fixed over the top at the door end to support the sides.

The question of wood or iron bodies is a somewhat difficult one to decide, but probably the advantages lie with the iron body. There is not much difference in weight, and the upkeep of a wood tub, though probably somewhat less in first cost, will be greater; and in accidents the wood tub suffers most, as where an iron tub would be only bent, the wood deals would be broken. Figs. 1080, 1081 show a cramp and jack for the purpose of straightening up badly-bent iron bodies.

In any design of tub it is important to keep the wheels as large and the axles

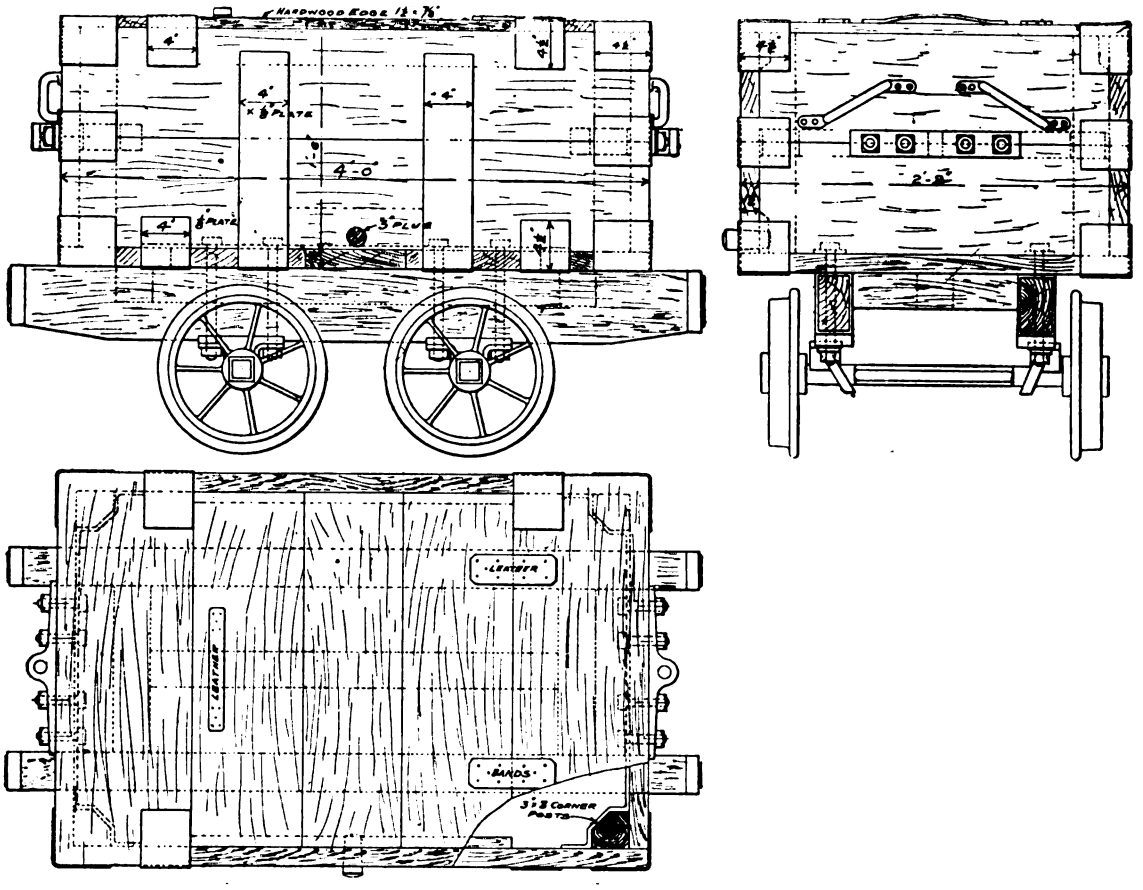
HARDWOOD EDGE 1½ x ⅞"
4'
4'
4'

as small as possible, consistent with the strength of the latter, as upon the ratio of the two depends the friction. If

F_t = tub friction,
D = diameter of wheel,
d = diameter of axle,
μ = co-efficient of friction,
W = total weight of tub and coal,

Then the power necessary to overcome the friction between the axles and bearings

$$F_t = \frac{d \times \mu \times W}{D}. \qquad (1)$$

With ordinary cast iron bearings or pedestals the co-efficient of friction will be about 0·1, and consequently a tub weighing, say, 2,240 lb., with 12 in. diameter wheels and 1½ in. diameter axles, would require a force P pounds,

$$F_t = P = \frac{1{\cdot}5 \times 0{\cdot}1 \times 2{,}240}{12} = 28 \text{ lb.},$$

to keep it in motion.

It is of the utmost importance to see that bearings are well lubricated, but the rough conditions under which pit tubs are worked render almost impossible any refinement in lubricating arrangements. The usual arrangement of bearing is shown in figs. 1082 and 1083, which consists of a plain cast iron cod embracing the axle for about half its diameter, with a wrought iron clasp or guard to prevent the tub being lifted off the axle. The clasp is bent over to one side to allow the axle to pass over automatic greasers. Other arrangements of fixing clasps are sometimes adopted, one consisting of making two grooves in the wood side of the cod and bending back the sides of the strap to fit into them, which has the disadvantage of weakening the cods and necessitating the lifting of the cod before the axle can be removed. Again, cods are sometimes made of cast steel, which causes more wear on the axles than cast iron, and for this reason should not be used. Another pedestal designed to render lubrication as efficient as possible, shown in fig. 1084, is cast with diagonal slots across the bearing, which open into a box cast in the back containing grease. Another method is to make the pedestal of cast steel, with dovetailed sides, between which is fitted white metal or brass liners. The former metal is excellent where it can be kept lubricated, but on long runs at high speeds, such as are prevalent in main and tail haulage, it is of little use, as the bearing gets so hot that the metal runs out; this, however, can be prevented if sufficient automatic greasers are fixed along the length of the engine plane to ensure perfect lubrication.

The wheels are usually fixed to the axles either by being hydraulically pressed, keyed, or wedged on with wood and iron wedges. The latter arrangement is convenient, as it enables a wheel to be readily removed by burning out the wood

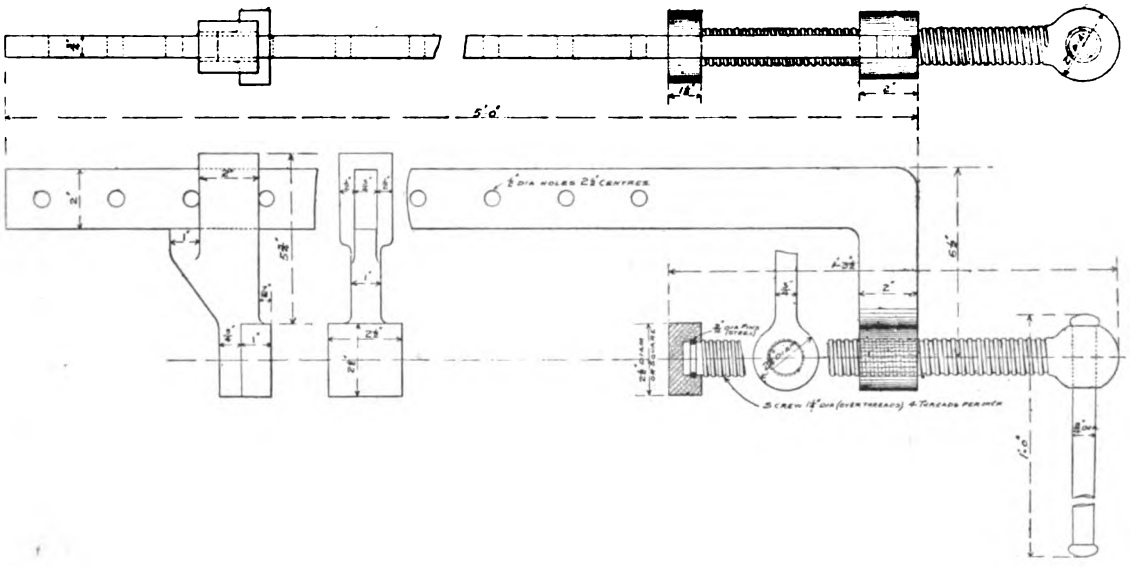

FIG. 1080.—CRAMP FOR REPAIRING IRON TUB BODIES.

FIG. 1081.—"JACK" FOR REPAIRING IRON TUB BODIES.

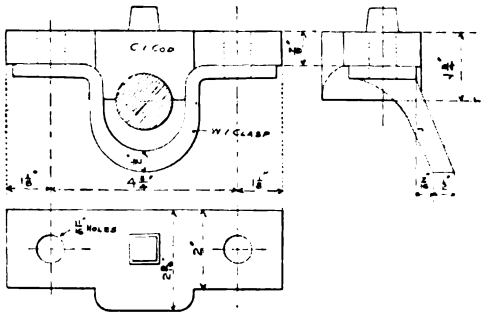

FIG. 1082.—TUB AXLE BEARING.

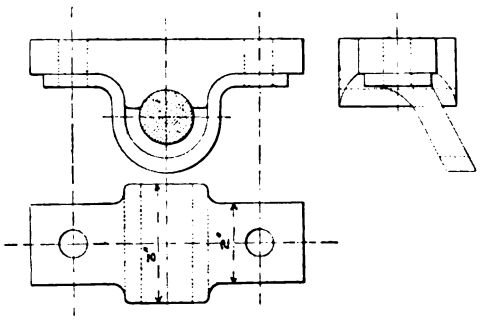

FIG. 1083.—TUB AXLE BEARING.

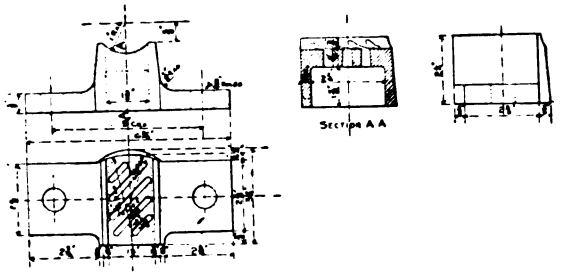

FIG. 1084.—GREASE BOX BEARING.

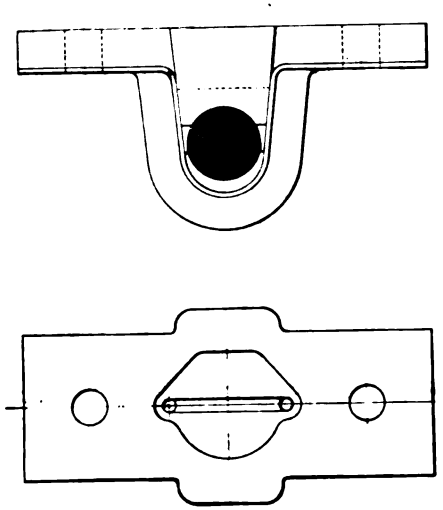

FIG. 1085.—INSIDE SELF-LUBRICATING PEDESTAL.
Hardy Patent Pick Co.

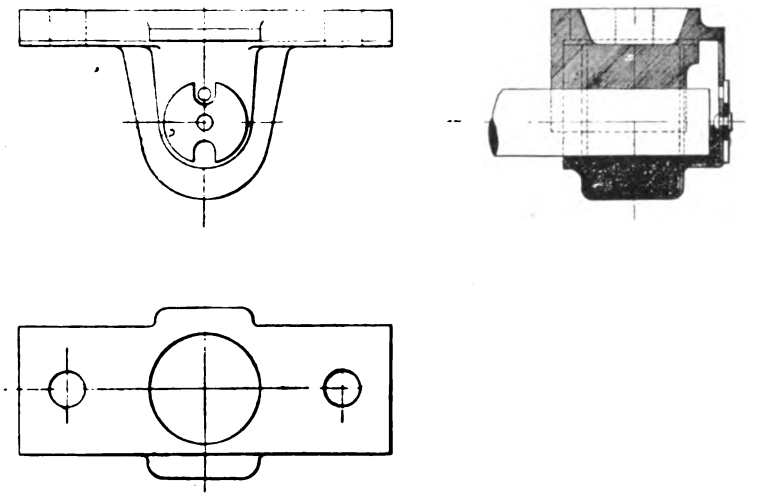

FIG. 1086.—OUTSIDE SELF-LUBRICATING PEDESTAL
Hardy Patent Pick Co.

packing, and a new one being fixed on. The diameter of the axle may be determined from

$$d = \sqrt[3]{\frac{W.}{500}} \qquad (2)$$

where W = the capacity of the tub in pounds,
d = diameter of axle in inches,

and the minimum length of bearing should be $2d$, and the axle should be of forged steel.

Several proposals of self-lubricating bearings have been put forward, but none have met with much favour, principally for the reason previously given, that conditions of working do not admit of any refinement in this direction. Fig. 1085

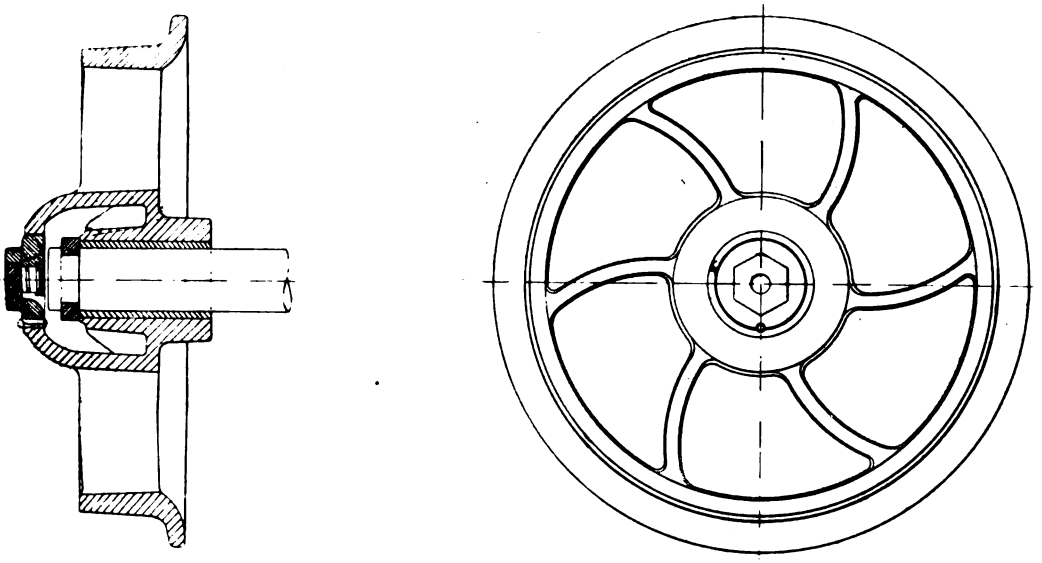

FIGS. 1087 AND 1088.—ROWBOTHAM'S PATENT SELF-LUBRICATING WHEEL.

shows one of the best arrangements by Messrs. the Hardy Patent Pick Company, and, as will be seen, consists of a stamped steel dish or cover, which takes the place of the ordinary strap, and which contains a piece of felt soaked in oil for lubricating the axle. The dish fits closely at the ends of the journal to keep out dust and dirt. Fig. 1086 shows the bearing arranged for outside journals.

Loose wheels are very seldom used on account of the difficulty in upkeep, and the tendency to get out of gauge. The only advantage that can be claimed on behalf of loose wheels is that there is less friction in passing around curves, but the difference is so little that this advantage may be sacrificed for the more practical considerations of having the wheels always true to gauge and lessened cost of upkeep.

Loose wheels may be provided with a hollow tub which forms an oil reservoir, to give continuous lubrication, one of the best known—Rowbotham's—made by Messrs. Hadfield's, being shown in figs. 1087 and 1088. Other arrangements consist in fixing the wheels, but dividing the axle at the centre, and fitting them to a long tubular bearing—containing an oil reservoir—equal in length to the width of the tub, and bolted to its underside. Roller bearings have also been proposed, but the objection to all these types is in the expense of upkeep, as it is difficult to make dust proof and carefully-machined bearings strong enough without being clumsy and complicated, to stand the rough usage and keep out the dirt which is practically inseparable from ordinary mining conditions. On the other hand, there are many collieries in which conditions lend themselves to the adoption of an improved type of bearing, and in all cases where they can be used, there is no question as to the advantages to be derived.

Where self-oiling bearings are not used, some form of automatic greaser or oiler

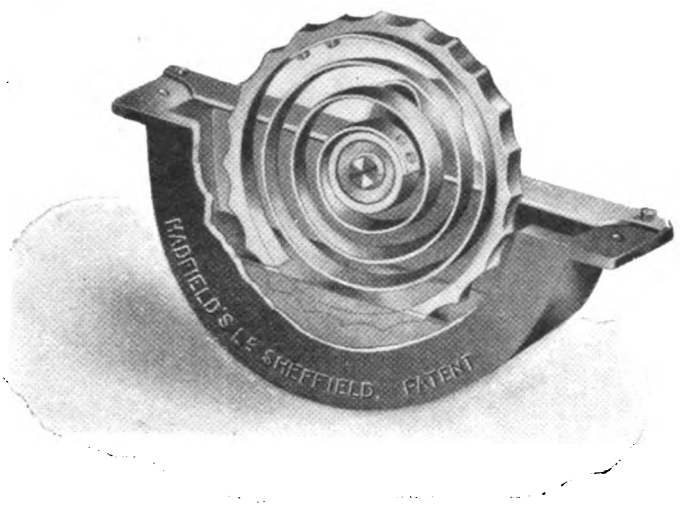

Fig. 1089.—Tub Axle Greaser.

is usually adopted. These are placed on each side or between the rails in such a position that when the tub axle passes, it depresses a wheel mounted on a spring in the case of a solid lubricant, and a piston or plunger in the case of a liquid lubricant. Fig. 1089 shows Salter's patent greaser as made by Messrs. Hadfield's, which consists of a semi-circular cast iron trough containing the lubricant, and which is set below the rails. A corrugated steel rim is mounted upon a pin passing through the two sides of the trough by means of a spiral spring, as shown, so that as the axles pass over the rim they slightly depress it and at the same time revolve it. The corru-

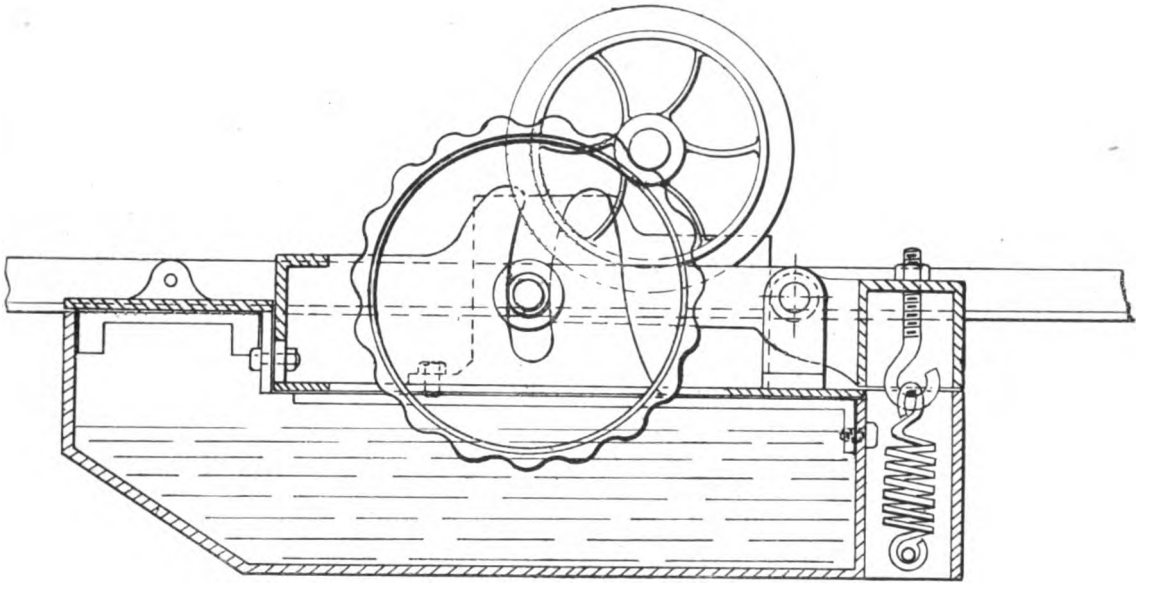

FIG. 1090.—EVANS AND DODD'S PATENT GREASER.

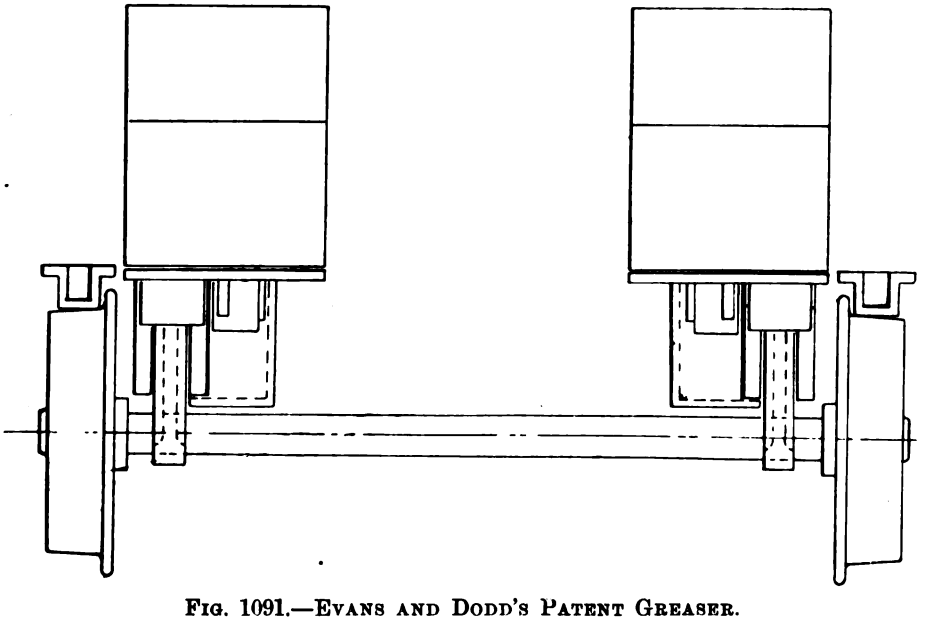

FIG. 1091.—EVANS AND DODD'S PATENT GREASER.

LIBRARY OF THE UNIVERSITY

gations are filled with grease, which is received by the axle as it passes over. Dunford and Emen's patent is somewhat similar, except that the ring is carried upon four helical springs, upon pins, which fit into sockets attached to the boss. Figs. 1090 and 1091 show Evans and Dodd's patent greaser, in which the revolving wheel is held on a pivoted arm, and moves up and down in a slot as shown in fig. 1089. the other end of the arm being secured to a helical spring, the tension of which may be easily adjusted.

The foregoing types of greasers are principally used for solid lubricant.

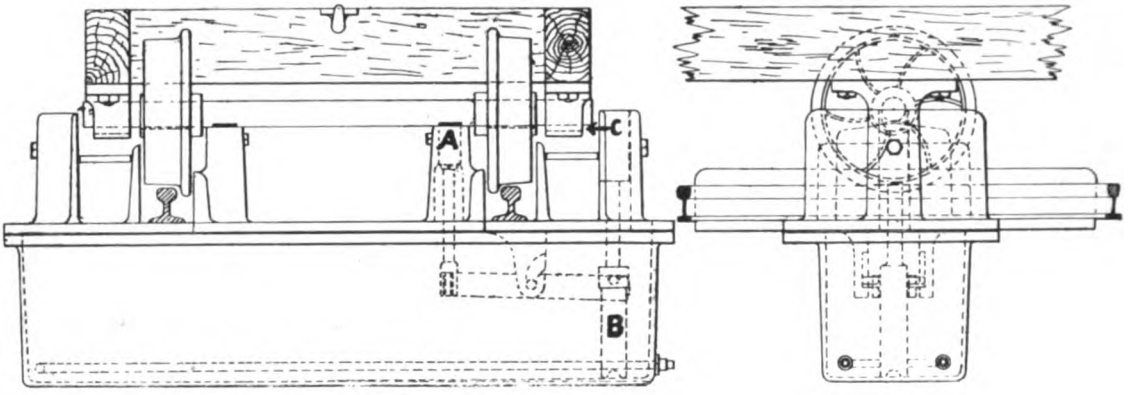

FIGS. 1092 AND 1093.—ABBOTT'S PATENT LUBRICATOR.

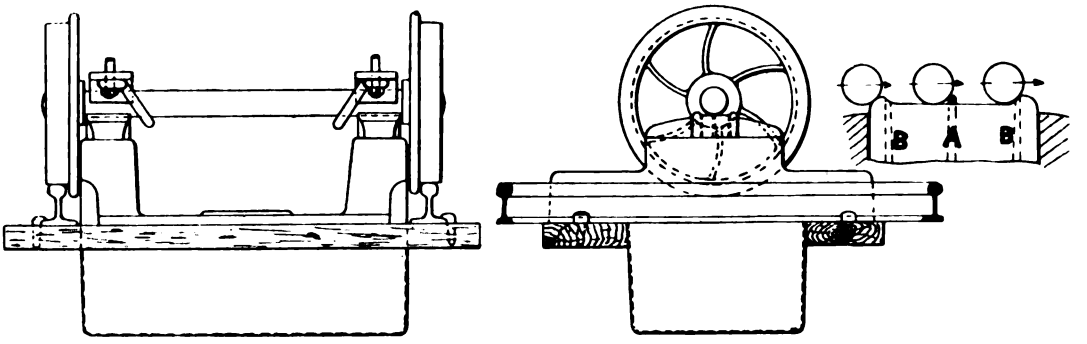

FIGS. 1094 AND 1095.—ABBOTT'S PATENT LUBRICATOR.

Mr. Abbott's automatic lubricator, however, is designed for oil, and, as shown in figs. 1092 and 1093, consists of a box containing the lubricant, and in which is placed the small pump B, which is worked by the lever and plunger A, the top of which is shaped like a double-inclined plane, so that as the tub axle passes over it the plunger is depressed. The pump piston and rod is hollow and fixed, terminating at a small orifice at C through which a small stream of oil is forced just as the axle passes that

point. As the plunger A, therefore, is pressed down, the pump barrel B is lifted, closing the valve in the bottom, and thus forcing the oil up the plunger rod. The arrangement shown is for outside bearings, but figs. 1094 and 1095 show an arrangement for inside bearings, in which the plunger and pump are combined. In this case the plunger is depressed, and the oil or semi-solid grease forced up the orifice A (see small sketch), but as the axle passes off, the surplus grease is gathered at the edge of the plunger, and is returned to the lubricant box by the orifices B. These lubricators are made in many different patterns, to suit the arrangements of wheels and axles, and are applicable to axles upon which the wheels run loose. In some cases a steam coil is fitted to the lubricator where a semi-solid lubricant is used, to keep it thin enough to pass readily through the pump.

3. In self-acting haulage, the full tubs in descending haul the empty ones up an incline, and the inclination therefore must be sufficiently steep to enable the weight of the full set to overcome all frictional resistances, in addition to the weight of the empty set and rope. The resistances to be overcome will include (*a*) friction of axles, (*b*) rolling friction or friction between wheels and rails, (*c*) friction of rope rollers, (*d*) friction of brake wheel journals, (*e*) resistance to rope bending around pulley, and (*f*) resistance of the air.

Of these (*a*) may be determined by formulæ (1), and as (*b*) is usually very small the co-efficient of 0·1 in formula (1) will include (*b*). The friction of the rollers (*c*) may also be determined from the same formulæ, taking W as the weight of the roller and spindle plus a portion of the rope; D, diameter of roller, and d diameter of spindle. The brake wheel shaft usually runs in properly lubricated brass steps, and the friction may be also determined from (1) taking μ as 0·07, or from

$$F = \pi\ d\ \mu\ W. \tag{3}$$

Where d = diameter of shaft in feet,
μ = co-efficient of friction, 0·07,
W = total weight including weight of wheel and weight upon the rope in pounds.

F being the friction or work lost in one turn, the total friction F_T or total work lost being

$$F_T = \pi\ d\ \mu\ W\ n \tag{4}$$

where n = the number of revolutions; and horse-power lost,

$$\text{H.P.} = \frac{\pi d \mu W n}{33{,}000} \tag{5}$$

when n = number of revolutions per minute. As for (*e*) this depends upon the diameter of the rope-wheel and flexibility of the rope, and consequently the wheel should be kept as large in diameter as possible, but as a rule is considered so small as to be negligible, though with a heavy, stiff rope passing over a small badly-

designed pulley the strains set up may be serious, and is a point which requires experimental investigation. If δ be the diameter of each wire composing the rope, D the diameter of the pulley in inches, then

$$\rho = \frac{f \times \cdot 098\,\delta^3}{\cdot 7854\,D} \times n \times N \qquad (6)$$

Where ρ = resistance to bending in pounds,
and n = number of wires in the rope,
and N = number of coils on pulley,
and f = elastic strength of the material, 250,000 for tempered steel wire, 50,000 for iron wire.

The diameter D of the drum or pulley may be obtained from formulæ either (*a*) or (*b*) given on page 130, Chapter II. (*f*) will, of course, depend upon the area of the end of the tub, the area of the passage it passes through, and the velocity of the air current, but ordinarily is of so little moment that it is not worth taking into account.

In a self-acting inclined plane, then, the net weight of coal W acted upon by gravity must overcome the total resistance R made up of $(a + b + c + d + e + f)$ + weight due to rope.

If W = net weight of coal,
w = net weight of tub,
R = total resistance,
r = weight of rope,
L = length of inclined plane in feet,
H = vertical height in feet,
l = length of base of plane in feet.

Then
$$L = \sqrt{H^2 + l^2} \qquad (7)$$
$$H = \sqrt{L^2 - l^2} \qquad (8)$$
$$l = \sqrt{L^2 - H^2} \qquad (9)$$

and gradient
$$G = \frac{H}{l} \qquad (10)$$

In order that the full set may exactly balance the empty one, the gradient must be such that the net weight of coal will be equal to the friction and weight due to the rope, or

$$\frac{(W + w)\,H}{l} = R + \frac{(w + r)\,H}{l},$$

but as the tubs balance, and $\frac{H}{l} = G$, the equation becomes

$$(W - r)\,G = R \qquad (11)$$

and
$$\frac{R}{W - r} = G \qquad (12)$$

and
$$W - r = \frac{R}{G} \qquad (13)$$

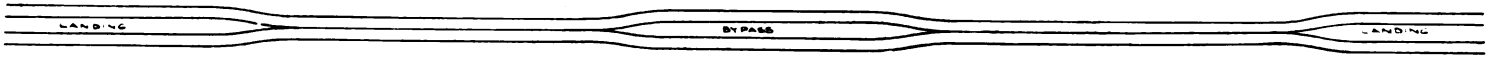

FIG. 1097.—RAILS FOR SELF-ACTING INCLINE.

LIBRARY
OF THE
UNIVERSITY
OF

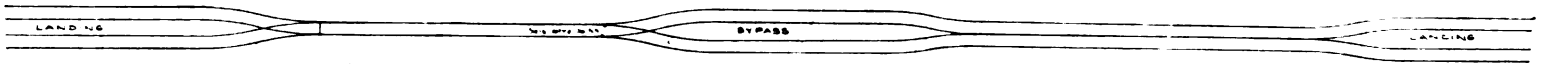

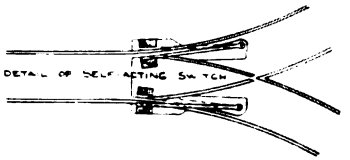

FIG. 1096.—SELF-ACTING INCLINE.

Strictly speaking this is scarcely correct for all positions on the inclines, as to the transference of the rope from one side to the other is not taken into account, but for all practical purposes this point may be neglected. It is evident r can only be determined after l has been obtained, and the same of course applies to the friction of the rollers. As, however, r is usually small, and the friction of the rollers

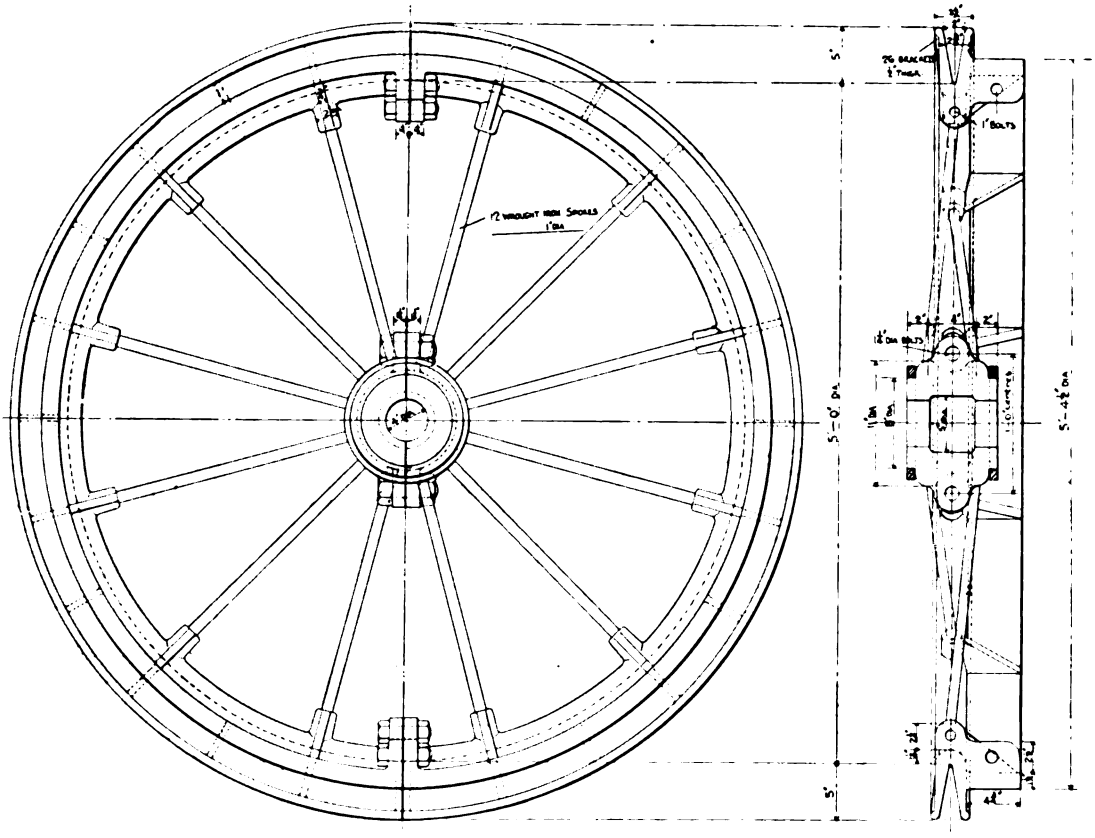

FIG. 1098.—INCLINE BRAKE WHEEL.

and rope wheel will probably not exceed the friction of the tubs, a near approximation may be obtained from

$$\frac{2\,R}{W} = G \qquad (14)$$

where R = the friction of the tubs.

The rails for self-acting inclines are arranged usually as shown in figs. 1096 and 1097. Two separate roads are without doubt the best arrangement, as though the three-line road gets rid of points, it is almost as expensive to put down, and requires

Fig. 1099.

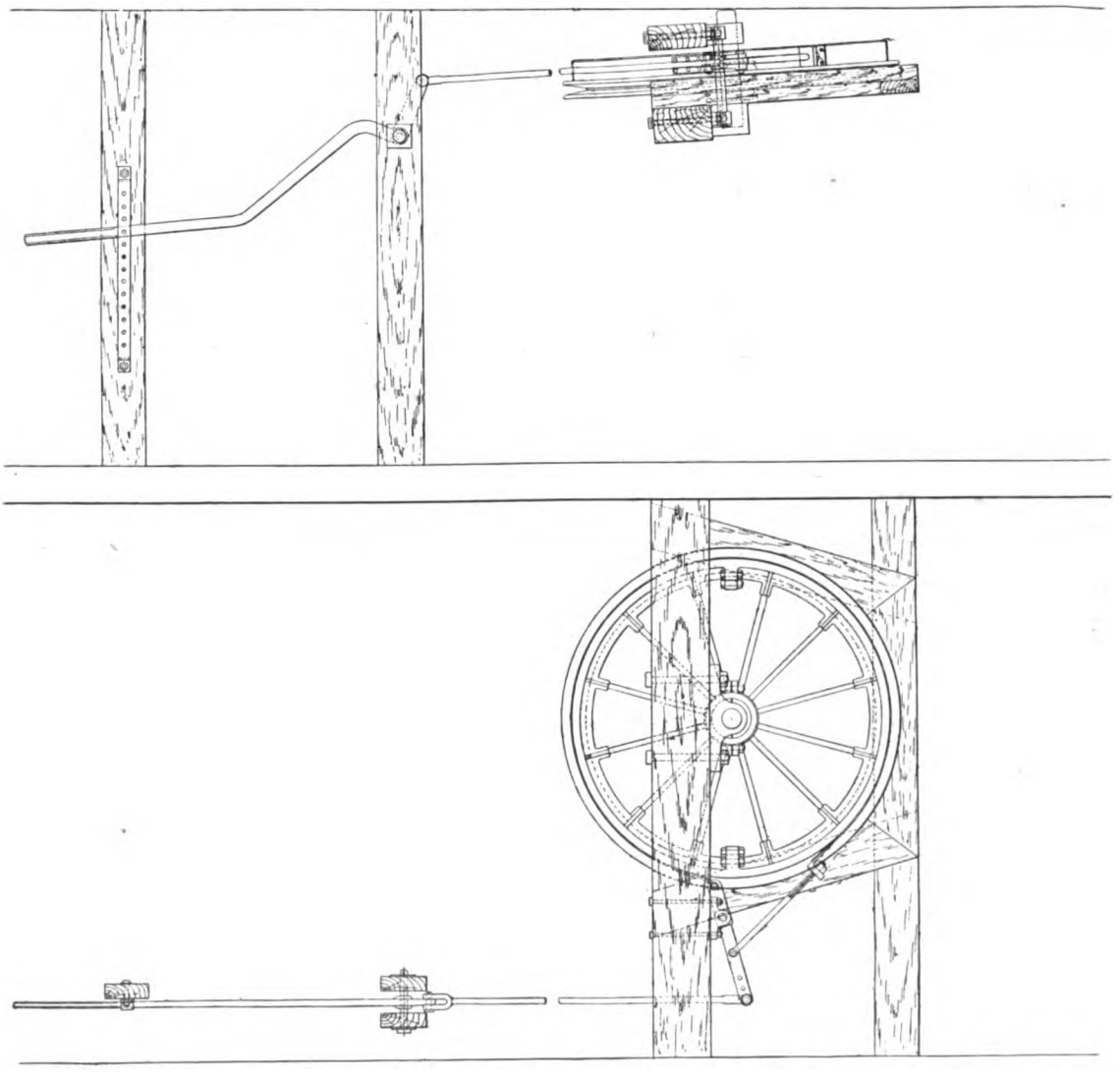

Fig. 1100.

Figs. 1099 and 1100.—General Arrangement of Incline Brake Wheel.

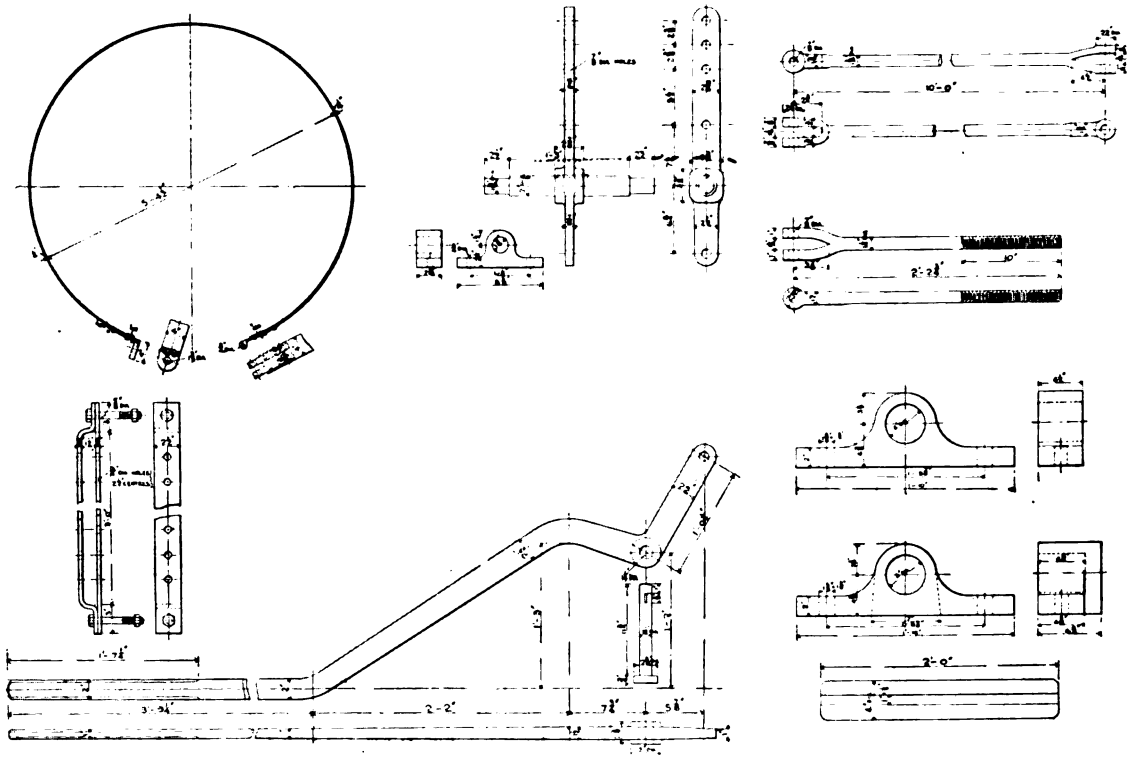

FIGS. 1101 TO 1110.—DETAILS OF INCLINE BRAKE WHEEL.

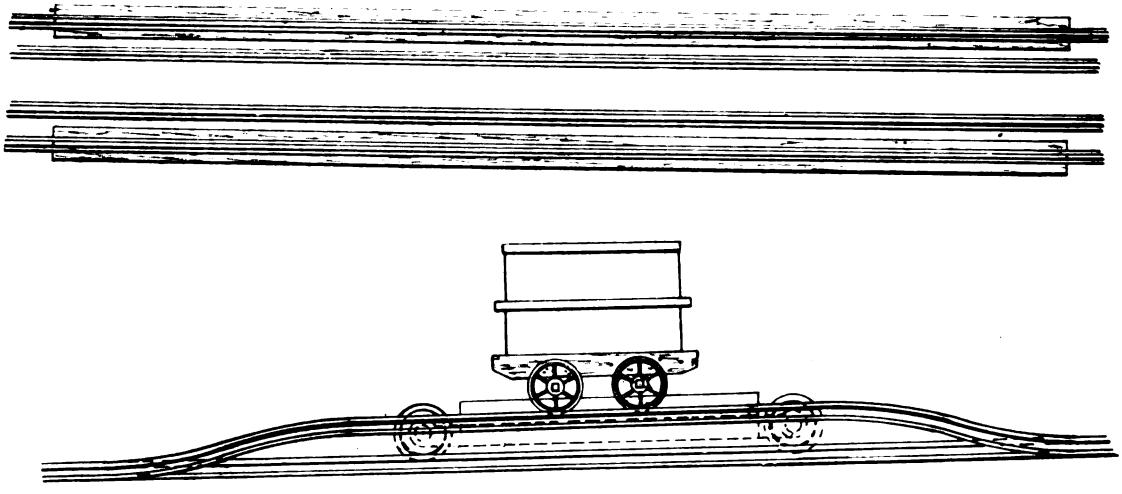

FIG. 1111 AND 1112.—BALANCE WEIGHT INCLINE.

a special construction at the V joint. A single road with self-acting points is the cheapest, but of course the single line can only be applied below meetings, as three rails at least must be laid above. In order to get rid of points which are not self-acting, special automatic shifting points are used below meetings, as shown in the small detail, and the only objection to a single road with a by-pass is the danger of the sets getting off at the points. With long, easy and well-constructed switches, however, and a carefully constructed road, this trouble should be reduced to a minimum.

A "jig" consists of a wheel fixed either by a chain or a bolt to a vertical post, provided with a brake, which is used for working small inclines from the face to the haulage road. They are worked either by chain or rope—usually the former

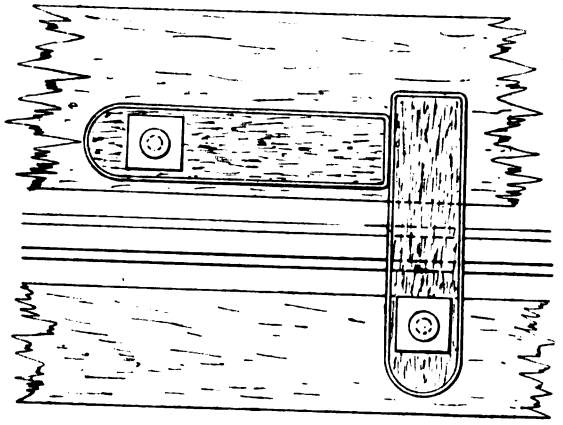

FIG. 1113.—CHOCK OR TUB STOP.

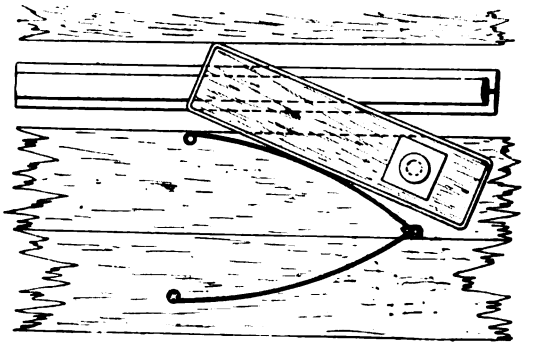

FIG. 1114.—SPRING CHOCK.

where the distance is short—and one full tub is lowered at a time. Longer inclines are worked by a rope passing around a brake pulley fitted with a band brake. The rope may either be wrapped around the pulley two or three times, or fit into a V groove as shown in fig. 1098, which shows the detail of an incline pulley in which the rope merely passes half round. Figs. 1099 and 1100 show the general arrangement of the pulley, and figs. 1101 to 1110 show details of the brake gear. Where the incline is long, and the sets consist of a comparatively large number of tubs, a single or a pair of drums provided with powerful brakes should be used, with separate ropes for each set. As the rope is used to check the speed of the descending full set, the working load should be taken as $\frac{W + w}{L}$, and allowing a factor of safety of 10, the rope may be chosen from Table I., Chapter V., and the diameter of the drum or wheel from either (*a*) or (*b*) (*see* Chapter V.)

Under exceptional circumstances, it is necessary to work the incline with a balance weight, and a single road, or rather a double road, but one within the other. The tubs run on the outer rails, and a long thin balance weight mounted on low wheels runs on the inside rails. The balance weight must be low enough to pass under the axles of the tubs, otherwise one set of rails must be raised at meetings as shown in figs. 1111 and 1112.

Where the angle is so steep that the coal would be spilled from the tub, the latter must be run on a special carriage, and for cases where the inclination varies Mr. Crawford has introduced a carriage in which the tub is placed on a rocking cradle resting on rollers, so that it always retains a vertical position.

It is necessary at the top of the incline to have a block or chock against which the wheels of the tub rest until the set is ready. The ordinary form is shown in fig. 1113, while a spring chock is shown in fig. 1114. The objection to the former is that it has to be knocked out by hand, the spring chock being only used to prevent tubs running back on inclines or landings where the tubs only run in one direction. A better arrangement consists of a tub-controller, or "lock catch"—Hollings' patent, made by Messrs. Hadfields—being shown in figs. 1115 and 1116, in which a single arm is held by a ratchet. The ratchet is released by rods and levers from a distance. To minimise the breakages due to tubs running back, self-acting stops are used, as shown in fig. 1117, which, however, are not applicable to self-acting inclines, as the tubs run alternately in each direction over the same line. One method of preventing damage by a runaway tub or tubs is shown in fig. 1118. In this case the first tub is provided with a bull which is kept up by a small chain passing over the set, by means of small pulleys set in frames projecting above the tub, and attached to the main chain, so that should the rope or any of the chains break, the bull would fall and stop the set from running amain. A detail of the bull and pulley on first tub is shown in fig. 1119.

In order to prevent accidents due to coupling chains breaking when sets are running upon steep inclines, an auxiliary chain couples the last tub to the rope by passing either over—as shown in fig. 1118—or under the tubs.

Brakes are seldom used on colliery tubs in this country, though they are often applied to tubs abroad. Mr. Adams, of Ilkeston, has recently invented an automatic braking arrangement, consisting of a star wheel fixed to each axle, in which a slide or tongue engages through the action of springs. Under normal conditions the wheels are locked when the tub is standing, and are kept out by hand levers when it is desired to move the tub by hand. When being hauled, however, the tension on the drawbar overcomes the springs and keeps the tongue out of contact with the star wheel.

In working steep seams where one incline serves different levels, lengths of

Fig. 1115.

Fig. 1116.

Figs. 1115 and 1116.—Hollings' Patent Tub Stopper.

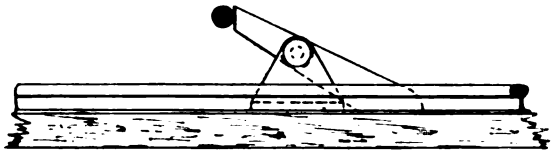

Fig. 1117.—Self-Acting Tub Stopper.

Fig. 1118.—Arrangement of Safety Over-Chain.

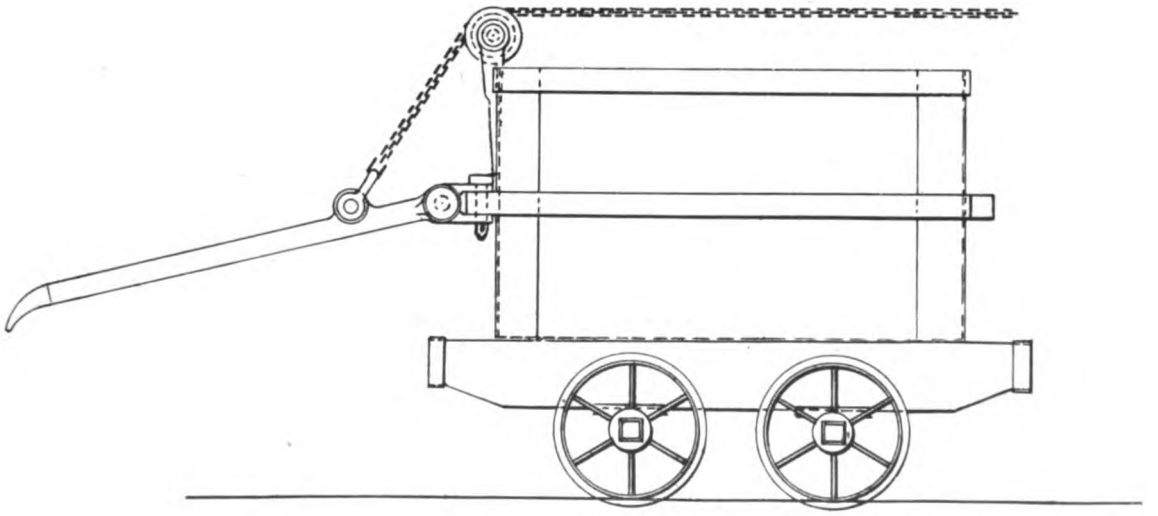

Fig. 1119.—Bull on End of Tub.

LIBRARY OF THE UNIVERSITY OF CALIFORNIA

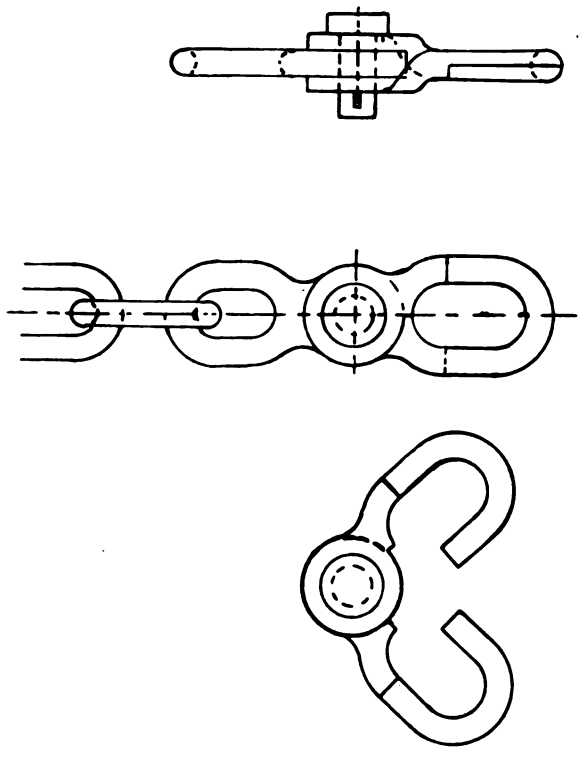

FIG. 1120.—OPEN SHACKLE OR SPLIT LINK.

FIG. 1121.

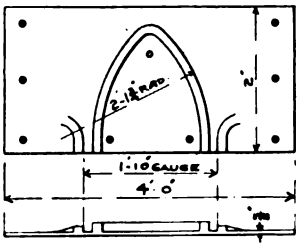

FIG. 1123.

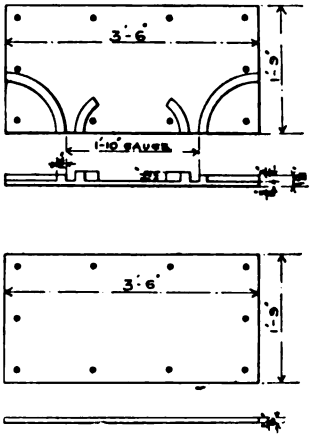

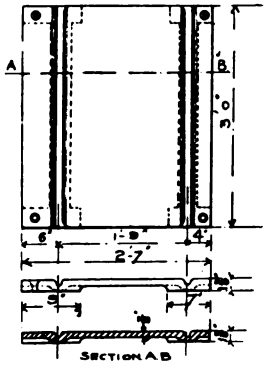

FIG. 1124.—GROOVED FLAT SHEET.

FIG. 1122.

FIGS. 1121 TO 1123.—GUIDE AND PLAIN FLAT SHEETS.

chain connect the various levels, the connection being made by means of a screw shackle or a split link, as shown in fig. 1120. If the incline be very steep, the road must be continued over each landing by a pair of loose rails, or, if the inclination will allow it, a flat path is formed by flatsheets, the tub from a higher level simply running over them. These are shown in figs. 1121 to 1123, being respectively a point guide flatsheet, which receives the tub from the upper level, a plain flatsheet, on which the tubs are turned, and an open guide flatsheet, which receives the tub after being turned on the plain flatsheets. Another form of flatsheet is shown in fig. 1124, where the flanges of the tub wheels run in grooves, which allows a tub to be easily run over at right angles to the grooves without breaking the continuation of the road. Point guide flatsheets are often constructed by bending a piece of angle iron in the form of the point, and riveting this to the plain sheet. Flatsheets are made of cast iron or cast steel, the latter, though more expensive, being more durable.

4. Secondary mechanical haulage usually consists of a single or pair of drums, worked either by a small compressed air engine or an electric motor. Where a single district is worked to the dip, and the full tubs have to be hauled up the incline, a single drum will probably be all that is required, a full set and an empty set being raised and lowered alternately, in which case a single road only is required. Another method is to consider the incline similar to a self-acting one, worked with a pair of drums, which, however, are actuated by a compressed air or electric motor. In the first case it is evident the motor must be large enough to balance the full weight due to the rope, coals, tubs and friction. The empty set is run down by the brake on the drum. With the second method the motor has only to balance the weight of rope, coal, and friction, as the tubs are balanced; consequently there is both a reduction in the size of the motor required and in the power expended, as it is evident, though no power is used during the descent of the empty set, its energy is wasted in the brakes, which might have been usefully expended in raising the tubs containing coal.

Auxiliary haulage may also be arranged on the main-and-tail, or endless rope or chain systems, though as a rule it is limited to the direct or main-and-tail systems, the latter being adopted when the road is either level or undulating. Often their use is more or less temporary, and in order that they may be readily transported the whole machine is often mounted upon wheels.

The motive power is usually either compressed air or electricity, steam being, for obvious reasons, out of the question, and there is now no question as to the superiority of electricity over compressed air. Where, however, an air compressing plant is already installed for the purpose of working other machines, or where the use of electricity is considered unsafe, a compressed-air motor would naturally be

employed, but in all cases where electric driving can be adopted it is much to be preferred to compressed air, on account of its greater flexibility and efficiency.

The power required will be that necessary to raise the coal and tubs and overcome friction, and if

W = unbalanced load in pounds,
D = diameter of drum in feet,
G = gradient,
P = air pressure in pounds per square inch,
A = area of cylinder in square inches,
S = length of stroke in feet,
d = diameter of cylinder in inches,
η = ratio of gearing,

then it is evident that the moment of the load acting on an arm equal to the radius of the drum will be

$$M = W \times \frac{D}{2},$$

and for the engine (*see* Chapter V.)

$$M = P \times A \times \frac{S}{2},$$

and equating these

$$W \times \frac{D}{2} = P \times A \times \frac{S}{2}, \tag{15}$$

As, however, this does not allow for friction, acceleration, &c., it will be necessary to introduce other factors; and if

F = total friction = $a + c$ (*see* page 509),
e = efficiency of the machine,

then

$$(W + F)\frac{D}{2} = P \times A \times \frac{S}{2} \times \eta \times e, \tag{16}$$

which may be written

$$(W + F)D = PAS\eta e, \tag{17}$$

from which

$$A = \frac{(W + F)D}{P \times S \times \eta \times e}, \tag{18}$$

and

$$d = \sqrt{\frac{A}{\cdot 7854}}. \tag{19}$$

If, however, S be expressed in terms of d (*see* Chapter V.), d may be directly determined from

$$d\sqrt[3]{\frac{(W + F) \times D}{P \times \cdot 7854 \times \frac{r}{12} \times \eta \times e}}. \tag{20}$$

Where r = the ratio of length of stroke to piston diameter $\frac{S}{d}$ (S in inches or d in feet), and which would give the diameter of cylinder which would just start the set

There is, however, the question of speed to be considered, and it will be necessary to take into account the force required for acceleration.

If C = total work in foot pounds required for acceleration,
E = space moved over in feet during acceleration period,
T = time occupied in seconds,
m = number of revolutions of the drum,

then the work in foot-pounds during this period will be

$$fp = C + (W + F)E, \tag{21}$$

and the work done by the engine will be

$$fp = 4 \times P \times d^2 \times \cdot 7854 \times \frac{rd}{12} \times m \times \eta \times e, \tag{22}$$

and as there are two engines, the work done by each engine will be half this amount. Expressing these as an equation,

$$C + (W + F) \times E = 4 \times P \times d^2 \times \cdot 7854 \times \frac{rd}{12} \times m \times \eta \times e,$$

from which

$$d = \sqrt[3]{\frac{C + (W + F) \times E}{4 \times P \times \cdot 7854 \times \frac{r}{12} \times m \times \eta \times e}} \tag{23}$$

Taking the case of a single road haulage, the unbalanced road will consist of the weight due to the coal, tubs, rope and friction, and if

W_1 = net weight of coal,
w = net weight of tub,
R = weight of rope,
V = velocity in feet per second,
Y = energy required to put rollers in motion,

then

$$W = F + \frac{W_1 + w + R}{L} = G(W_1 + w + R) + F \tag{24}$$

and

$$C = \frac{(W_1 + w + R) \times V \times E}{L \times 32 \cdot 2 \times T} + Y \tag{25}$$

$$= \frac{(W_1 + w + R) \times V^2}{L \times 64 \cdot 4} + Y \tag{25a}$$

The piston speed of the engine will depend upon the number of the revolutions of the drum per minute, $N \times \eta$, and N will again depend upon its diameter.

$$N = \frac{V}{\pi D} \times 60\,\eta = 2\,\frac{m}{T} \times 60\,\eta = 120\,\frac{m}{T}\,\eta \tag{26}$$

and as there are two η strokes of the engine to one revolution of the drum,

$$\text{Piston speed} = 2 \times S \times N \times \eta = 240 \times S \times \frac{m}{T} \times \eta.$$

The piston speed of these small engines may be taken as 500 to 800 feet per minute, or even higher.

The maximum brake horse power required at the drums to haul the set will be

$$\text{B.H.P.} = \frac{C + (W + F)E}{275\,T.} \tag{27}$$

and the maximum indicated horse-power developed by the engines will be

$$\text{I.H.P.} = \frac{4 \times P \times S \times A \times m \times \eta}{275 \times T} \tag{28}$$

or taking the piston speed in feet per minute,

$$\text{I.H.P.} = \frac{2 \times P \times A \times 240 \times S \times m \times \eta}{33{,}000 \times T} \tag{29}$$

The mechanical efficiency will be

$$e = \frac{C + (W + F) \times E}{4 \times P \times A \times m \times \eta} = \frac{\text{B.H.P.}}{\text{I.H.P.}} \tag{30}$$

In electrical haulage it is required to find the maximum B.H.P. the motor is required to give out, which may be determined from (27) for the drums, and the actual H.P. to be developed by the motor will be

$$\text{Actual H.P.} = \text{B.H.P.} \times e \tag{31}$$

where e = efficiency of gearing.

The application of the formulæ may best be shown by an example: Suppose it is required to haul a set of thirty tubs with 12 in. diameter wheels and 1½ in. diameter axles up an incline, the gradient being 1½ in. per yard, against the load. Each tub carries 12 cwt. of coal and the tub weighs 8 cwt. The length of the plane is 2,000 yards, and the rollers are 6 in. diameter, with ¾ in. spindle, and weigh 20 lb. each, and are spaced 10 yards apart. Find the dimensions of the cylinders for a compressed air motor, the pressure of the air being 60 lb. per square inch, and the actual horse-power of an electric motor?

$$W_1 = 30 \times 12 \times 112 = 40{,}320 \text{ lb.}$$
$$w = 30 \times 8 \times 112 = 26{,}880 \text{ lb.}$$

The diameter of the tub wheels are 12 in. and the axles 1½ in., the friction of the tubs therefore from (1)—

$$F_t = \frac{1{\cdot}5 \times 0{\cdot}1 \times 2{,}240}{12} \times 30 = 840,$$

and for the rollers, taking the rope as weighing 5·9 lb. per fathom,

$$F_r = \frac{0{\cdot}75 \times 0{\cdot}1 \times (20 + 29{\cdot}5)}{6} \times 200 = 120 \text{ lb.},$$

and

$$F = 840 + 120 = 960 \text{ lb.},$$

$$G = \frac{1{\cdot}5}{36} = \tfrac{1}{24} \text{ or } 1 \text{ in } 24,$$

and

$$W = \frac{67{,}200 + 5{,}900}{24} = 3{,}046 \text{ lb.},$$

and the strain upon the rope, therefore, will be 3,046 + 120 + 840 = 4,006 lb., and a suitable rope will be found from Table I. to be 2½ in. circumference, weighing 5·9 lb. per fathom, made from patent steel, the wire being drawn to 90 tons per square inch.

Let it be further assumed that the journey must be made in eight minutes,

or $$\frac{2{,}000 \times 60}{1{,}760 \times 8} = 8\tfrac{1}{2} \text{ miles per hour, say.}$$

The maximum speed, however, will be more than this, as the set must start from rest, and some little time must be occupied before getting into full speed, or for "acceleration." Suppose the time allowed for acceleration be sixty seconds, and the same time be allowed for "retardation," leaving six minutes for the full speed period, then

$$V = \frac{6{,}000}{\frac{60}{2} + 360 + \frac{60}{2}} = \frac{6{,}000}{420} = 14{\cdot}285 \text{ ft. per sec.,}$$

and the space moved over during each of these periods will be (*see* Chapter V.)

Acceleration	$E = \frac{1}{2} VT =$	428·7 ft.
Full speed period	$E = V \times T =$	5,142·6 ft.
Retardation	$E = \frac{1}{2} VT =$	428·7 ft.
		6,000·0

and the acceleration $a = \frac{14{\cdot}285}{60} = 0{\cdot}238$ ft. per second per second.

$$C - Y = \frac{(40{,}320 \times 26{,}880 \times 5{,}900) \times 14{\cdot}285^2}{24 \times 64{\cdot}4}$$

$$= 953 \text{ nearly.}$$

To this must be added the energy required to put the 200 rollers in motion, which may be obtained from the well-known formulæ $\frac{WV^2}{2g}$, and consequently taking the radius of gyration as (*see* (19) Chapter V.)

$$y = 3\sqrt{\tfrac{1}{2}} = 3 \times {\cdot}707 = 2{\cdot}1$$

$$v = \frac{2{\cdot}1 \times 14{\cdot}285}{3} = 10 \text{ ft. per second,}$$

and $$Y = \frac{200 \times 20 \times 10^2}{64{\cdot}4} = 6{,}211 \text{ lb.}$$

Hence

$$C + Y = 953 \times 6{,}211 = 7{,}164 \text{ foot pounds.}$$

The available pressure at the stop valve of the engine is 60 lb. per square inch, and taking three-fourths of this as the average mean pressure on the piston, the effective leverage of the crank as 0·8, and the diameter of the drum as 5 ft., geared to the engine with a ratio of 8 to 1; and e as 0·7.

$$m = \frac{1}{2} \times \frac{14{\cdot}285 \times 60}{3{\cdot}14 \times 5} = 27{\cdot}3$$

Then from (23), taking S as $2d$,

$$d \sqrt[3]{\frac{7{,}164 + (3{,}046 + 960) \times 428{\cdot}7}{4 \times 45 \times 0{\cdot}7854 \times \frac{2}{12} \times 0{\cdot}8 \times 27{\cdot}3 \times 8 \times 0{\cdot}7}} = 8{\cdot}4$$

say $8\frac{1}{2}$ in. diameter cylinders with 18 in. stroke.

The piston speed will be $120 \frac{23{\cdot}7}{60} \times 8 = 436{\cdot}8$ ft. per minute.

For the electric motor the brake horse-power required at the drum will be from (27)—

$$\text{B.H.P.} \frac{7{,}164 + (3{,}046 + 960) \times 428{\cdot}7}{275 \times 60} = 105 \text{ nearly.}$$

and taking the efficiency of the gearing as 0·85, actual horse-power $= \frac{105}{0{\cdot}85} = 124$, nearly, say, 125-brake horse power to be given at the motor pinion wheel.

It is often at least interesting, if not necessary, to know the velocity and time required for the descent of a set of tubs. If Q = the total kinetic energy = W H, where W = total weight in motion,

then
$$Q = F \times L + \frac{W v^2}{2g} \tag{32}$$

or
$$Q - F \times L = \frac{W v}{2g},$$

and
$$v = \sqrt{\frac{Q - F L \times 2g}{W}} \tag{33}$$

which will be the velocity at the end of the plane. The set, of course, starts from rest and will move with a constant acceleration, and in order to determine the time it will be necessary to find the acceleration, if

f = accelerating force,
a = acceleration in feet per second,
M = mass of the body $= \frac{W}{g}$
t = time in seconds

then
$$f = G W - F = \frac{H}{L} W - F.$$
$$f = M \times a$$
$$a = \frac{f}{M}$$

and
$$t = \sqrt{\frac{2 L}{a}} \tag{34}$$

Taking the case just given, find the velocity at the foot of the inclined plane and the time required to make the descent, neglecting the friction of the drum bearings.

Here the empty set runs down the plane, so that

$$W = 30 \times 8 \times 112 = 26{,}880 \text{ lb.}$$

and
$$F_t = \frac{1{\cdot}5 \times 0{\cdot}1 \times 896}{12} \times 30 = 336 \text{ lb.},$$

and as the same number of rollers have to be put in motion F_r remains the same. Therefore

$$F = 336 + 120 = 456 \text{ lb.}$$

$$Q = 26{,}880 \times \frac{2{,}000 \times 1{\cdot}5}{12} = 6{,}720{,}000 \text{ foot pounds,}$$

and

$$6{,}720{,}000 = 456 \times 6{,}000 + \frac{26{,}880 \times v^2}{64{\cdot}4}$$

$$6{,}720{,}000 - 2{,}736{,}000 = \frac{26{,}880 \times v^2}{64{\cdot}4}$$

$$3{,}984{,}000 = 417{\cdot}4 \times v^2$$

$$v = \sqrt{\frac{3{,}984{,}000}{417{\cdot}4}} \; 97{\cdot}7 \text{ ft. per second,}$$

or at the rate of approximately 60 miles per hour,

$$f = \frac{26{,}880}{24} - 456 = 664$$

and

$$a = \frac{664}{\frac{26{,}880}{32{\cdot}2}} = \frac{664}{835} = 0{\cdot}8 \text{ nearly,}$$

$$t = \sqrt{\frac{2 \times 6{,}000}{0{\cdot}8}} = \sqrt{\frac{12{,}000}{0{\cdot}8}} \; 122{\cdot}5 \text{ secs.}$$

which shows the necessity for equipping the drum with a powerful brake, and further gives an idea of the enormous strains thrown upon the rope and coupling chains, if a set descending an incline is allowed to get into speed and then be quickly drawn up.

Auxiliary haulage engines are usually geared to the drums through single or double gearing, generally the latter, as it is necessary to keep the engine as small as possible. The drums in all cases should be loose on the shaft, fitted with a powerful band brake—not a half-strap—and connected to the shaft with a good friction clutch. The ordinary jaw or claw clutch is to be avoided, as it is a positive source of trouble, expense and danger. Electric hauling machines are also geared, the motor being usually run at a high speed of from 500 to 1,000 revolutions per minute. In small powers the motor pinion is overhung, and should be of raw hide, gearing into a machine-cut steel spur wheel, the remainder of the gearing being also machine-cut for good work. The latter is a little more expensive, but it pays.

Figs. 1125 to 1128 show different types of single and double drums, geared hauling engines by Messrs. R. H. Longbotham and Co. Limited, all of which are notable for strength, good proportions and compactness. A particularly neat and handy engine by Messrs. Sheppard and Sons, Limited, termed the "Victor," is shown in figs. 1129 to 1131. This consists of two drums arranged in two side frames, extended at the back and enclosing a vertical three-cylinder engine, the crank shaft

of which is fitted with a small pinion, which gears into a large spur wheel keyed to the drum shaft. Each drum is provided with a clutch worked by means of the two levers—one on each side of the engine—as shown. The slide valves are worked from a small crank shaft, alongside the main crank shaft, and driven by the latter by spur gearing; while reversal is effected by turning the handwheel shown on the right in fig. 1131. The crank shafts and gearing are covered in with light sheet steel casing, and, if necessary, the whole engine may be mounted upon wheels for transportation.

Figs. 1132 and 1133 show a double-drum 100 H.P. electric-driven haulage gear, with a three-phase motor, for working a heavy gradient at a speed of five miles per hour, whilst fig. 1134 shows another gear by Messrs. R. H. Longbotham and Co. Limited. The latter, which is from a photograph of a 150 B.H.P. main-and-tail haulage, is particularly strongly built, and it is important to note that the pinion wheel is coupled to the motor spindle by means of a flexible coupling, with a bearing on each side of the pinion. In both cases the bedplate consists of a frame built from rolled steel sections.

Another main-and-tail haulage gear, by Messrs. Clarke, Chapman and Co. Limited, is shown in figs. 1135 and 1135a, the principal feature of which is the clutch arrangement. The drums are loose on the shaft, which is provided with a centre bearing, each drum being provided with a clutch and brake arranged on the outer sides. The brake consists of wood blocks bolted between strong side plates, which are pivoted at the bottom, and connected together at the top with levers and connecting rods, a particularly neat, strong and inexpensive method of construction, though for long and heavy main-and-tail inclines where the brake is constantly on, wood is not suitable, as it heats and takes fire. The clutch, as will be seen from the section in fig. 1135a, consists of a tapered projecting ring cast on the drum side, which fits between the tapered wood rings held in the annular space in the clutch, which is keyed to the shaft. At the bottom of the annular space is a plate, which may be pushed forwards by means of the stud bolts, for adjusting the pressure between the wood rings and the iron ring on the drum. The main shaft is hollow for a distance at the ends, and is fitted with a "pushing" spindle, the connection between this spindle and the clutch boss being made with a cotter pin. This spindle is extended outside the main bearing, where it passes into a box containing a roller thrust bearing, one race being fixed to the end of the pushing spindle, the other being formed on the interior of the box. This box is provided with a screwed spindle, which fits into a nut held by a cross bar supported by two pillars from the main bearing, and an arm which is connected to a hand lever working in a ratchet sector as shown. On moving this lever the box is turned, and through the quick thread on the box spindle is pushed forward, and presses the spindle against the cotter in

PLATE XCVI.

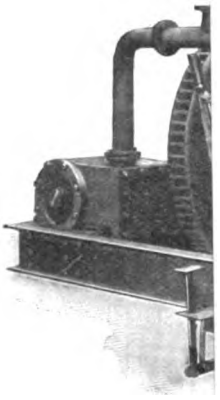

FIG. 1129.

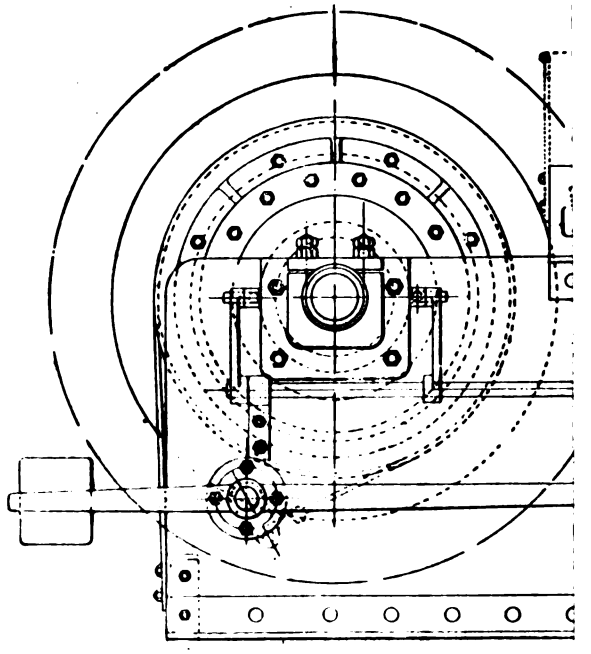

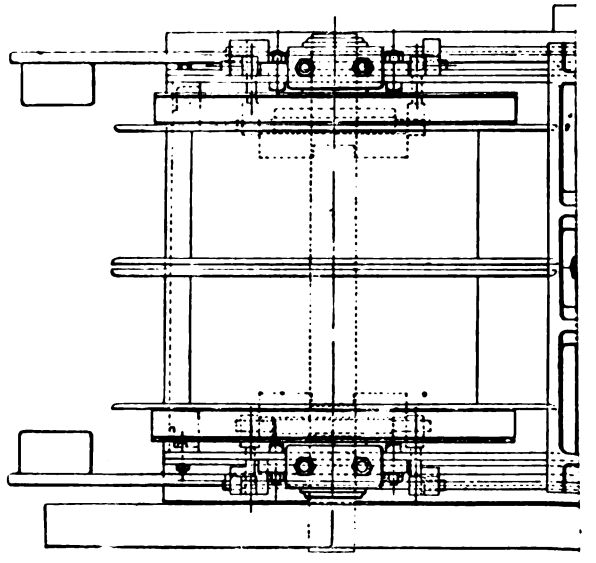

FIG. 1130.

LIBRARY
OF THE
UNIVERSITY
OF

Fig. 1131.

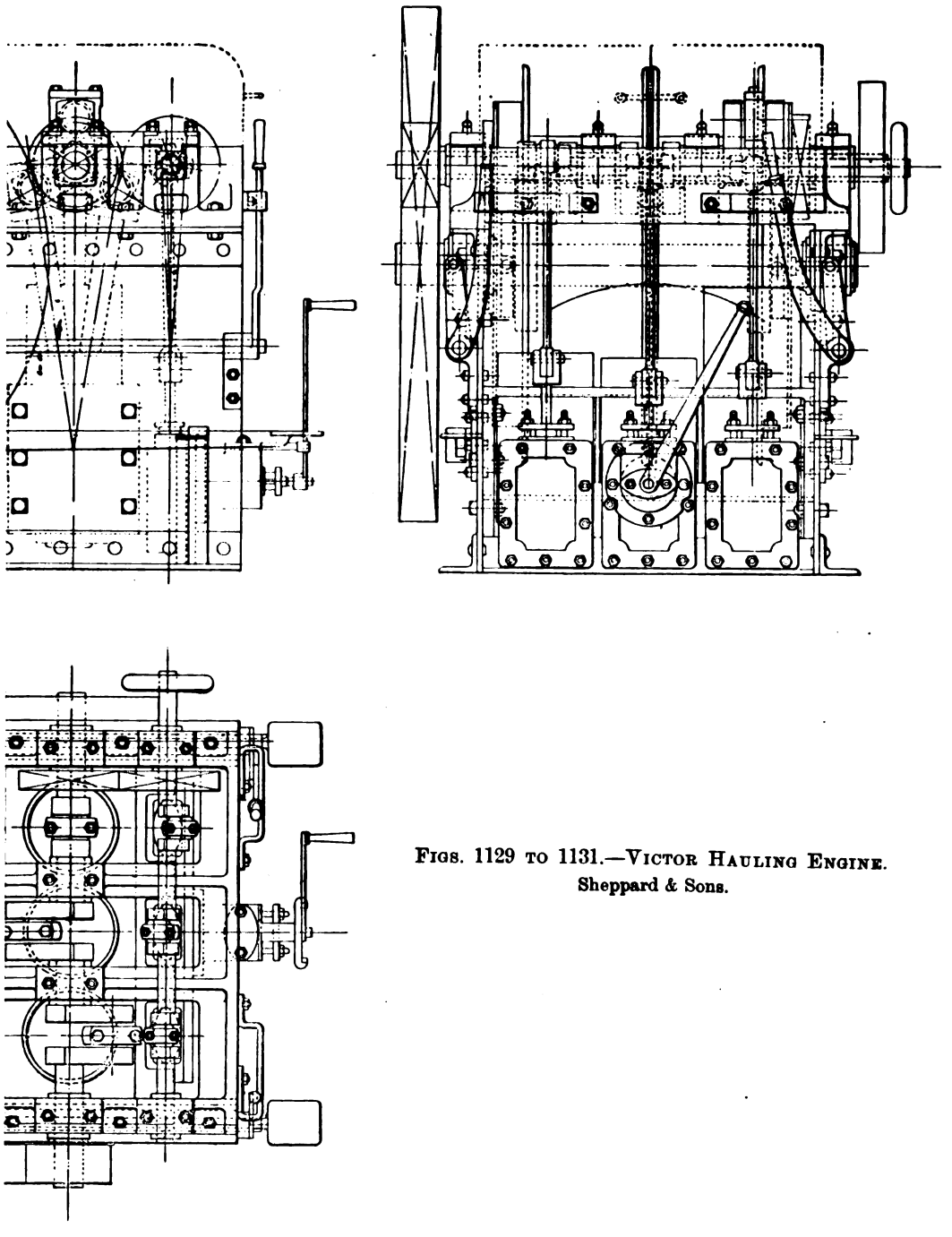

Figs. 1129 to 1131.—Victor Hauling Engine.
Sheppard & Sons.

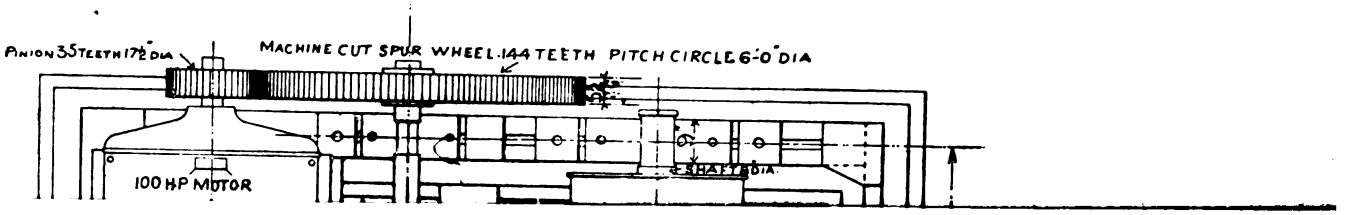

LIBRARY OF THE UNIVERSITY OF

FIG. 1135.

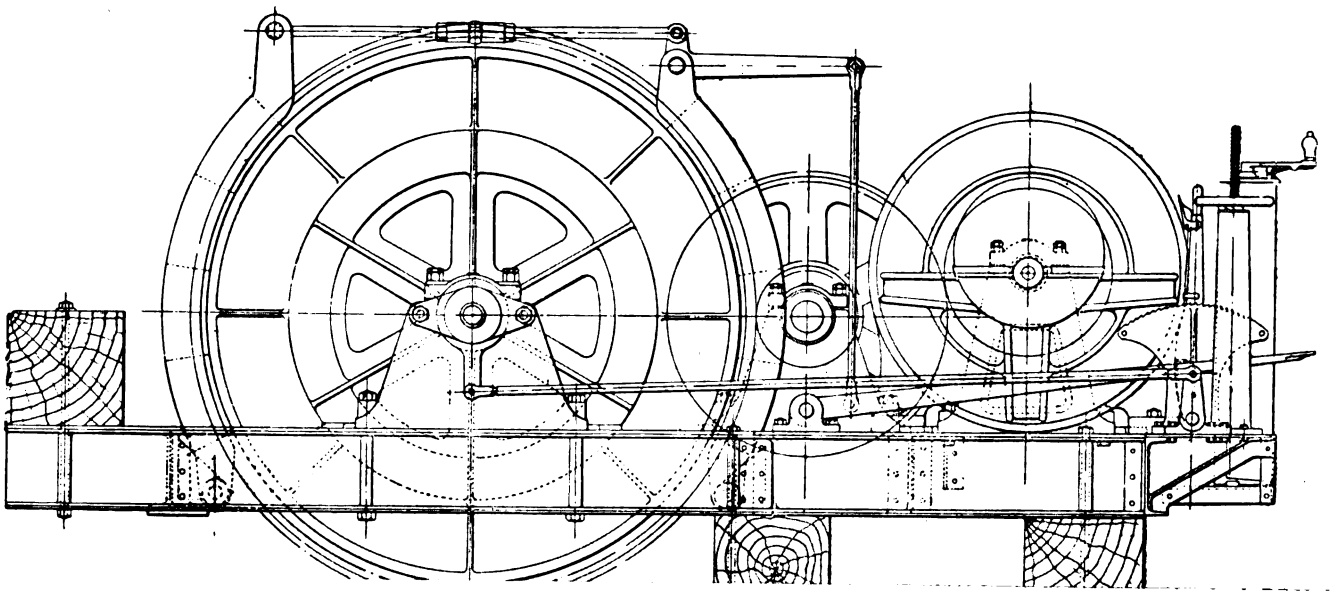

PLATE XCVIII.

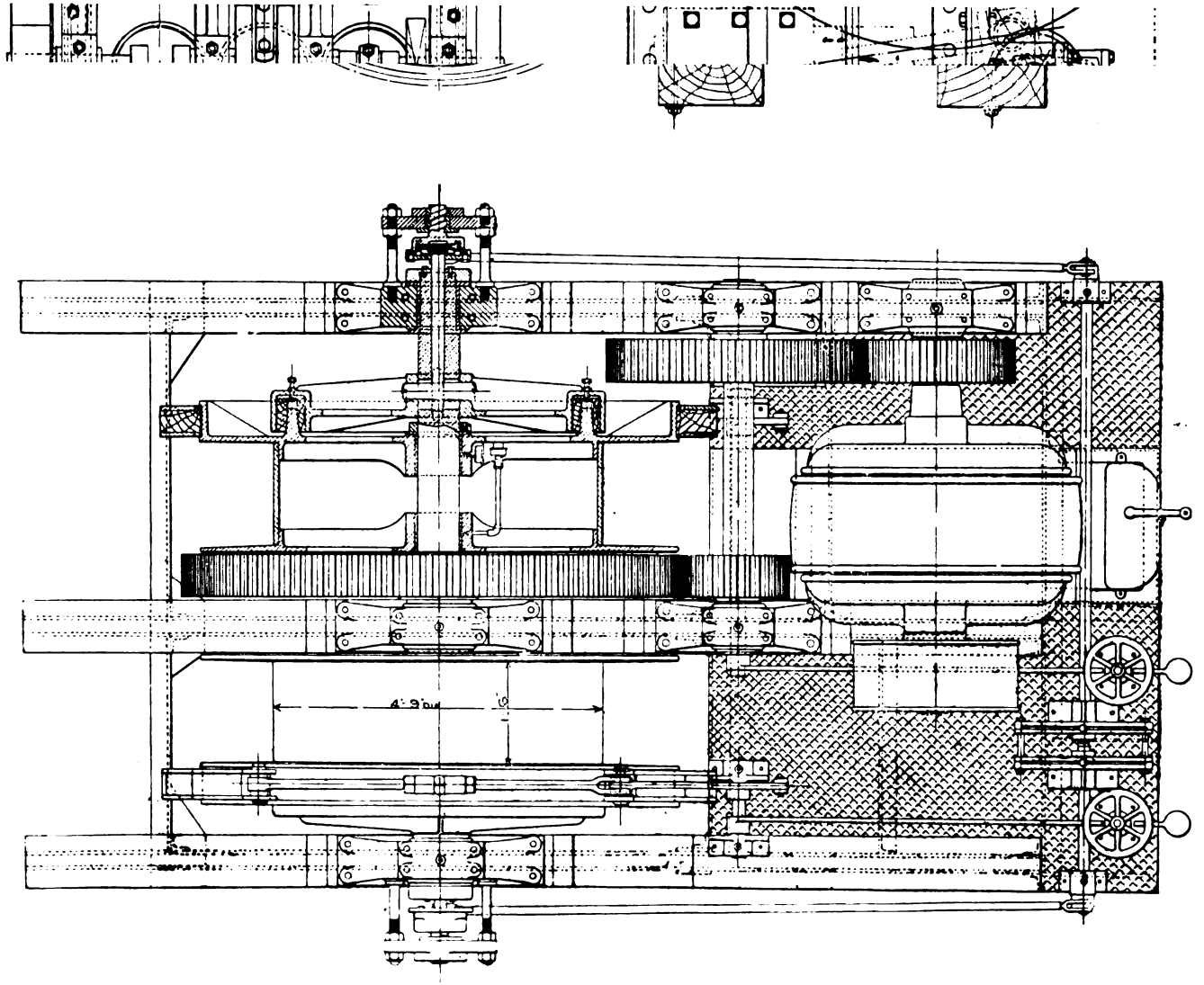

UNIVERSITY OF THE

FIG. 1135A.

FIGS. 1135 AND 1135A.—ELECTRIC HAULAGE GEAR.

the clutch boss, thus pushing forward the clutch on the shaft, and gripping the drum friction ring, while on returning the lever the operation is reversed, and the clutch withdrawn, thus releasing the drum. The necessity for the roller bearing is to reduce the friction between the stationary box and the revolving spindle, which of course turns with the shaft and clutch.

(B.) Main haulage of the main-and-tail system is largely adopted in the north of England and in some of the South Wales collieries, but not to the same extent elsewhere, endless-rope haulage taking its place.

5. Main-and-tail haulage consists of an engine with two drums, both of which must be arranged to run free or to be connected to the engine by a clutch. On one drum is wound the *main* rope, one end being securely fixed to the drum, whilst the other end is connected to the "set" or train of tubs. The other drum takes the *tail*

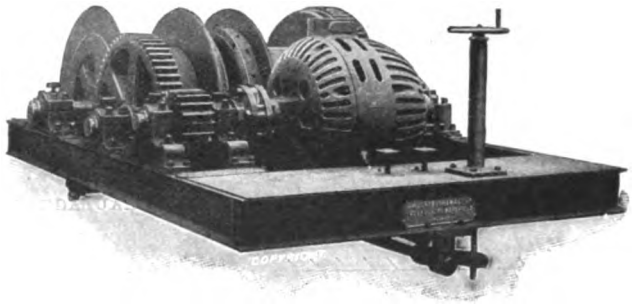

FIG. 1134.

rope, which is attached to the other end of the set after passing around a return pulley "in-bye" near to where the set lands. The length of rope required is thus three times the length of the plane. The main rope is used for hauling the "full" set "out-bye," and the tail rope for taking the "empty" one "in-bye." As the strain on the "tail" rope is not so great as on the "main" rope, the latter is sometimes a little larger than the former, whilst again in order to save trouble connected with two sizes of rope, only one size is used, the new rope being put on the "main" drum, and after partial wear is used as a tail rope.

The advantages of the main-and-tail system are that:—

(*a.*) Only a single narrow road is required.
(*b.*) Extreme variations in gradient may be worked.
(*c.*) It is convenient for taking workmen in-bye.
(*d.*) Branches may be easily worked.
(*e.*) Winding is not so dependent upon haulage.

But against these the disadvantages are:—

(*a.*) Long length of rope required.

(*b.*) High speed and great wear and tear.

(*c.*) Delivery of tubs to shaft bottom is intermittent, and

(*d.*) Engines large enough to deal with the heaviest load on the steepest gradient are required, as there is no counterbalancing of the tubs.

There are three methods of working the system, as shown in the diagrams figs. 1136, 1137 and 1138. In the first and second methods (figs. 1136 and 1137) the

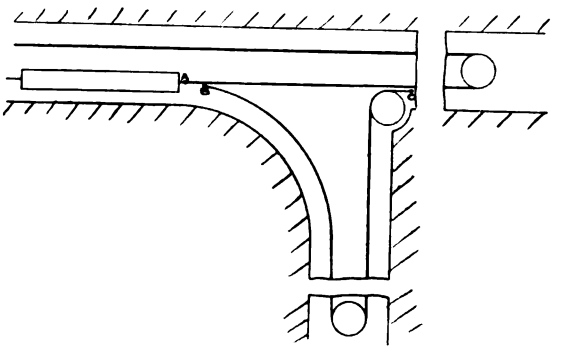

FIG. 1136.—DIAGRAM OF MAIN-AND-TAIL HAULAGE.

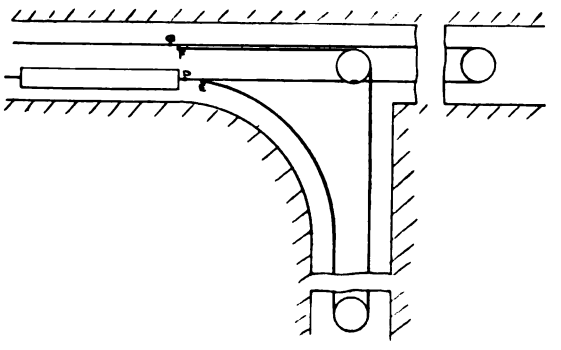

FIG. 1137.—DIAGRAM OF MAIN-AND-TAIL HAULAGE.

branch ropes are attached to the set at the branch ends, neither of which are good, and are seldom adopted. In the first, the set is shown at the branch end, attached to the tail rope A, which has hauled it from the shaft. At this point A is uncoupled and B attached; the engineman then draws up the rope end A to C, which are then coupled together, and completes the connection. In the second method (fig. 1137), on the set reaching the branch end, the rope E is coupled in the place of D, and F is coupled to G. In the third method, which is undoubtedly the best, the ropes are

changed when the set is either at the shaft (out-bye) or "in-bye," the latter being the best. As in the first and second methods, separate branch ropes are used, and couplings or "changing sockets" are arranged on the ropes, so that when the set is landed the couplings are exactly opposite the branches, where several branches are worked. Thus in fig. 1138 the couplings H J are opposite K L, and if the next set is to be run into either of the branches shown, H is connected to K and J to L, consequently the set once started runs to its destination without stopping.

In all the three methods, however, with possibly the exception of the first, as the engineman may, if careful, place the set in position to be easily coupled, since the ropes scarcely ever come exactly opposite, it is usual to provide a hand winch for

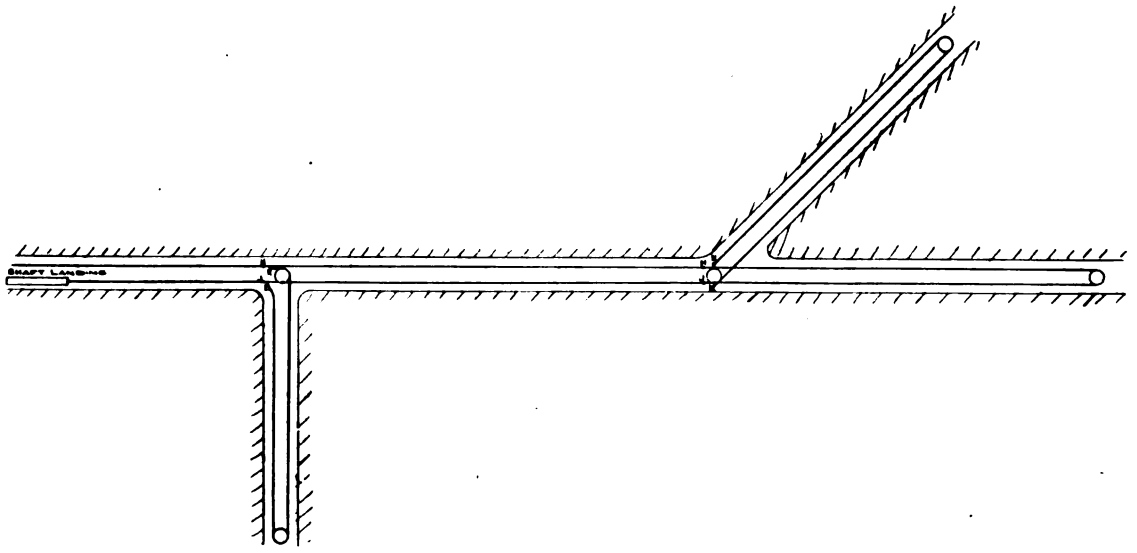

FIG. 1138.—DIAGRAM OF MAIN-AND-TAIL HAULAGE.

pulling the branch rope into position to allow the connection to be easily made. This consists of a barrel fixed to a spindle mounted in bearings between two upright posts, with a spur-wheel keyed to the same spindle, which gears into a pinion wheel, the spindle of which is provided with a square end to which is fitted a winch handle. Considering the—in many cases—very long lengths of rope, which stretch more or less, the necessity for a winch is easily seen. In the first two methods, the set is stopped on its journey, and if the rope has to be pulled up it must be done while the set is standing; whilst in the third method the winching is done and the ropes changed while the empty set is being uncoupled and the full one coupled on, or *vice versa*, at the landing.

Of the two modes of working, the third method, *i.e.*, changing the ropes when

the full set has landed at the shaft, or changing when the empty set has landed in-bye, the latter is the best, as a rather less number of tubs is required. In the former, suppose a full set has just been landed at the shaft from branch A, which was supplied with an empty set before the full set was drawn out; in branch B, a full set is ready, but before it is hauled out, an empty set must be taken in, and there must be enough tubs to allow this to be done. In the other case, suppose a set is drawn from branch A, the branch is left without tubs on the landing for a few minutes while the set is being run; but as soon as the empty set is landed, the ropes are changed to haul out branch B, and during the time the empty set is being run to branch A, and the full one hauled from branch B, the full tubs from A previously hauled out are being sent to the surface and returned empty, so as to be ready to be hauled into branch B, to take the place of the full ones, and so on.

The number of tubs in a set varies from five to seventy or more, depending upon the road, but as a rule it is best to have the set as long as possible, and the speed slow, even if this necessitates the use of stronger chains, ropes, and couplings, and a larger engine, and where this can be done, the main-and-tail system will compare favourably with any system of endless-rope haulage for efficiency in both costs and working, and will be probably the least in first cost.

A length of chain is always used between the rope and end of the set, varying from 6 ft. to 20 ft. long, but always of sufficient weight to steady the rope, so to speak, after it is disconnected from the set, and to facilitate handling. The tail-chain, which is the chain attached between the tubs and the tail-rope, is usually longer than the main chain, and is provided with a large link in the centre, and it is this link which is coupled to the set, when it leaves the shaft, the remainder of the chain being put into the first tub. The reason for this is that, should anything happen on the journey necessitating the uncoupling of the ropes, the extra length of chain is available to render the recoupling an easy matter, as otherwise the ropes would be too tight. The chain is coupled to the tub by various means, examples of which are shown in figs. 1139, 1140 and 1141; while fig. 1142 shows a split link, which is useful for temporarily coupling up a broken chain.

The main rope is carried upon rollers fixed between the rails. They should be of cast steel, as light as possible, and may be either fixed to the spindles or run loose upon a fixed spindle. The latter arrangement is probably the best, as with fixed spindles bearings have to be provided, and the spindle is to be either keyed, wedged or pressed into the roller, whereas with loose rollers the spindle is easily secured to a pair of wood carriers or supports nailed to the sleepers, and the roller may be made with long bosses so as to have a long wearing surface, and the holes are easily machined. As the barrel part wears with the rope, rollers have been introduced with loose flanges, so that, instead of having to renew the whole roller, only the

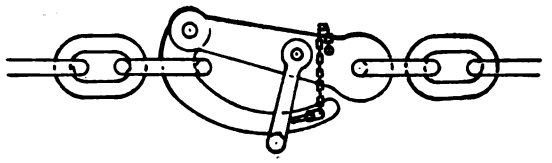

FIG. 1139.—"KNOCK-OFF" COUPLING.

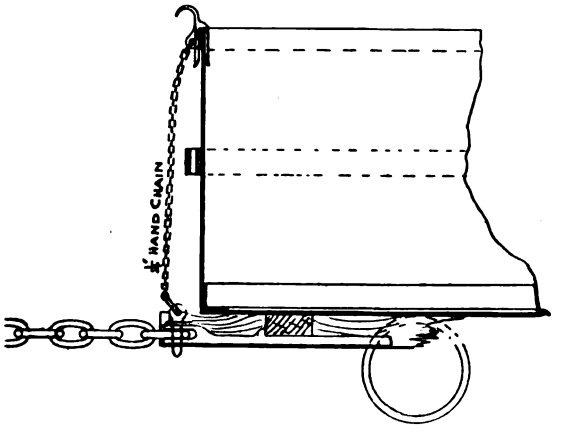

FIG. 1140.—HAND "KNOCK-OFF."

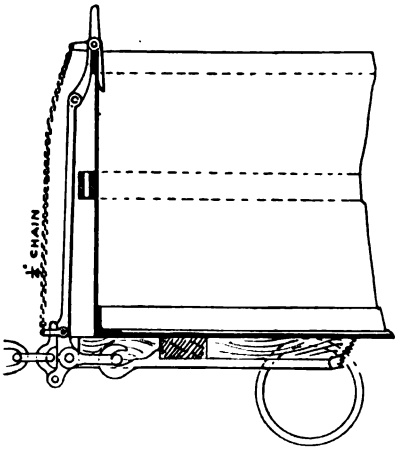

FIG. 1141.—AUTOMATIC "KNOCK-OFF."

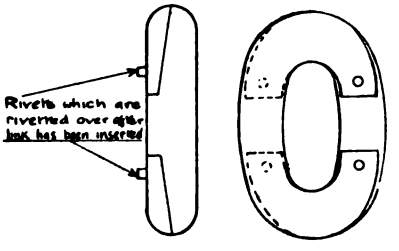

FIG. 1142.—SPLIT LINK.

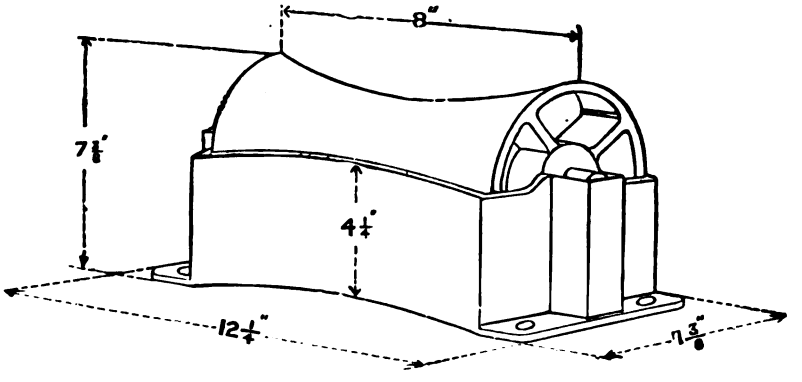

FIG. 1143.—ROPE ROLLER.

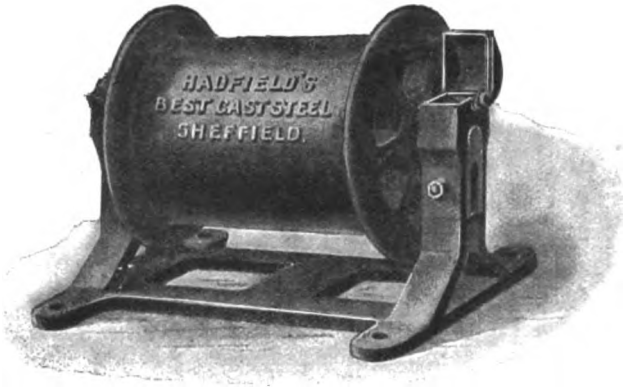

FIG. 1144.—ROPE ROLLER.

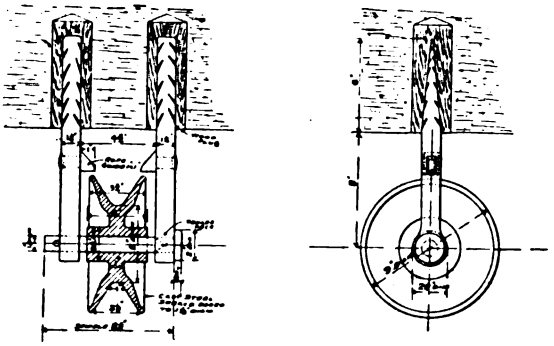

FIGS. 1145 AND 1146.—ROOF ROPE SHEAVE.

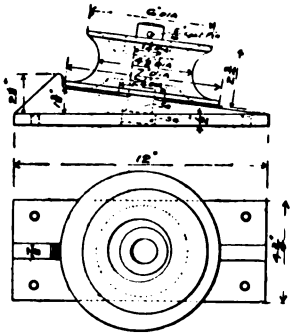

FIG. 1149.—INCLINED SHEAVE FOR CURVE.

FIG. 1147.

FIG. 1148.

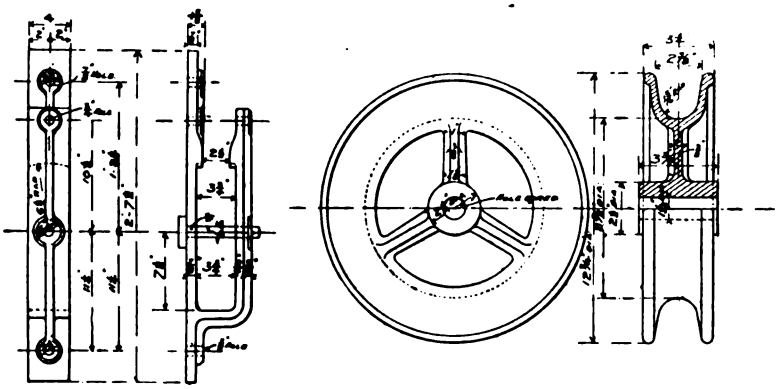

FIGS. 1147 AND 1148.—CAST IRON SHEAVE AND FRAME.

barrel part is renewed, but this is only applicable where the roller is fixed to the spindle, as the hole in the boss usually becomes as much worn as the barrel when these run loose on the spindle. Corrugated barrels have also been introduced, which have the advantage of giving strength to the barrel, and consequently they may be made a little thinner than plain barrels. They also have the advantage of providing a groove for the rope to rest in, thus increasing the wearing surface both for the roller and rope. Figs. 1143 and 1144 show rope rollers in frames by Messrs. Hadfield, the latter having oil boxes. Rollers are from 4 in. to 8 in. diameter, and spaced from 6 to 10 yards apart.

The tail rope is carried upon rollers by the side of the road or by sheaves fixed to the roof as shown in figs. 1145 and 1146, or upon sheaves carried in a cast iron

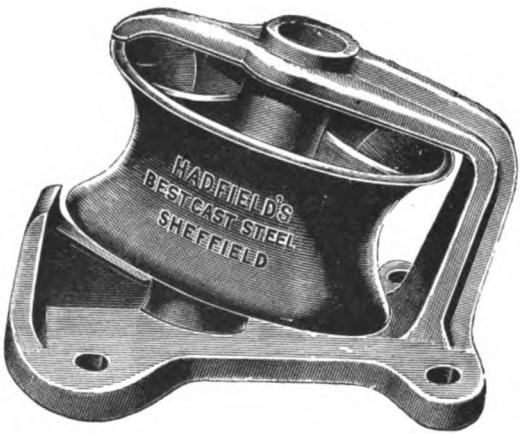

FIG. 1150.—SHEAVE FOR CURVE.

frame as shown in figs. 1147 and 1148. In the former the hangers are forgings driven into wood plugs in the roofs. Each hanger is provided with a wedge-shaped stud, which just projects over the flange of the sheave, so that it is impossible for the rope to get into the space between the sheave and hanger. The same provision is made in the cast iron bracket shown in fig. 1148, and further, after the rope is placed in position, a long bolt or coach screw passes through the arm at the open end of the bracket to prevent the rope lifting out of place.

Fig. 1149 shows an inclined sheave for curves, where the sheave is supported on a cast iron base, the bottom flange of the sheave being faced with a projection on the standard to guide the rope. The bottom flange is a little larger in diameter than the top. Another sheave of this type made by Messrs. Hadfield is shown in fig. 1150. Such sheaves are used when the curve is of large radius. There are various patterns of both sheaves and standards, the former principally differing in the dimensions of

FIG. 1151.

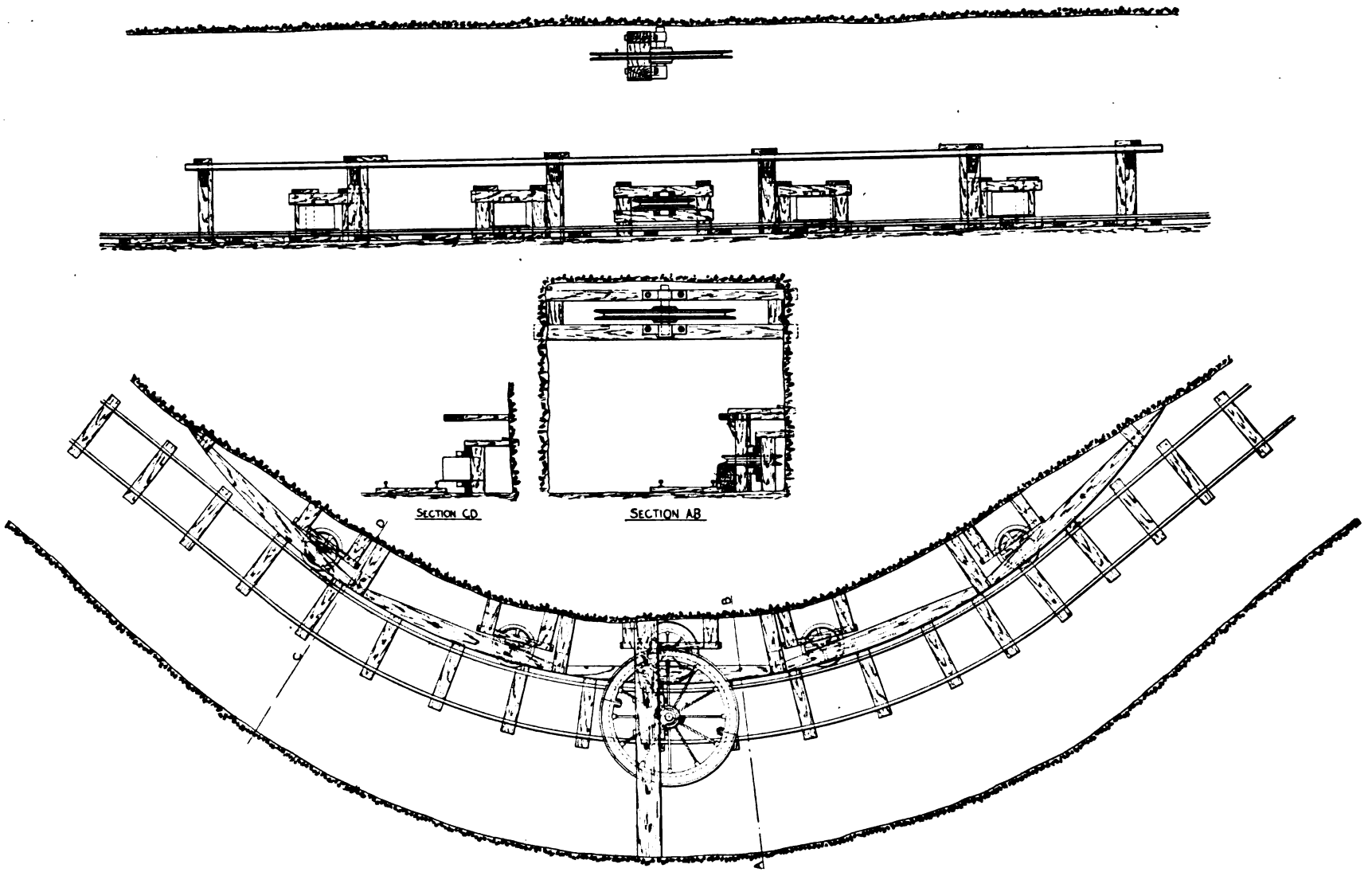

FIGS. 1152 AND 1153.

FIGS. 1151 TO 1153.—SKEATING FOR MAIN-AND-TAIL ROPE CURVE.

OF THE
UNIVERSITY
OF

Fig. 1151.

the top and bottom flange and depth of roller, while the latter may be a light wrought iron frame, a steel or iron casting, or of wood, but the great point to be considered in designing these sheaves is to allow the rope to be easily guided on, and to lift off as the set passes over them.

Where the curves are sharp it is not only, as a rule, necessary to guide the rope but also the tubs, and figs. 1151 to 1153 show an arrangement of "skeating," as it is termed, on a comparatively small radius. The skeating consists of wood runners shaped to the radius of the curve, and faced with 2 in. by $\frac{3}{8}$ in. flat bar iron, fixed upon wood supports and struts to the floor and wall side. The skeating rail is fixed at such a height as to catch the tub at about the centre of the body, the ends being trimmed back as shown. Below the skeating are fixed the drums, which are of cast steel 12 in. to 18 in. diameter, with a flange on the bottom only, and these drums revolve on stout spindles, as with a heavy set on perhaps an uphill gradient the pressure upon them is very great. At the centre of the curve is fixed a sheave about 2 ft. to 3 ft. diameter, whose tread is in line with the drums, which serves to keep the rope in place. Above, and fixed to cross beams, is placed the tail rope pulley, which is usually 5 to 6 feet in diameter.

A similar pulley is fixed at the in-bye end of the landing, either near the roof or below ground, the former being preferable, guide sheaves being fixed close up to keep the rope in place, and in order to preclude any possibility of the rope ever getting out of place, it may be boxed in with timber similar to the pulley shown in fig. 1099.

Main-and-tail hauling engines are placed either on the surface or underground, but if steam-driven the latter method is not to be recommended for obvious reasons, and if desirable to suit special circumstances, then electric driving should be adopted. In many instances where steam-driven hauling engines are placed underground, considerable economy might be effected by converting to electric drive, even where this means the expenditure of capital to instal a generating plant. When the engine is placed upon the surface it is necessary to carry the ropes down the shaft, the usual way being in wooden boxes, though sometimes cast iron pipes are preferred, the objection to these being that they wear the ropes more. The question of the size of box is one about which there seems to be a diversity of opinion, some being made as small as 4 in. square, others being as large as 9 in., and again while some are of soft wood others are of hard wood, with hard wood covers. It seems necessary with main-and-tail ropes, however, that they should be boxed in, if in the winding shaft; if in an upcast pit, where no winding is going on, then boxes are best dispensed with, taking care, however, at the pit bottom, where the rope leads on to the wheel, that there is no danger of the rope getting out of the wheel groove. The trouble with boxes lies in the fact that they wear more or less unevenly; the

rope will pass out of even a small hole worn in the casing, and there is a great danger of fouling the winding rope. On the whole, hard wood boxes of teak or oak, strongly made, with the front cover fixed by coach screws, and hinged inspection doors placed, say, every 12 ft., which may be readily opened and the condition of the boxes examined, appears to be the best method.

The wheels at the surface and pit bottom should not be less than 5 to 6 feet in diameter, be as light as possible consistent with strength, and should be perfectly true, and run in long self-oiling journals, mounted upon a strong framework of wood or steel joists. The surface pulleys should be set perfectly in line with the centre of the hauling drum, the drum being placed some little distance back to give as long and easy a lead as possible, and immediately over the pulley at the pit bottom. This latter pulley should be turned on the rim perfectly true, and should run in a box-shaped guide to prevent the rope getting out of the rim. The fitting up of this pulley especially is most important, as serious damage may be done should the rope get out of place.

There are many different arrangements of engines, the most usual being a pair of drums arranged either tandem or abreast between a pair of engines coupled at right angles. They may, of course, be either slide valve or Corliss valve engines, and instead of the drums being placed between the engines, the engines may be kept close together with a common steam chest, and the two drums kept apart. Figs. 1154 and 1155 show a tandem drum Corliss valve engine, whilst figs. 1156 and 1157 (Plate XCVIX.) show a four-drum Corliss valve engine by Messrs. Bever, Dorling and Co. In the former the drums are placed one on either side of the crank shaft, which is provided with a single pinion wheel, which gears alternately with one of the spur wheels on the drums, each drum being arranged to slide backwards and forwards upon sliding carriages, actuated through the levers and rods as shown. In the latter each set of drums abreast forms a pair, and runs loose upon the shaft carrying them. The pinion wheel of the crank shaft is always in gear with the two spur wheels, and the drums are driven by clutches, one clutch being placed between each pair of drums. Such an arrangement is bad, and it may be mentioned here that clutches on large main-and-tail hauling engines ought to be avoided. The common claw clutch is an abomination, and a little consideration of the difference in the two arms, taking the radius of the drum as one, and the radius of the claw as the other, will show that an enormous strain must come upon the clutch claws, which are merely short cantilevers, and it is little wonder that they cause endless expense, trouble and annoyance. In figs. 1154 and 1155 the drums are put into and out of gear by a spur pinion and quadrant, operated by a hand wheel, square metal blocks being dropped into the space between the carriage and box to prevent the drum moving back.

LIBRARY
OF THE
UNIVERSITY
OF
CAL...

FIG. 1154.

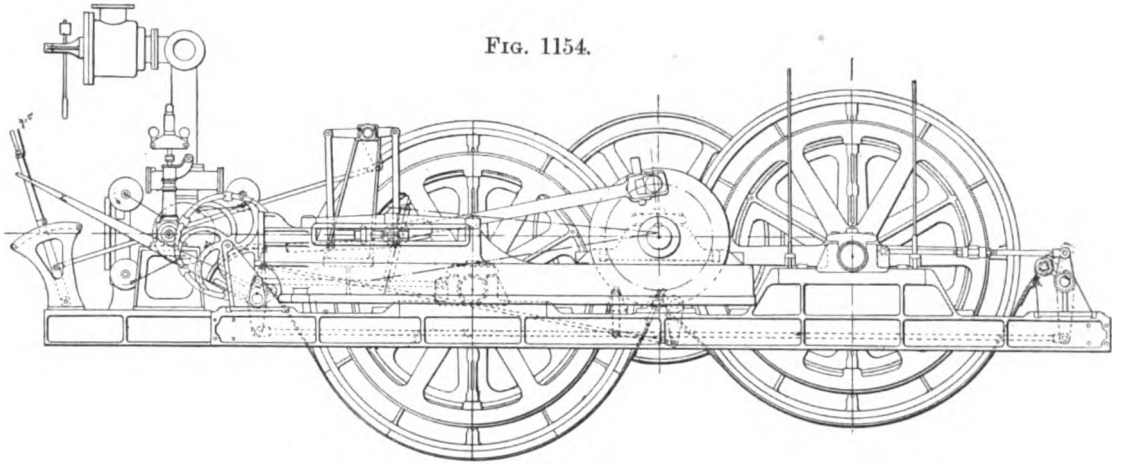

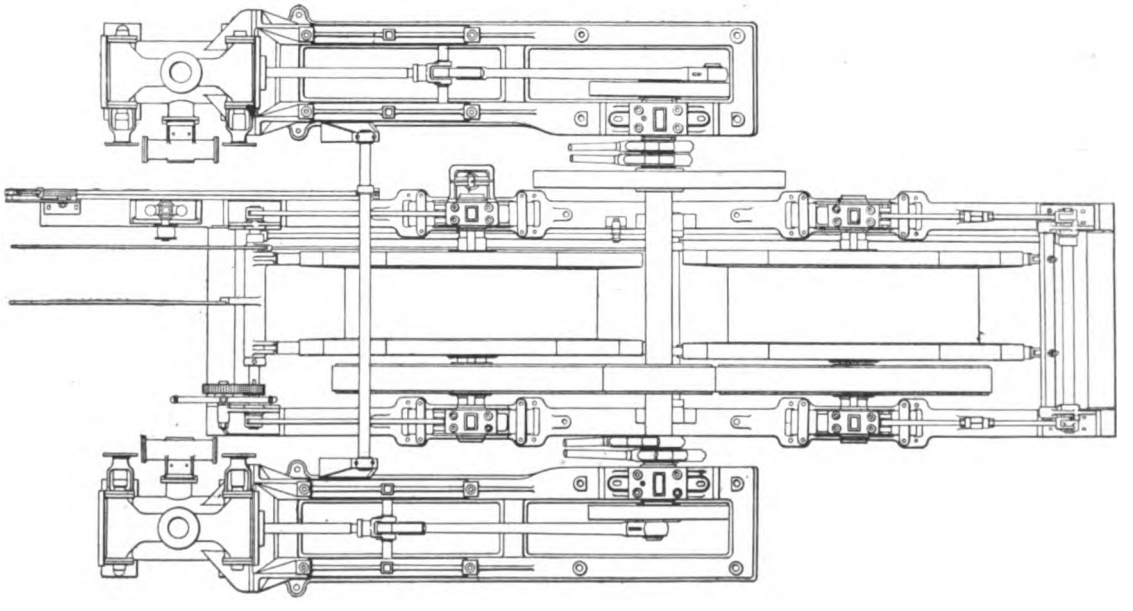

FIG. 1155.

FIGS. 1154 AND 1155.—CORLISS VALVE MAIN-AND-TAIL HAULING ENGINES.

Fig. 1158.

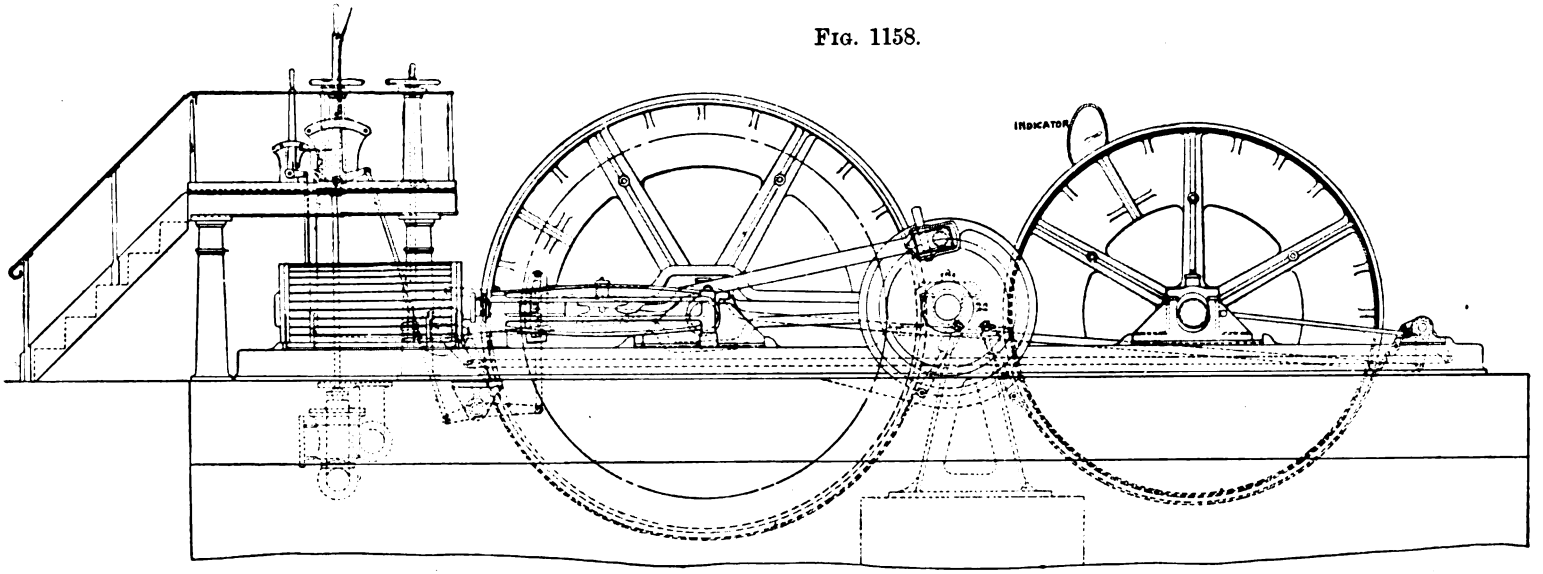

Fig. 1159.

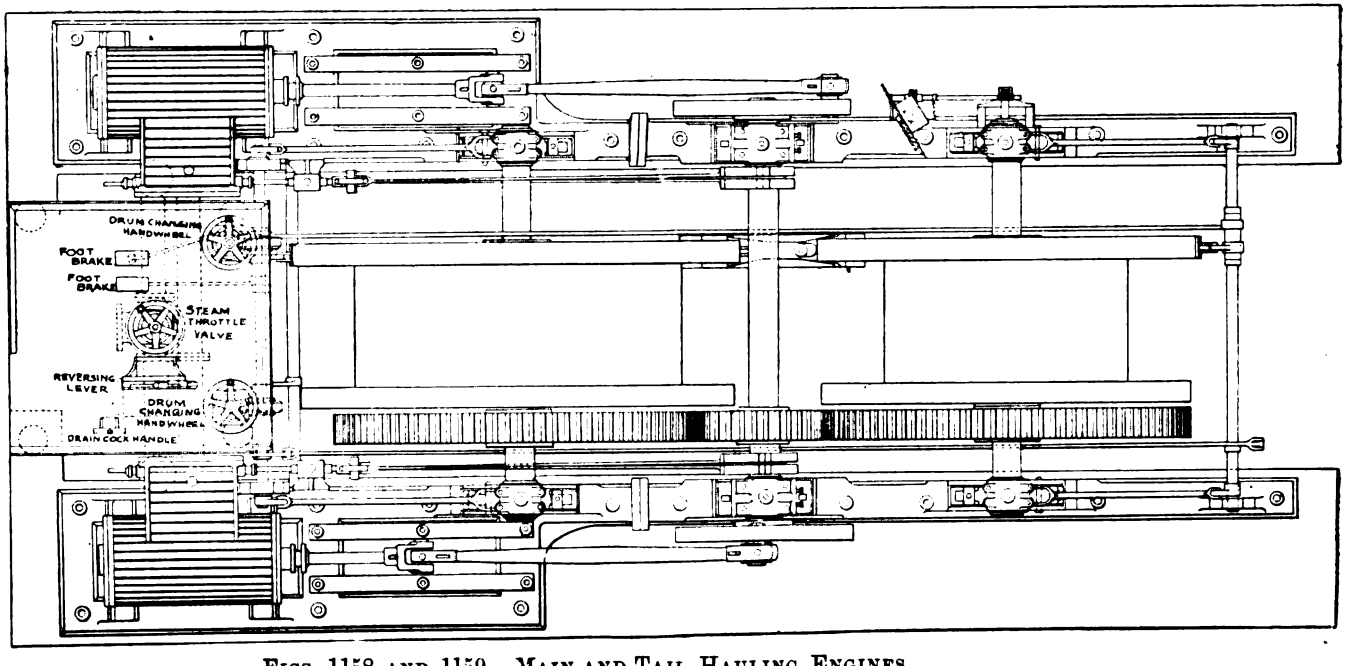

Figs. 1158 and 1159.—Main-and-Tail Hauling Engines.

A slide valve engine is shown in figs. 1158 and 1159 by Messrs. the Grange Iron Company. In this case the driver is placed on a platform so as to have well in view every part of the engine and drums. The latter are tandem and sliding, each drum being put into and out of gear by means of a hand-wheel and worm gear. It is usual for the drum to move bodily forward, though sometimes only one end of the drum moves, the other end turning on a special swivel bearing. An indicator is also provided, operated by a worm and wheel from the main crank shaft. It will be noticed that the tail drum—which is the inside one—is larger in diameter than the main drum. This is often done in order to equalise the load on the engine, and the speed of the empty set is increased without increasing the speed of the engine.

Four drums are used when only one engine is required to haul from two opposite districts, one pair of drums only being worked at a time. The engines are usually made to reverse, though reversing gear is not really necessary, as it is only very seldom used, and the engine always runs in one direction when hauling, if both ropes lead off the drums in the same way.

Indicator gear, though often provided on main-and-tail hauling engines, is not absolutely necessary, and the engineman always—whether provided with indicator gear or not—runs his set to a mark either on the drum or on the rope, as whatever district is being worked the rope unwinding from the main drum will always unwind to the same point, and in running in-bye a chalk mark on the rope or drum will always be exposed into whichever district the set has been taken, whether the distance be long or short. In coming out-bye, however, the engineman runs towards the shaft until he receives a signal which warns him that the set is approaching the landing, when he at once slows down, and brings the set gently on until he reaches the knock-off point, and a quick signal tells him to stop, when he at once stops the engine and applies more pressure to the tail-drum brake in order to draw up the moving set. The full tubs are usually landed upon an incline with a gradient towards the shaft, and where this is not a natural inclination a "battery" or "kip," as it is termed, is formed, and the tubs are brought to rest and gradually lowered afterwards by means of sprags in the wheels.

A pair of sliding drums, which are operated by means of levers only, are shown in figs. 1160 and 1161. By arranging the two arms on the weigh-bar behind the drum, with a large enough ratio it is easy enough to move large drums containing a considerable quantity of rope, without the use of gearing. As will be seen in fig. 1160, the lever connected to the carriage is set in such a position that the centre line passes through the connecting rod, centre of drum shaft and centre of weigh-bar when the drum is in gear, and hence stop blocks are unnecessary; but in order to remove the possibility of the drum moving back, the short lever should fall

FIG. 1160

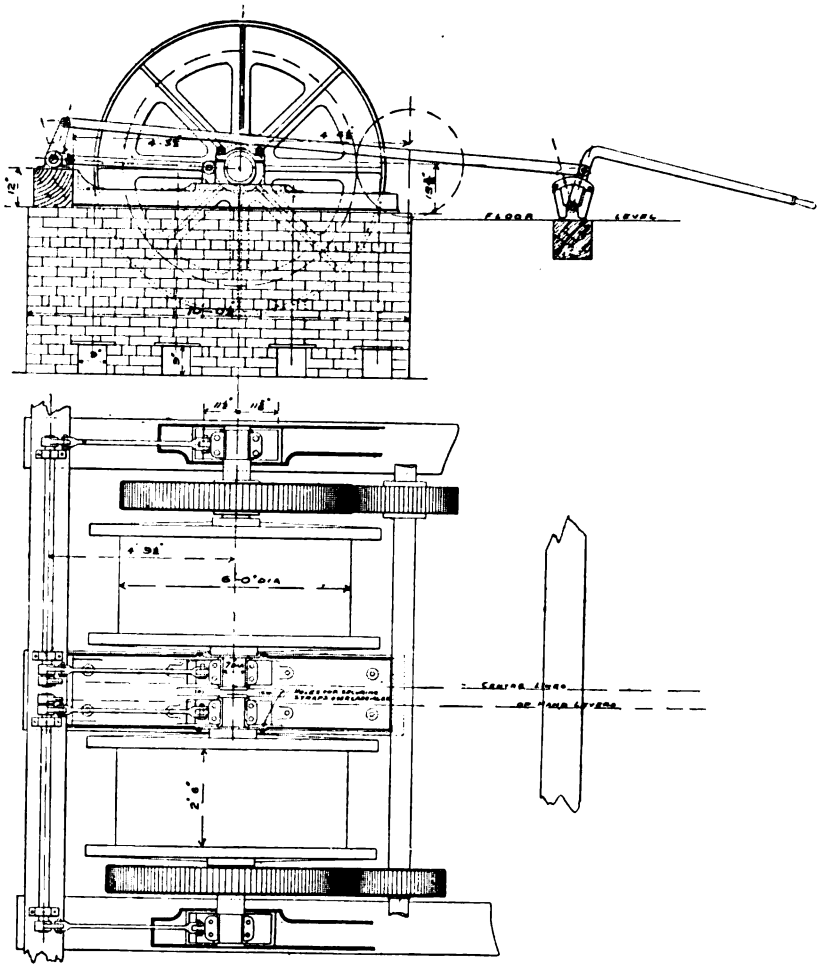

FIG. 1161.

FIGS. 1160 AND 1161.—SLIDING DRUMS MOVED BY LEVERS.

FIG. 1162.

FIG. 1163.

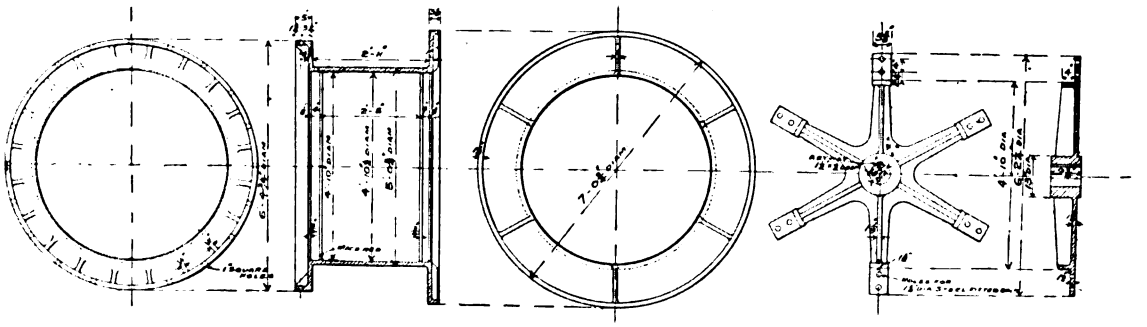

FIGS. 1162 AND 1163.—DRUM BARREL AND ARMS.

slightly below the centre line. Such an arrangement is superior in simplicity than any method of moving the drums by gearing. When the drum is out of gear, the pull on the rope is enough to prevent it moving back.

Drums are usually made with cast iron sides, in halves and bolted together, the tread or barrel being either of mild steel plate, cast iron, or wood lagging. The drum sides, however, are best made in one piece, and the barrel of mild steel plate, a flange being cast on the inside of the drum side, to which it is secured by countersunk bolts. Latterly, however, drums have been constructed with steel plate sides stiffened with T bars, secured to cast steel or cast iron bosses, which are vastly superior, being both lighter and more reliable.

An excellent design of drum is shown in figs. 1162 and 1163, where the barrel and flanges are cast in one piece and fitted to separate arms of cast steel, the barrel being machined on surfaces inside to fit the machined flange on the arms, which

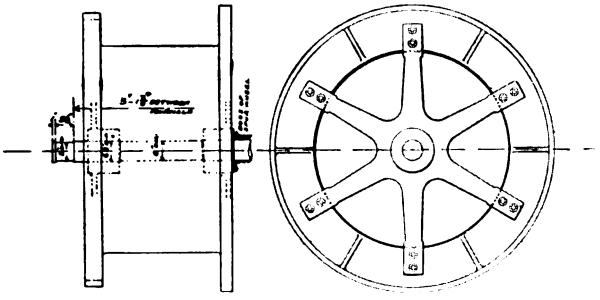

FIG. 1164.—COMPLETE DRUM.

are afterwards bolted together with turned and fitted bolts. The complete drum is shown in fig. 1164, and details of the cast iron brake cleading is shown in figs. 1165 and 1166.

With sliding drums half-brake straps on the underside of the drum are usually fitted, but in any case the strap levers must have sufficient movement to allow the brake to become slack enough to suit the movement of the drum. As a rule the brake is only in use when the drum is running loose, and during this time it is always on to steady the paying-out rope. A good engineman always keeps his outgoing rope just taut, so that on coming to a down gradient there is no fear of the set overrunning the hauling rope.

Figs. 1167 to 1169 show an underground engine raised above the floor so as to give a passage way for traffic underneath. Sometimes such an arrangement is preferable to forming an engine room on one side and leading the ropes in by means of binding sheaves. The trouble with such an arrangement lies in the

vibration practically inseparable from an engine supported on girders, but it may be reduced by making a strong ferro-concrete floor the full width of the walls, and a reasonable length both in front and behind the engine.

An excellent design of a portable electric-driven main-and-tail haulage gear is shown in figs. 1170 and 1171 (Plate C.) The drums are sliding, being operated by the levers as shown, while the motor and starting resistance are placed between the drums, the latter being conveniently situated below the frame.

In working main-and-tail haulage it is convenient to have special lengtheners at different points in the pit to couple up the ropes in case of accident.

FIG. 1165. FIG. 1166.

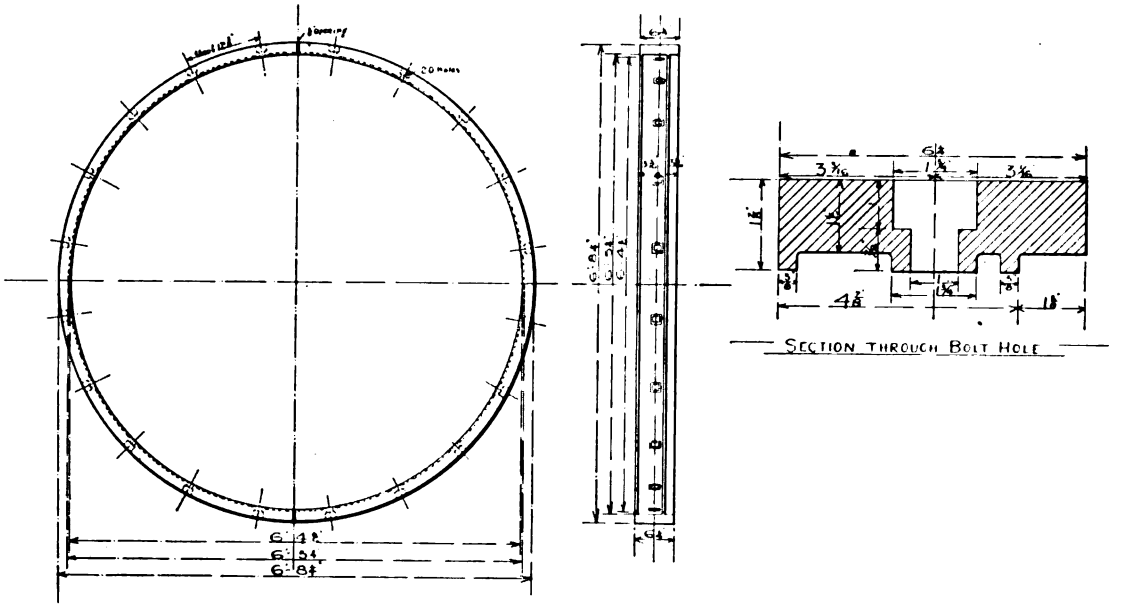

FIGS. 1165 AND 1166.—BRAKE CLEADING.

With wide drums and a number of connecting sockets which have to come upon the drum, the rope will not coil evenly, as the sockets form a bulge and disturb the even laying of the rope, and in consequence arrangements are sometimes provided for guiding the rope over the width of the drum to prevent it climbing. Such appliances, however, are unsatisfactory, and the more usual arrangement is to employ a boy who guides the rope, either by a lever or by a guide consisting of two upright spindles with rollers between which the rope runs, mounted upon a sliding bar worked by hand. The boy is also useful in giving assistance to the engineman while changing the drums, and it is probably mainly

FIG. 1167.

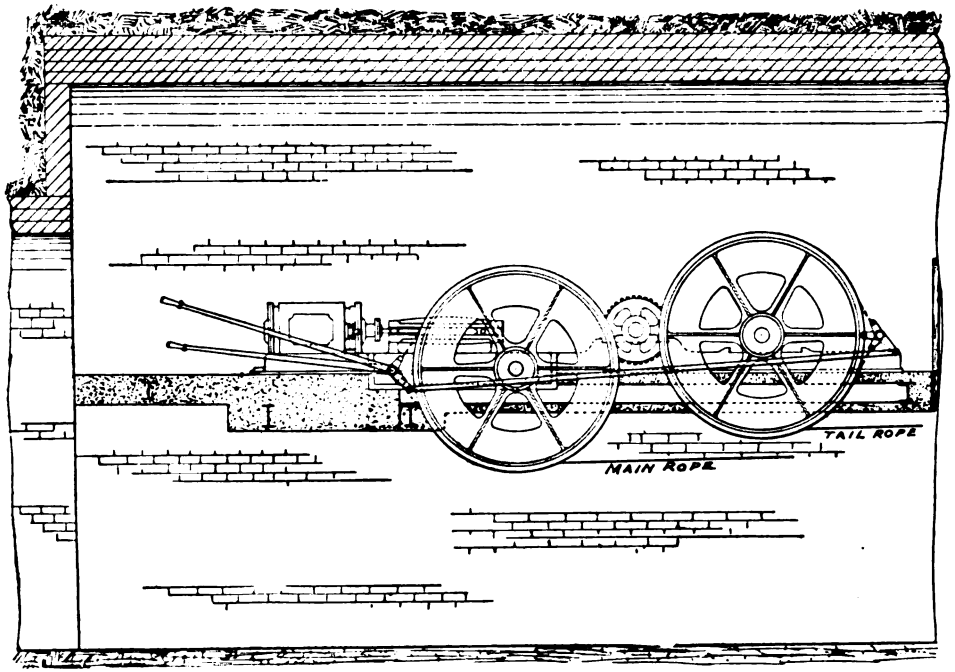

FIG. 1168.

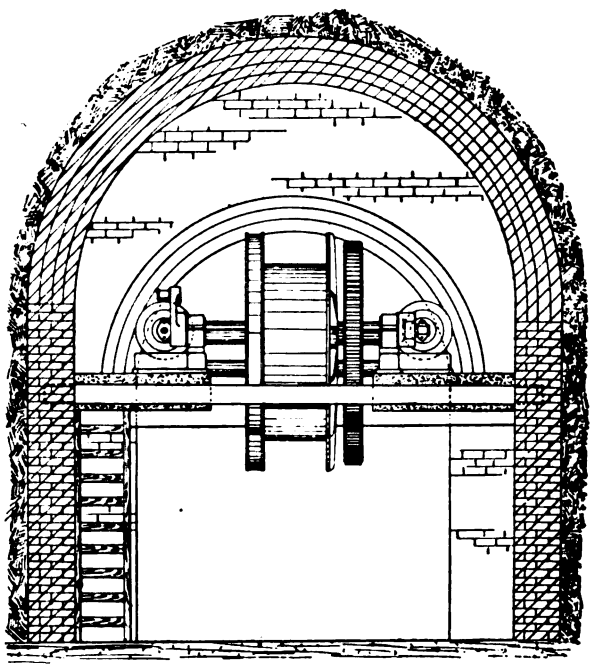

FIGS. 1167 AND 1168.—ELEVATED HAULING ENGINES.

due to the latter duty that mechanical means for guiding the rope have not been more extensively adopted.

Instead of a single engine at one end with a pair of drums, two engines may be used, one at each end, each engine hauling the set in-bye or out-bye as the case may be. Though this system saves the extra length of rope, and may somewhat reduce the wear and tear, there is the serious objection that two attendants are required with a division of responsibility.

The dimensions of a main-and-tail haulage engine may be found from the formulæ already given, taking the heaviest gradient on the journey as the starting gradient, for the reason that the engine might under special circumstances be

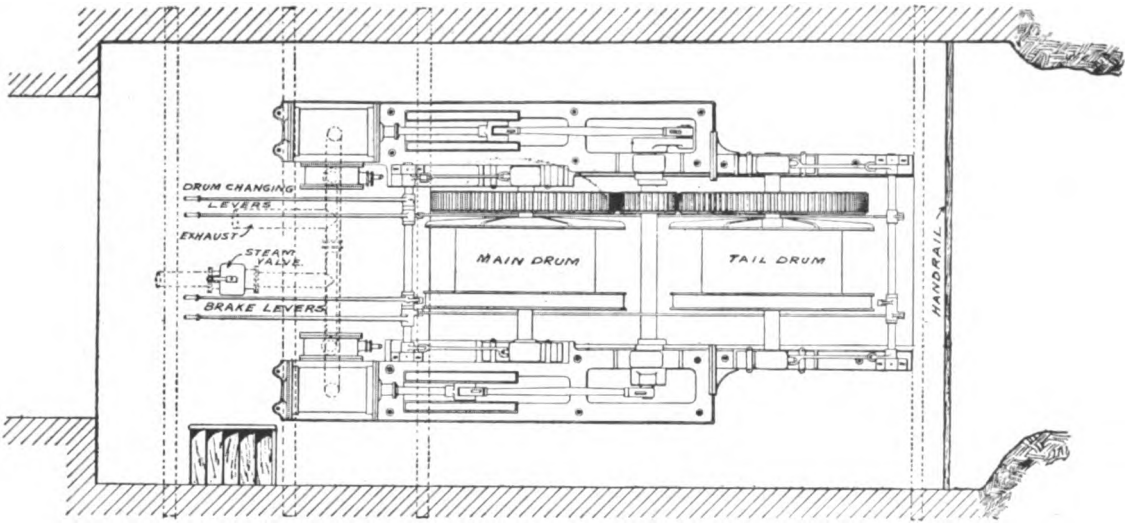

FIG. 1169.—PLAN OF ELEVATED HAULING ENGINE.

required to start the full set on that gradient. High-class engines are fitted with governors which bring an automatic cut-off into action so soon as the set gets up to full speed, much in the same way as a winding engine (*see* page 158), and, in fact, much of the formulæ given in Chapter V. may be applied to hauling engines.

Teague's patent expansion valve, which is specially suitable for a hauling engine, is shown in figs. 1172 and 1173. This is fixed in some suitable position on the steam pipe or directly over the steam chest. It consists of a cylindrical valve operated by an eccentric and rod through the rocking lever as shown. The valve spindle, however, is extended, and is connected to a right and left hand screw, the nut of which works in guides formed by the bracket, and is so arranged that it may be turned, by means of a small rack and pinion worked by the

LIBRARY
OF THE
UNIVERSITY
OF
CAL

du
m

us
be
th
wi

fo
gr

req
gov
full
mu

eng
the
ope
val
the
tha

governor lever as shown. When the engine is working very slowly the governor allows the full travel to be given to the valve, admitting full steam, but as the speed increases the governor acting on the right and left hand screws raises the valve, which reduces the steam opening. The whole of the parts comprising the nut and screws reciprocate with the valve, the nut sliding in the pinion and guides and being turned by a sliding feather.

6. The endless chain was the forerunner of the endless-rope system, and has practically been displaced by it, except for short distances where a rope would be inconvenient. Endless chain is, however, simpler and easier to deal with than a rope, as the links form not only a means of positively driving the chain, but a ready connection to the tub, and no special "clips" are required. Its weight and

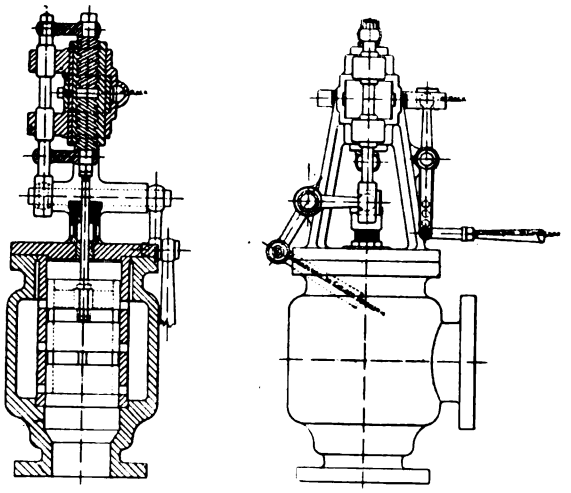

FIGS. 1172 AND 1173.—TEAGUE'S PATENT EXPANSION VALVE.

uncertainty, however, render its use on long haulage planes out of the question, though Messrs. the Weldless Chain Company have succeeded in producing a weldless steel chain which is 33 per cent. stronger than the best Admiralty chain, and has the advantage that the links are thicker at the ends where the wear takes place than at the sides; consequently a much lighter chain may be used with more satisfactory results, and in many cases such a chain ought to prove most economical. The chain is carried by the tubs, and automatically attaches and detaches itself, as the link simply drops into a square notch on the top hoop of the tub, and its weight prevents it being lifted out, though, where the tub is loaded above the top, a special clip has to be used. Curves can only be worked by a switchback arrangement, formed by making a rise at the commencement of the curve, the curve itself being laid with a down

gradient, and the tub leaving the chain runs round the curve by the action of gravity, where it is again caught by the chain.

Endless rope may be (*a*) over the tubs, (*b*) on the side, or (*c*) under the tubs, the latter being probably the most extensively used. The ideal system is undoubtedly the "over-rope," as the rope is kept well up out of the dirt, and does not drag on the floor; friction rollers are not required, and automatic attachment and detachment of the tubs is a simple matter. The principal objection to it is the difficulty in working curves, and on an undulating road in keeping the rope always on the tubs.

In any system of endless rope-haulage the rope must be kept tight, as the driving depends upon the friction between the rope and wheel, which in turn depends upon the tension, as—unlike chain haulage, where the chain cannot slip, since the links positively grip the pulley, which, in fact, may be worked very slack—tension gear is required to keep the rope tight, or it will slip. The tension, however, with the "over-rope" has the defect that it tends to keep the rope near the roof at the bottom of a down gradient, and suitable means have to be provided to prevent the rope being lifted out of the forks when the latter are open-topped.

By the adoption, however, of some form of closed clip, which has in turn the objection that it must be fastened to the tub to prevent it being lifted out, or some means of attaching the tub to the rope by a short chain, which is automatic neither in attachment nor detachment, the former gets over, to some extent, the difficulty in keeping the rope down while the latter gets over the difficulty in passing round curves, and has the further advantage that very heavy gradients may be worked by it. There is no doubt that much of the trouble with over-rope haulage is due to the amount of tension required to prevent slipping, and if proper means were taken to get enough friction without having to put so much tension on the rope, very much better results would be obtained.

(*b.*) With the rope attached to the side of the tub, the principal objection is that the pull is not in the centre, so that tubs are easily derailed, and opposite curves cannot be worked. The system is not to be recommended and may be dismissed as unpracticable.

(*c.*) With the rope under the tubs, the chief disadvantage is that in wet seams the rope, being on the ground, gets wet and dirty, and, further, all guide and return pulleys have to be below the rails, friction rollers have to be provided, and the attachment to the rope must be made by hand. Curves, however, are easily worked in either direction.

With any of the systems the tubs may be run either singly, two or three coupled together or in trains, though the ideal method is to run one, two, or three at a time, so as to have a constant supply of tubs feeding the cages. Where single

cages are in use, the tubs are attached to the rope separately, but where two or three tubs are on a deck the required number is often coupled together, and the first tub only attached to the rope. Where the tubs are worked singly or in twos or threes, a double road is necessary, though where the roof is bad and the width necessary is too great, two roads may be provided, each laid with a single line of rails. Where the tubs are run in sets, a double road may be avoided by arranging a by-pass, similar to a self-acting incline. Such an arrangement requires an attendant or "run-rider" to accompany the set, who usually travels in a bogie provided with a rope grip worked by a hand-wheel. On reaching the by-pass, one set is stopped until the other passes. If, however, two sets can be started at the same moment one going in-bye and the other coming out, with the by-pass in the centre, an attendant is not necessary. Another objection to a single road is that both the outgoing and incoming rope must be inside the rails, guide or binding sheaves are necessary at the turn-out, and two sets of rollers have to be provided. Another method of working an endless rope on a single road, with the tubs in trains, is to reverse the direction of the rope at the end of each run, which is practically equivalent to main-and-tail haulage, and at once does away with all the advantages of endless rope working.

In any system of endless rope, branches are worked separately—that is to say, a branch from the main road has its own endless rope, which may be driven from the main rope or by a separate engine. Where the branch is worked from the main rope, the latter either terminates, or is wrapped round a pulley without terminating, the pulley being keyed to a vertical shaft, to which is also fitted another friction wheel for driving the branch rope. Where the rope is under the tubs this machinery has to be below the rail level, and at these junctions the tubs going in or coming out on the main rope have to be detached and re-attached. The arrangement of the junction is not always so simple a matter as one might think, especially with the under rope, as, with the latter, rails over the rope have to be considered. With an over rope it is advisable, where possible, to arrange gradients so that the full tub will gravitate from the branch to the main rope and the empty tub from the main rope to the branch. With an under rope the cross rails have to be cut between the main rails to allow the rope to lie between, and further to ensure the wheels of the tubs crossing over, never touching the rope, the sleepers may be packed up for, say, two inches at this point, longitudinal sleepers only being used. The rope lies in the groove, but as a tub passes, the clip lifts it out.

The rope in most cases is driven by what is termed a C or "bevelled" pulley, as shown in fig. 1174, which shows a renewable tread fitted to the pulley by

Messrs. David Bridge and Co. Where the rope is reversed a pulley with a wide hollow tread is used, but where the rope only moves in one direction, the plain bevel is invariably used, the rope being wrapped about three turns around the pulley. The reason for the bevel is this—if a rope be wrapped three times around a plain shaft, and the shaft revolves, provided there be sufficient tension on the rope, the latter will turn with the shaft, and may be made to haul a load, and the effective hauling will depend upon the tension put on the rope at the going-off side. Thus, suppose a rope be coiled thrice over a plain shaft, one end of which is attached to a ton weight which is required to be dragged along, it will be found necessary to give a certain "pull" to the other end of the rope before sufficient grip is obtained to have the desired effect. Another point will be noticed, namely, that as the shaft revolves, the rope travels along the shaft or barrel, and when the end is reached the load must be taken off, and the rope put back to the other end by hand after slackening. A haulage rope coiled on a pulley acts in exactly the same way, but it is found that if the diameter of the pulley at the coming-on side be larger than that at the going-off side, instead of the rope travelling along the pulley face, it will always remain in the same place, or there is a constant slipping action going on over the face of the pulley, and as the new rope comes on it forces the rope already coiled down the hill, so to speak. Hence it is easily seen that if the on-coming rope be led on to the small diameter, the arrangement would not work, as the rope would simply travel the width of the face of the pulley, and then commence to climb upon itself at the flange, providing either the rope or pulley did not break before it got so far—with the enormous pressure caused by the strained rope coiling on an increasing diameter. It is evident, therefore, that, suppose there are three coils upon a pulley, each coil must have a less grip on the pulley than the one in front of it, and will decrease from a maximum at the going-on point to a minimum at the coming-off point, and in consequence the co-efficient of friction cannot be the same for all the coils. The point to be aimed at in the design of such a pulley, therefore, is to have such an angle that the rope will constantly slip sideways, with a minimum reduction in the co-efficient of friction, and further, as the load or tension is constantly varying, the face of the pulley should not be made straight but more or less rounded, so that the rope may move about, so to speak, until it meets an angle best suited to the load. The pulley usually consists of cast iron, with a renewable tread made in segments and bolted to the wheel with counter-sunk bolts, as shown in fig. 1174. Where great strength or reliability is required the wheel may be built

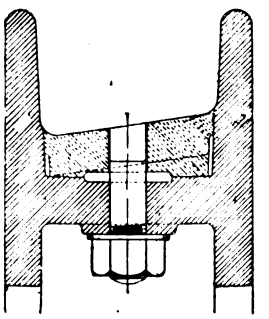

FIG. 1174.
SECTION OF C PULLEY.

of steel plates and angle bars. The pulley usually runs loose on the shaft and is coupled to it by a friction clutch.

The problem of driving the rope is, of course, similar to that of the Koepe winding pulley, which is discussed on p. 209, and the formula given on p. 213 is, of course, equally applicable to the haulage rope wheel, as instead of having a number of turns around the wheel, if the latter can be made large enough, a single half turn will suffice. The Whiting system of winding is also exactly similar to endless rope haulage, and the engine and system described on p. 210, with the Walker differential pulley, may be and is adopted for endless rope-haulage, and is certainly much to be preferred to a plain pulley for heavy haulage.

Other methods of driving the rope are by narrow V-shaped grooved pulleys, and one known as the "Thorncliffe" or "Cadzow," consists of separate flanges packed with a piece of thin wood between them to adjust the width of the groove which are bolted to a separate wheel centre, as shown in figs. 1175 to 1178. Several other clip pulleys have been introduced, some with complicated jointed rims, others with springs under the tread, which is made up of a number of small sections held between the wheel flanges, and others again with zig-zag or corrugated flanges, one of the best examples of the latter being manufactured by Messrs. Heenan and Froude, as shown in fig. 1179.

All such wheels, however, have a more or less detrimental effect on the rope, and in many cases have been abandoned. Undoubtedly, the best arrangement is a plain wood-lined pulley, large enough in diameter to drive the rope, without excessive tension, but such a wheel in most cases will be too large to be convenient; and the next best arrangement is to adopt multiple pulleys, as large in diameter as possible, on the Whiting principle.

The wheels are usually provided with a brake, and in some cases where the load is up hill, and the tendency is for the tubs to run back, on the clutch being disengaged, Messrs. Campbell, Binnie and Co. provide a ratchet pawl which engages with teeth on the wheel rim.

The tubs may be attached to the rope by short chains, one end being hooked to the tub, the other end being wrapped once or twice around the rope and hooked; or the chain may hook into a special loop of hemp which is wrapped on the rope, at the required distance apart. On steep undulating gradients two chains are used, one at each end. The chain coupling is simple and secure, but requires more or less skilled labour to attach and detach the chains quickly and efficiently. In most cases clips are used, for both the over and under systems, several examples of which are shown in figs. 1180 to 1186 by Messrs. Hadfield, and in figs. 1187, 1188 and 1189 by Messrs. the Hardy Patent Pick Company, the first being specially designed for very heavy over-rope haulage, while figs. 1181 to 1186 show simple and neat designs for under-

FIG. 1175.

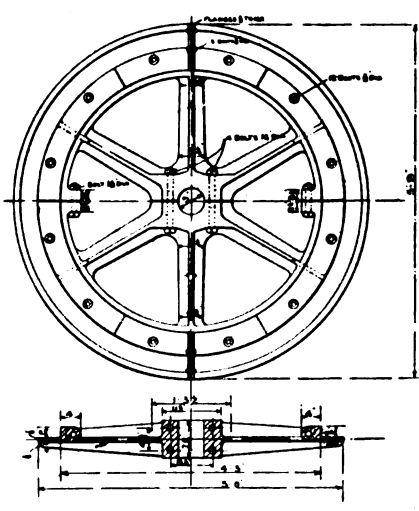

FIG. 1176.

FIG. 1177.

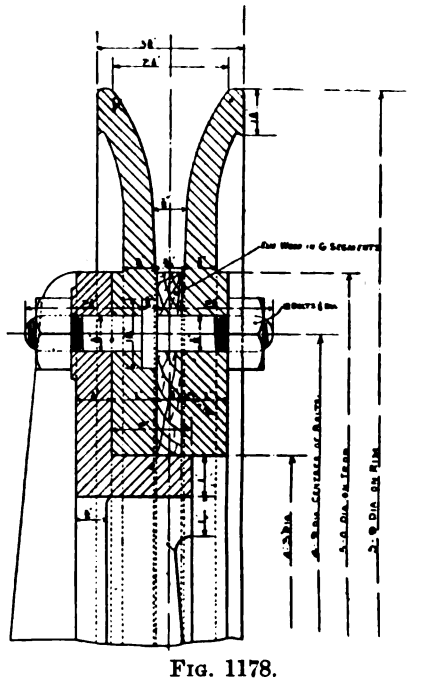

FIG. 1178.

FIG. 1175 TO 1178.—ARRANGEMENT OF "THORNCLIFFE" PULLEYS.

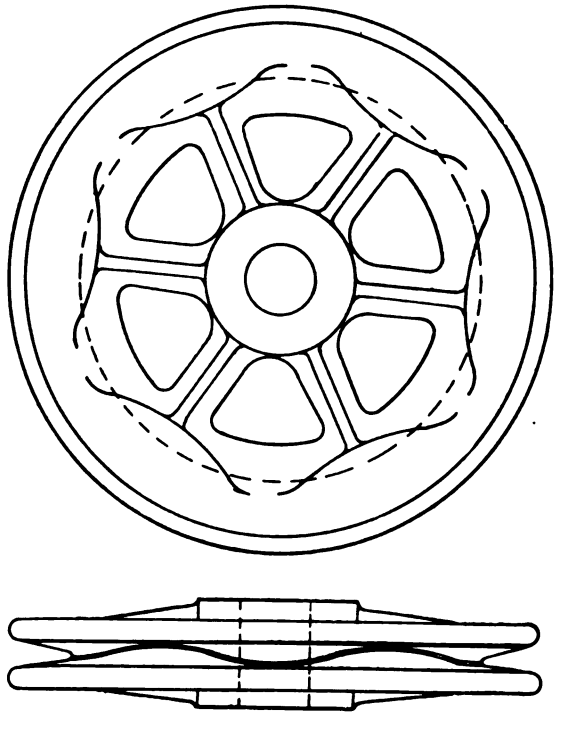

FIG. 1179.—"DEARDEN" PATENT PULLEY.

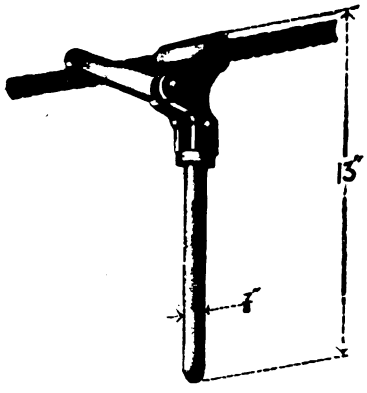

FIG. 1180.

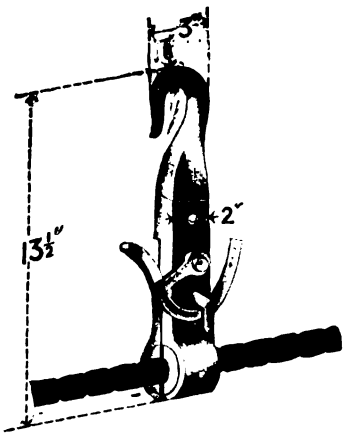

FIG. 1181.

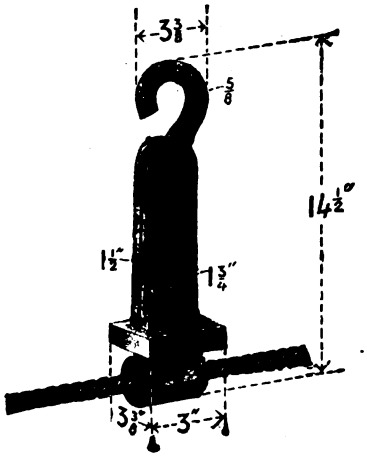

FIG. 1182.

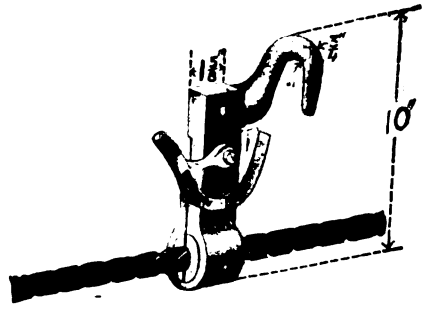

FIG. 1183.

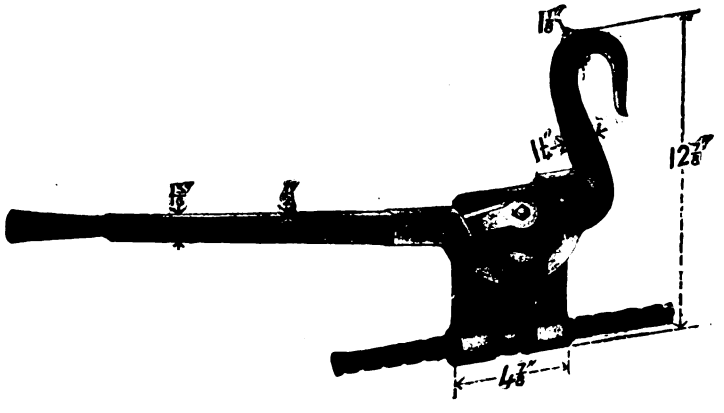

FIG. 1184.

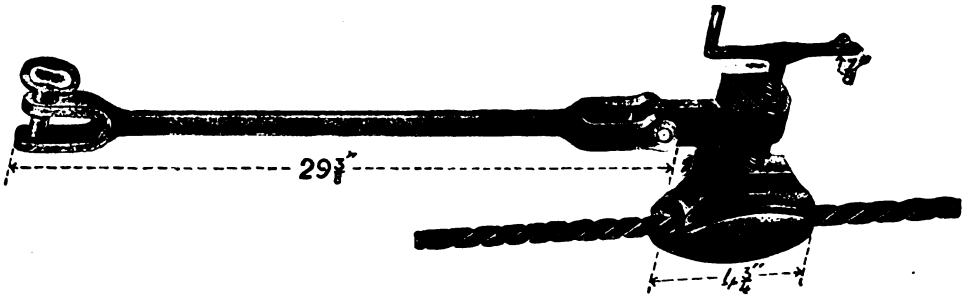

FIG. 1185.

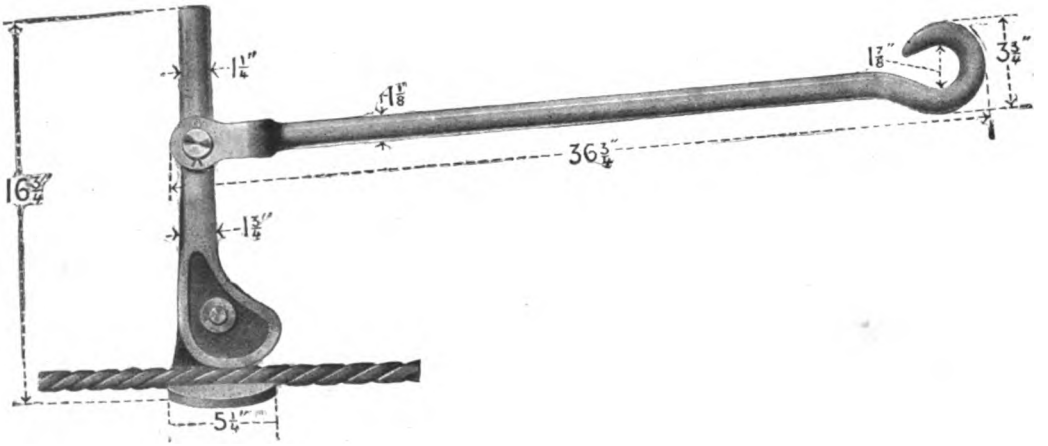

FIG. 1186.

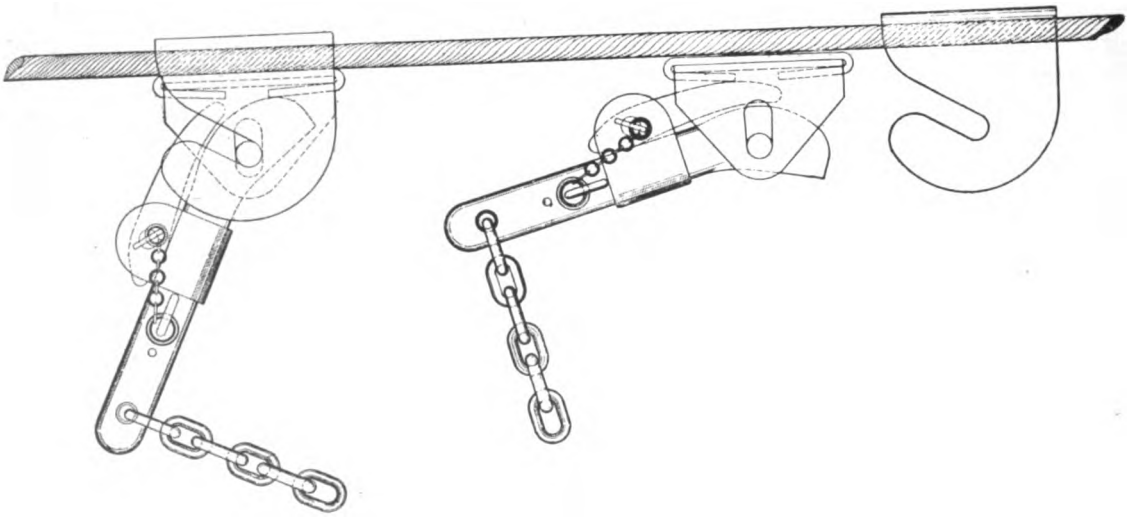

FIG. 1187.

rope haulage. In fig. 1189 the rope is released by simply raising the box clip. The choice of a clip should be made with a view of automatically disconnecting from the rope, and being easily and quickly taken off the tub. The clip should also be suitable for negotiating curves.

In working curves with the over rope, mention has already been made of the self-acting curve, but with simple suitable clips they may be passed round curves provided with pulleys. These should be as large as possible, fairly close together, and set on a frame, and without flanges or with very narrow ones. The rope is kept on a level with the horizontal pulleys, by vertical swinging gates, with a horizontal arm provided with a roller. The gate is loaded with weights on the side approached by the tub, so that as the tub pushes it aside, it raises the weight which pulls the gate back into position after the tub has passed. The curves must be provided with high angle bar check rails to prevent the tubs being derailed, and at intervals

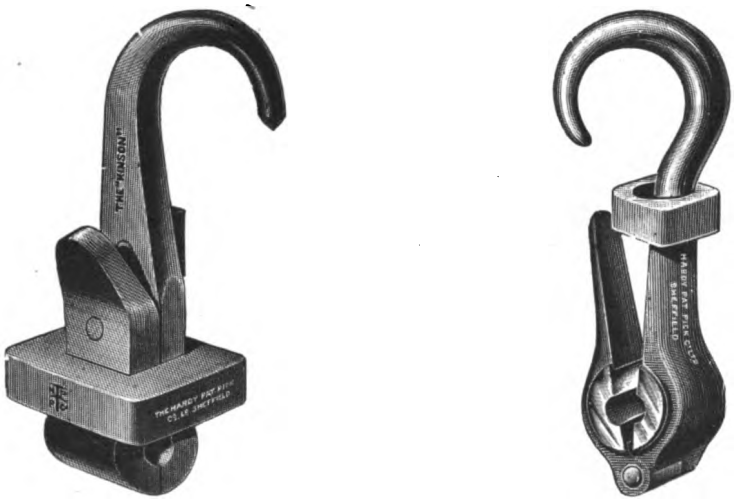

FIGS. 1188 AND 1189.

along the plane, ramps should be arranged as shown in figs. 1190 to 1192 for re-railing a tub which may have been accidentally thrown off. These are specially useful on main-and-tail haulage.

Engines may be either on the surface or underground, the latter being preferably electric-driven. Figs. 1193 and 1194 show a steam-driven endless-rope haulage engine by Messrs. Andrew Barclay, Sons and Co. Limited. The engine is a compound tandem surface-condensing one, and drives the main haulage rope wheel which is situated on the upper floor, through spur and bevel gearing. On the same floor is a tension pulley tightened by a screw, while at the other end of the haulage

plane, a return wheel, mounted on a bogie, is heavily loaded, and, placed on an incline, allows for variations in the tension on the rope. An electric-driven haulage gear with two pulleys is shown in figs. 1195, 1196 and 1197. The motor is placed on a separate foundation, and drives the gear by ropes.

The tension arrangement should always be placed as near the driving wheel as possible, the rope leading off the driving wheel going to the tension carriage wheel, which is loaded by suitable means to give the right tension to overcome the load on the rope. This is best found by experiment, and only the weight

FIG. 1190. FIG. 1192.

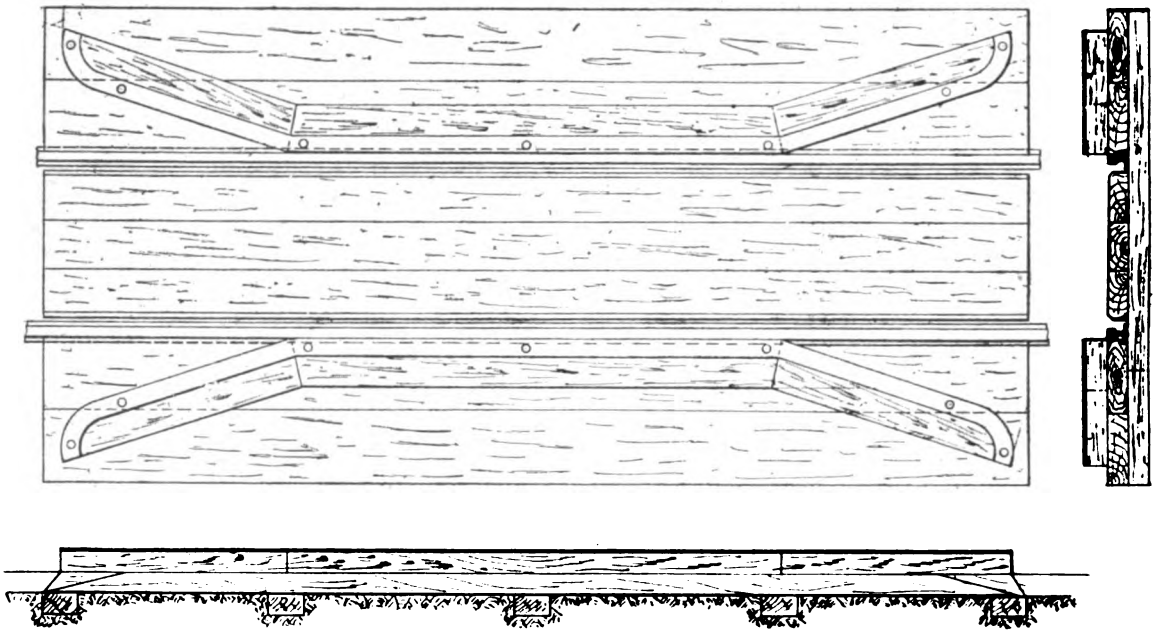

FIG. 1191.

FIGS. 1190 TO 1192.—ENGINE PLANE RAMPS.

required to give the necessary tension should be employed. Arrangements shown in figs. 1198 to 1200 and figs. 1201 to 1203 are sometimes employed where other means are not available, but any arrangement of screws is vastly inferior to a weighted carriage on an incline, or a carriage attached by a chain over a pulley to a heavy weight. Sometimes the carriage is fixed to a long screw which is tightened as required—which is not a good or satisfactory arrangement, as the adjustment is not automatic. A strong spring modifies this slightly, though the weighted carriage is undoubtedly the best.

Fig. 1193.

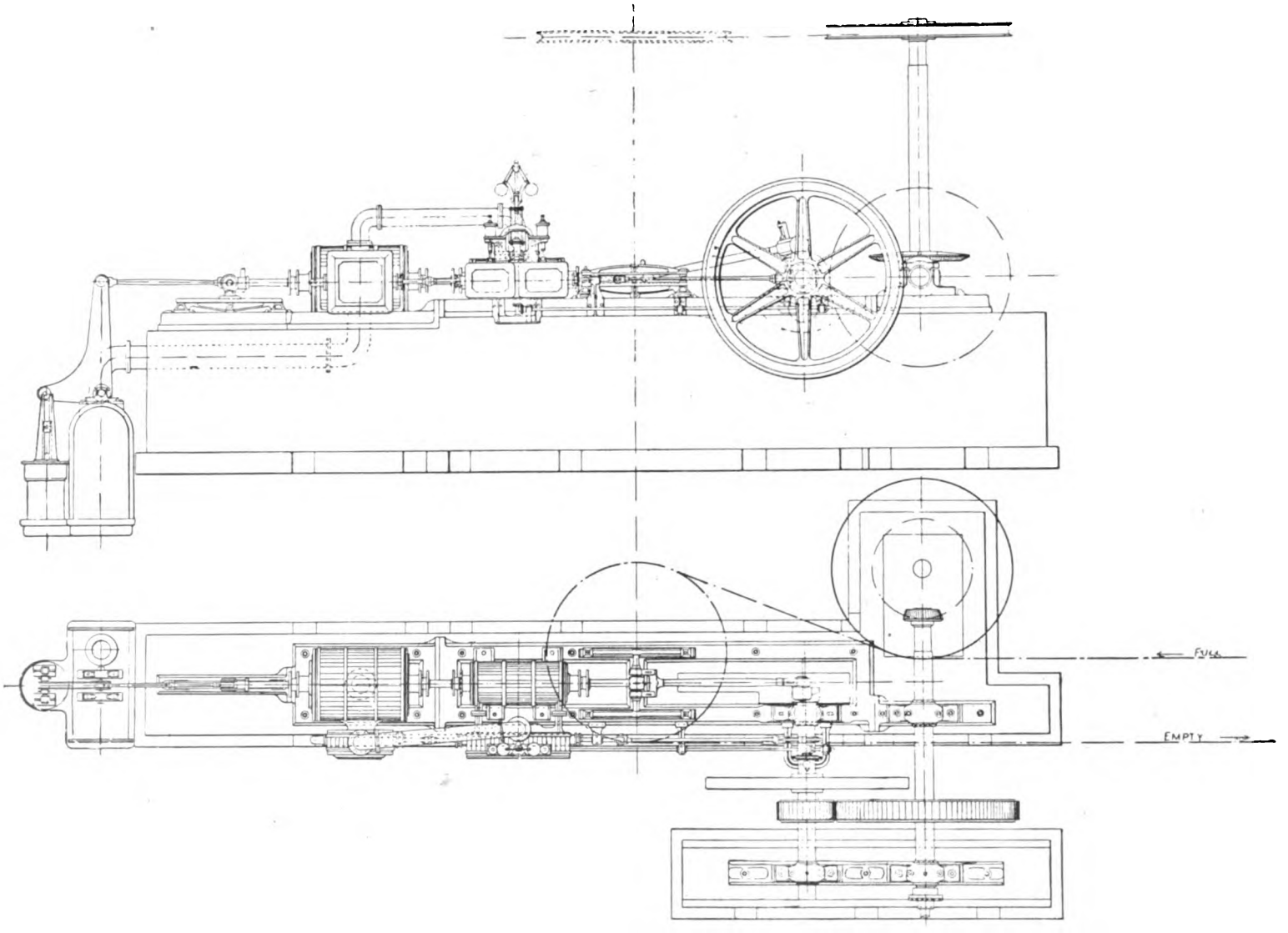

Fig. 1194.

Figs. 1193 and 1194.—Endless Rope Haulage Engine, by Messrs. Andrew Barclay, Sons and Co. Limited.

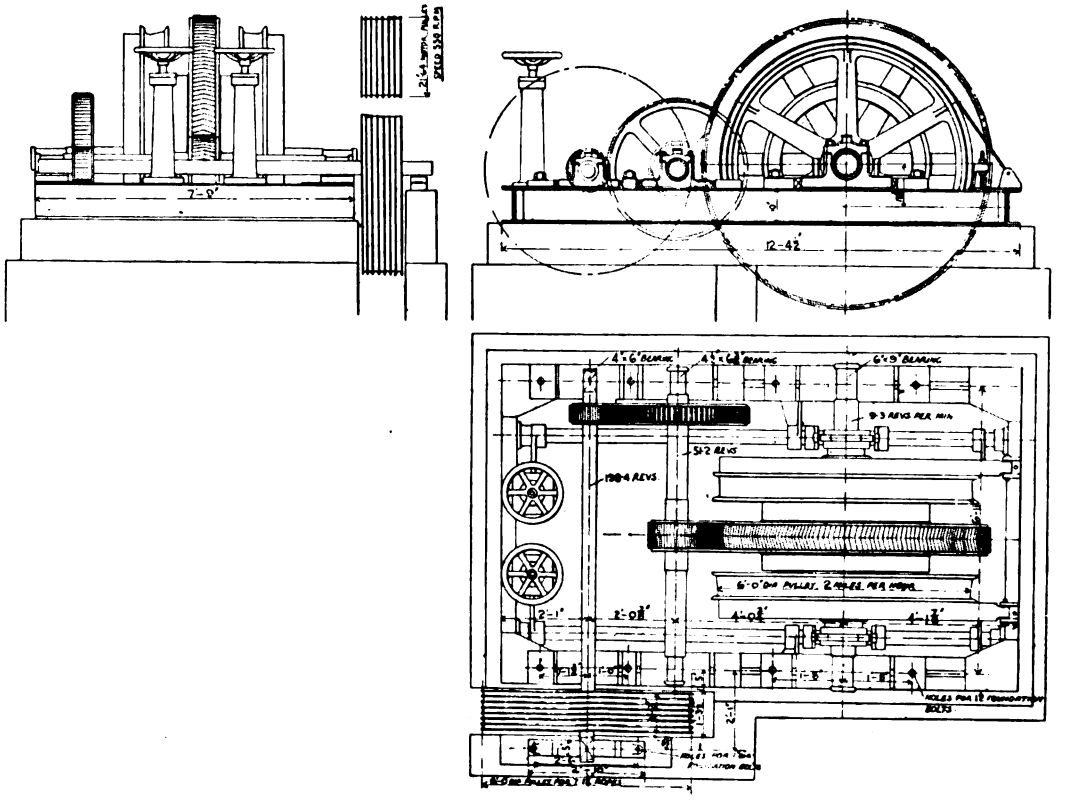

FIGS. 1195 TO 1197.—ELECTRIC-DRIVEN HAULAGE GEAR.

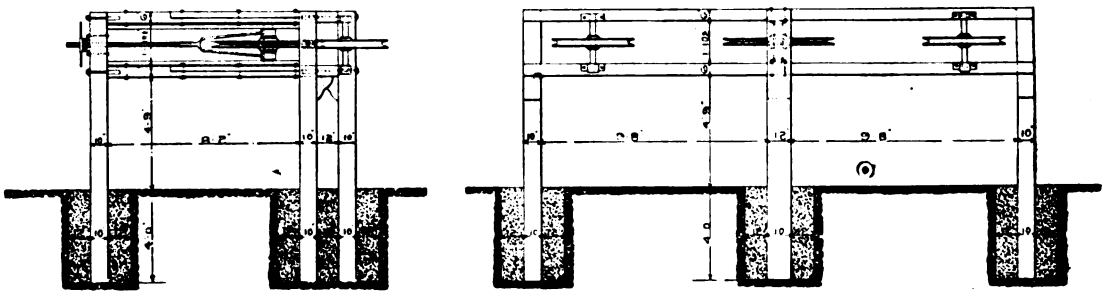

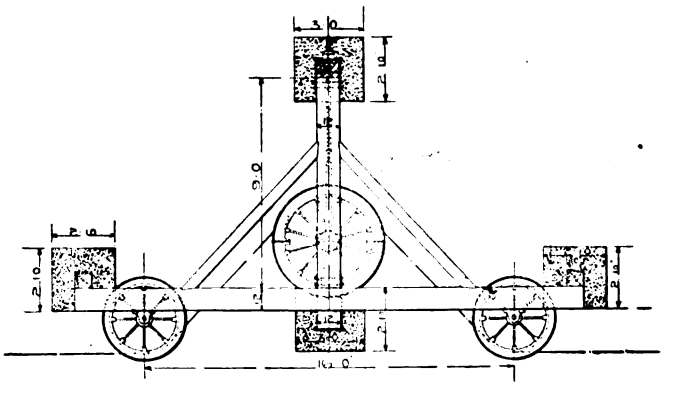

FIGS. 1198 TO 1200.—ENDLESS ROPE TENSION GEAR.

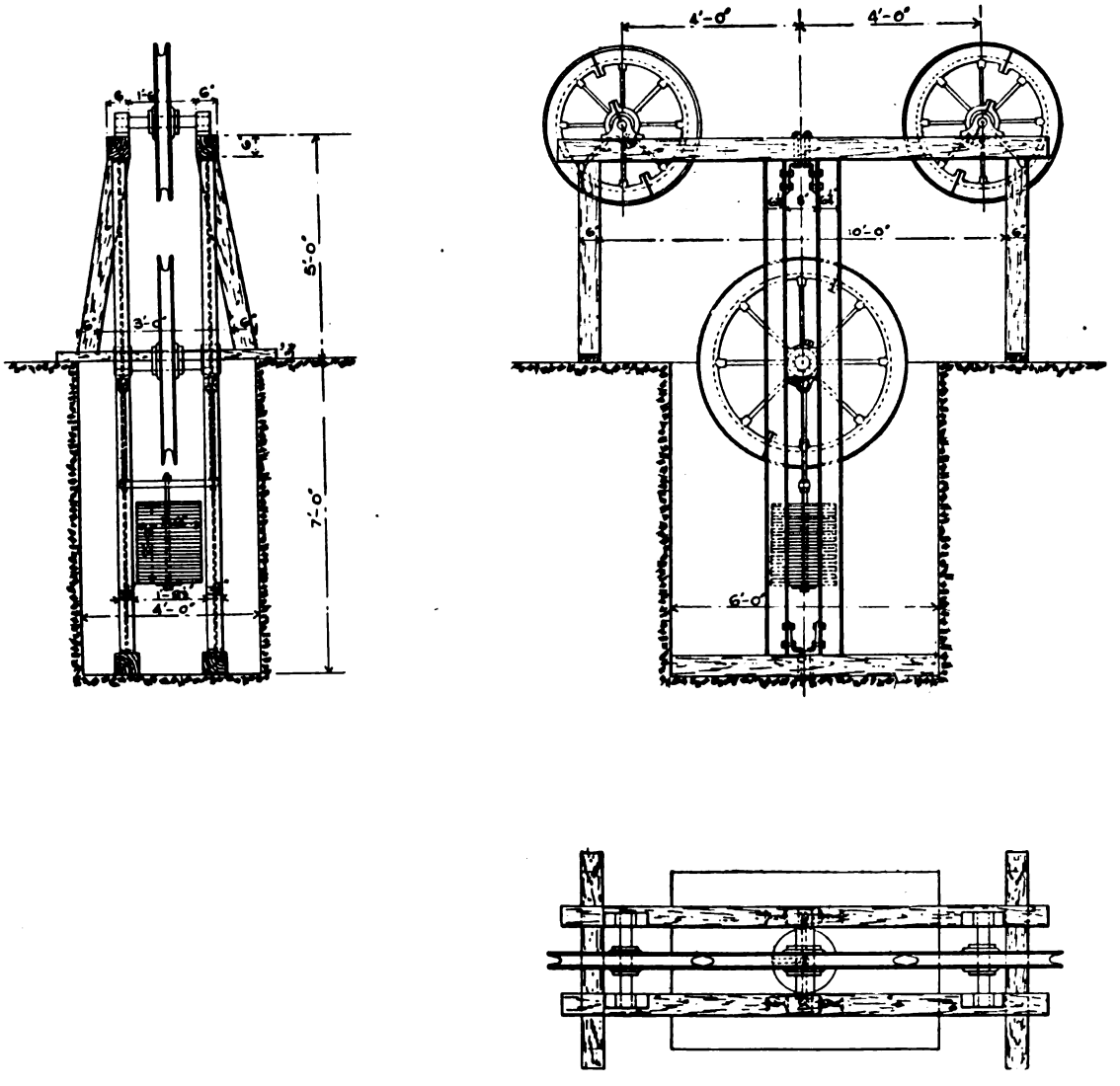

FIGS. 1201 TO 1203.—ENDLESS ROPE TENSION GEAR.

A very neat and effective arrangement of powerful haulage gear by Messrs. Andrew Barclay, Sons and Co. Limited is illustrated in figs. 1204, 1205 and 1206. The haulage is driven by a main rope from the engine, which is wrapped around the fixed pulley, the two other pulleys being operated through clutches. A special and novel feature of the arrangement lies in the use of weights to apply the clutches, and the use of compressed air to keep them out of gear. As will be seen, the weights are directly suspended from a piston rod, which is articulated to the weigh bar lever operating the clutches, which are large segments held on or off the friction ring by right- and left-hand screws. A pair of handles suspended from the girder supporting the air cylinders regulate the admission and emission of air, while a hand wheel with a screwed boss is fitted to the upper part of the piston rod for the purpose of raising the weights by hand or locking them in position after being raised by the air pressure.

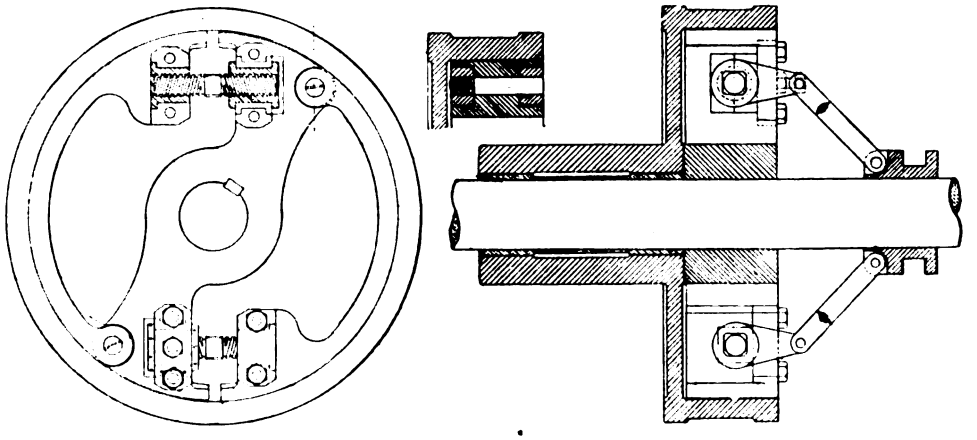

FIGS. 1209 AND 1210.—HEYWOOD AND BRIDGE'S PATENT FRICTION CLUTCH.

Frequently, however, branch haulage wheels are set in a vertical position, a good example being shown in figs. 1207 and 1208, by Messrs. David Bridge and Co. Here the vertical shaft, supported at the top in a plain bearing and at the bottom in a footstep bearing with an oil well for continuous lubrication, has fitted to it three pulleys, the upper one being the fixed driving pulley. The two lower ones run loose on the shaft, and are operated through Heywood and Bridge's patent friction clutch —a detail of which is shown in figs. 1209 and 1210—by means of the hand wheels and levers as shown. They are also provided with brake straps, and the treads of all the pulleys are renewable as shown in fig. 1174.

The starting or "throttle" valves of either main-and-tail or endless-rope haulage engines should be designed so as to be easily and gently opened or closed, in

PLATE CII.

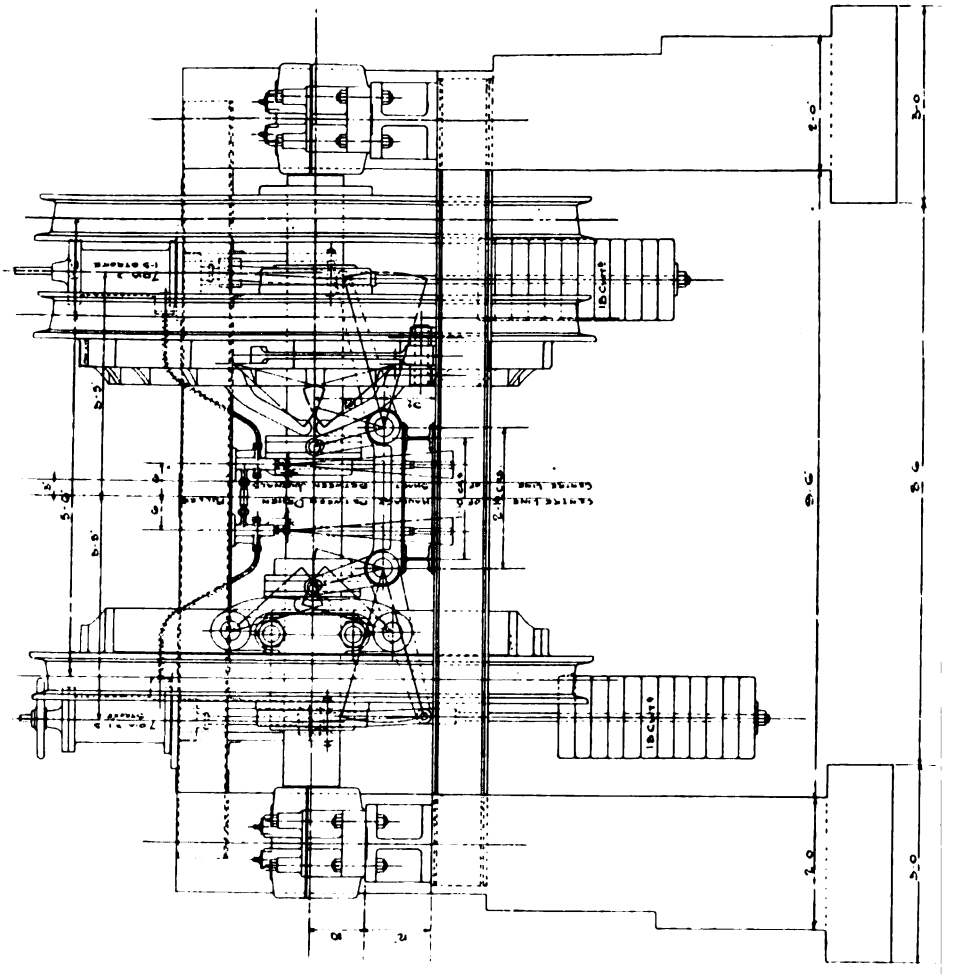

LIBRARY
OF THE
UNIVERSITY
OF

Fig. 1207.

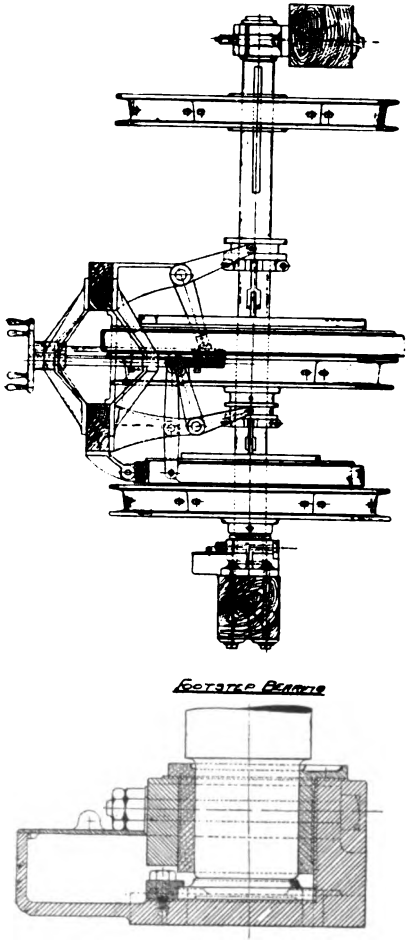

Fig. 1208.

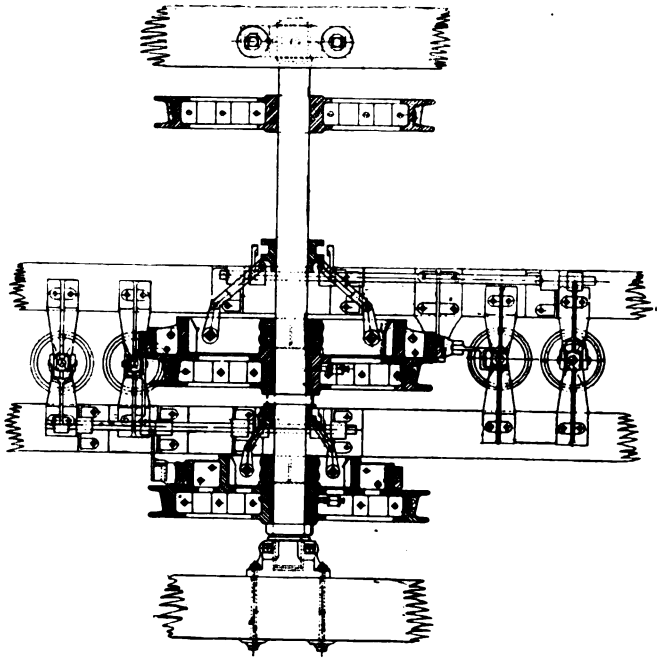

Figs. 1207 and 1208.—Vertical Endless Rope Haulage Gear.

LIBRARY
OF THE
UNIVERSITY
OF

order to enable the sets to be started slowly without jerks, an ordinary stop valve being scarcely suitable for this purpose. A slide throttle valve with an "easing" valve on the back is shown in figs. 1211, 1212 and 1213, which is an excellent type of valve for this purpose, as it will when operated by a lever—instead of the screw hand wheel, as shown—remain in any position and is easily kept steam tight. An equilibrium valve is shown in figs. 1214 and 1215 operated by a hand lever, the upper valve being slightly larger in diameter than the lower to ensure the valve closing. It has the disadvantage, however, that it must be *held* in any position of opening.

7. Locomotives are but little used in this country, and it is very questionable whether they will ever be introduced successfully. In America both electric and compressed air locomotives are extensively used, but conditions are very different, the seams being higher and the tubs very much larger. In some cases horses and ponies are altogether dispensed with, and the locomotive gathers the tubs from the face, marshals the sets and runs out to the shaft, or, in the case of a drift, brings the train out to the surface. It is questionable, however, whether their use is really so economical— even in America—as claimed.

Compressed air locomotives are an old institution in this country, but there are very few, if any, now at work. They consist of a tank or air receiver mounted upon a frame, with the engine below. The cylinders may be outside or inside, and coupled direct to the wheels, or drive the latter through gearing, which admits of the employment of a small high-speed engine. Air pipes have to be carried in-bye and the receiver is re-charged at convenient points, either from the pipes or from receivers. The objection to them is the high capital cost and low efficiency.

Electric locomotives receive the current from an overhead bare wire through a trolley fixed to the top of the locomotive. The current passes through the armature and returns through the frame of the machine and wheels to the rails, which form the return path. For efficient working, the rails must be bonded with a copper strap or bolt. In small locomotives the wheels are driven through gearing, the motor being mounted on a frame and enclosed. Some of the large locomotives in America have two motors, which gear direct with a spur wheel on the axle. Where the locomotive is required to collect the tubs from workings where it is not desirable to carry the overhead line into, a reel of cable is fixed to one end of the locomotive, which uncoils as the engine travels into the workings, and coils up again as it comes out-bye. Though there is no doubt as to the superiority of the electric over the compressed air locomotive, conditions—as to dryness of the mine, cleanliness, railroad, &c.—must be very favourable for satisfactory working.

Fig. 1216 shows a large 20-ton electric locomotive, used in America, by the Jeffrey Manufacturing Company. For such locomotives the rails must be of heavy

FIG. 1211.

FIG. 1212.

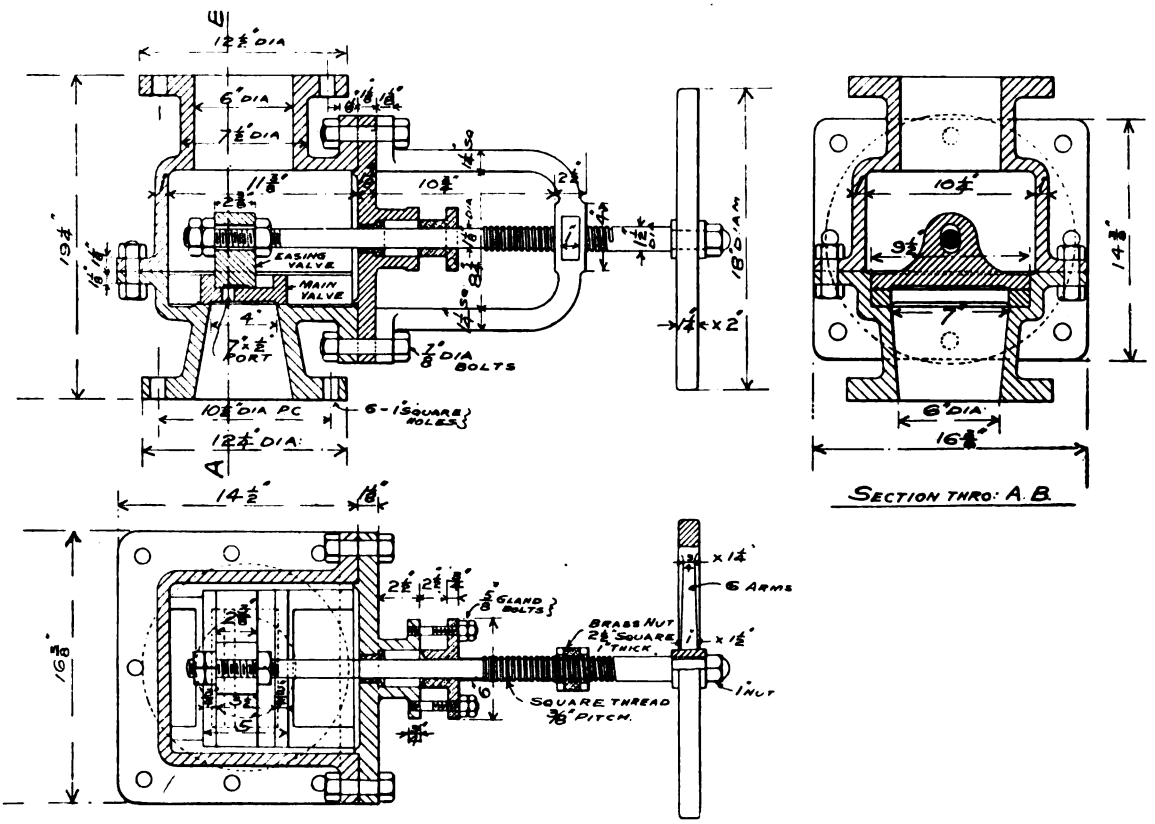

FIG. 1213.

FIGS. 1211 TO 1213.—SLIDE THROTTLE VALVE.

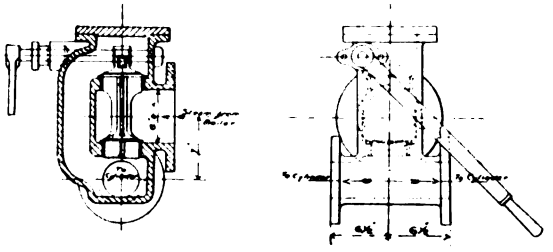

FIGS. 1214 AND 1215.
EQUILIBRIUM THROTTLE VALVE.

section and the road carefully laid. Such a locomotive has a rated draw-bar pull of 8,000 lb. at a speed of 6 miles per hour, and requires an input at this rating of 120 kilowatts. At starting, the draw-bar pull is 12,000 lb. It is 13 ft. 8 in. long, 4 ft. 7½ in. wide, 3 ft. 2 in. above rails, which latter are 60 lb. per yard, the minimum gauge being 30 in.

The ideal system would be a storage battery locomotive, but the weight and expensive upkeep render their use in this country practically an impossibility. Figs. 1217 and 1218 show a 2-ton and a 6-ton storage battery locomotive respectively by the same firm.

Hot water locomotives, which consist of a tank filled with water, raised to a high temperature by blowing in high-pressure steam, and benzine gas locomotives,

FIG. 1219.

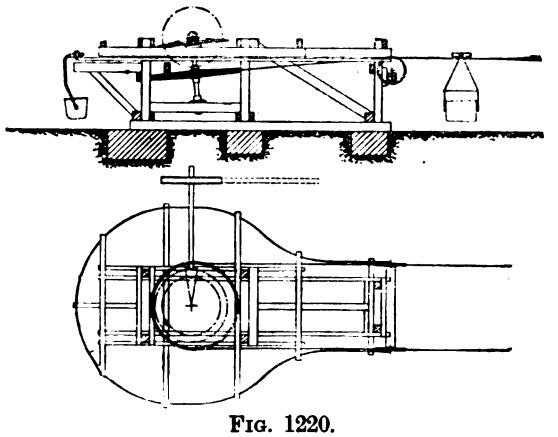

FIG. 1220.

FIGS. 1219 AND 1220.—OVERHEAD ROPEWAY DRIVING STATION. (*See* page 565).

have been tried in Germany, but do not appear—especially the former—to have met with any marked success.

8. Overhead ropeways form a convenient means of transporting material between any two points and over any kind of ground, and are now commonly constructed to carry any quantity of material up to 120 tons an hour, and in exceptional cases even up to 200 tons per hour. They are extensively used on collieries for conveying coal either to sidings, washeries or coke ovens, forming *débris* heaps, &c., though for the latter purpose a special design of ropeway is usually adopted.

Aerial ropeways are, broadly speaking, divided into two classes—(*a*) the single rope type, where one endless rope performs the double function of supporting

and conveying the load, and (*b*) the double rope type, where a light endless rope hauls the loads over a second fixed and heavier rope, which acts only as a rail for supporting the loads.

FIG. 1221. FIG. 1222.

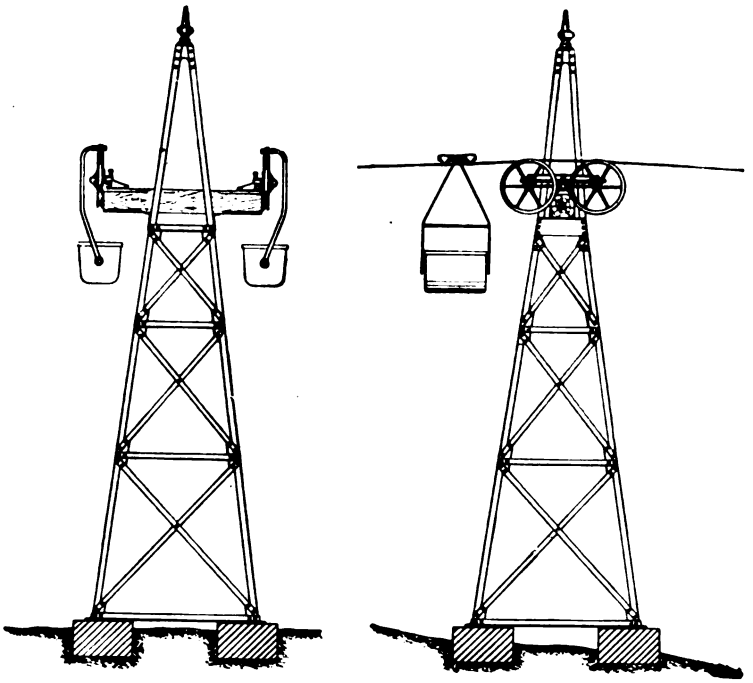

FIGS. 1221 AND 1222.—OVERHEAD ROPEWAY STEEL TRESTLE.

FIG. 1223.

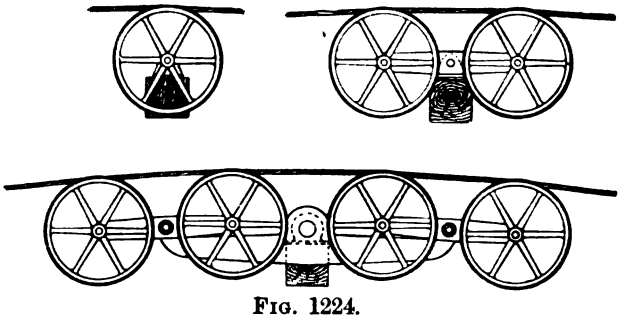

FIG. 1224.

FIGS. 1223 AND 1224.—TRESTLE SHEAVES.

Messrs. Ropeways Limited—who have supplied the following illustrations—having confined themselves entirely to the former of these types, and have developed it to its present high degree of efficiency, being the original patentees not only of

Fig. 1225.

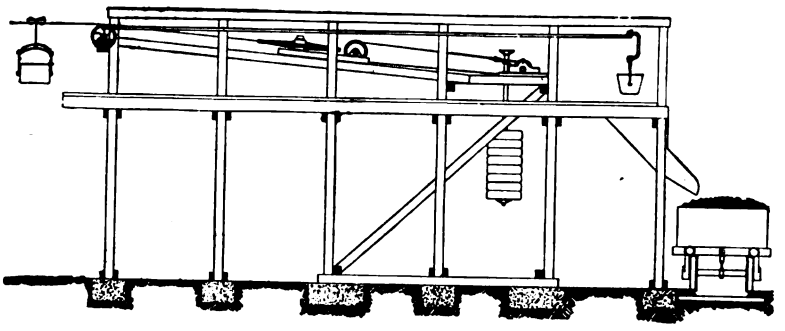

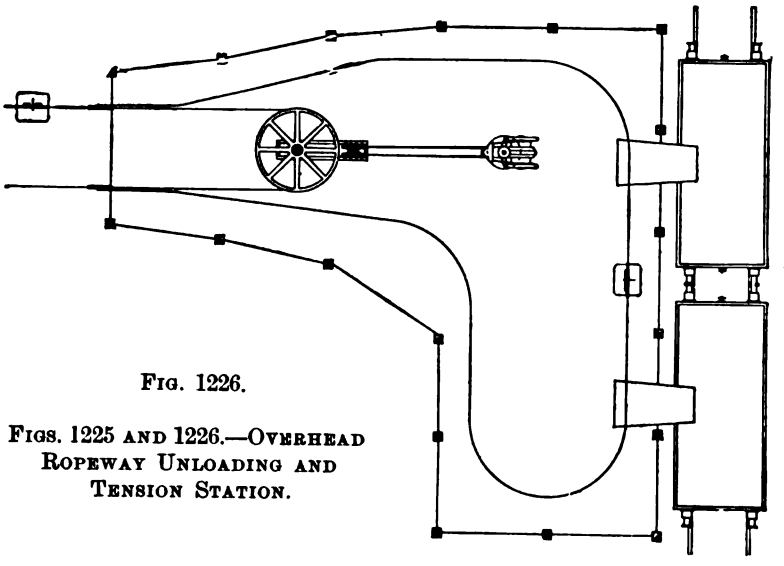

Fig. 1226.

Figs. 1225 and 1226.—Overhead Ropeway Unloading and Tension Station.

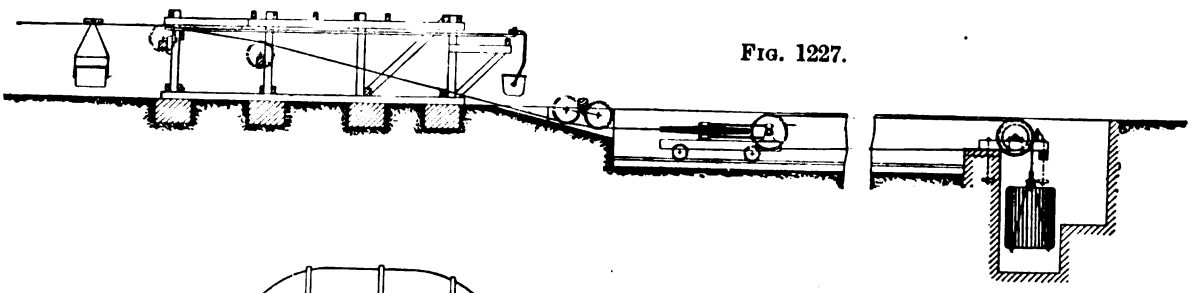

Fig. 1227.

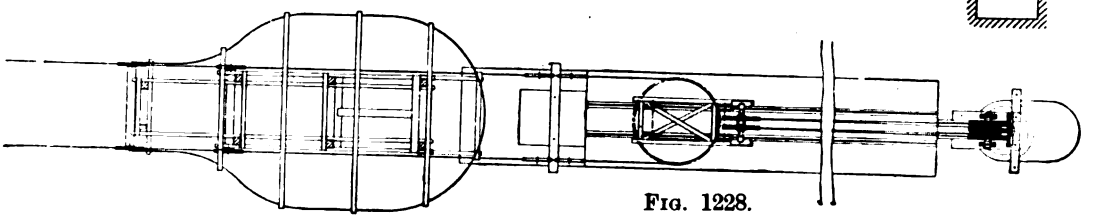

Fig. 1228.

Figs. 1227 and 1228.—Unloading Station and Tension Gear.

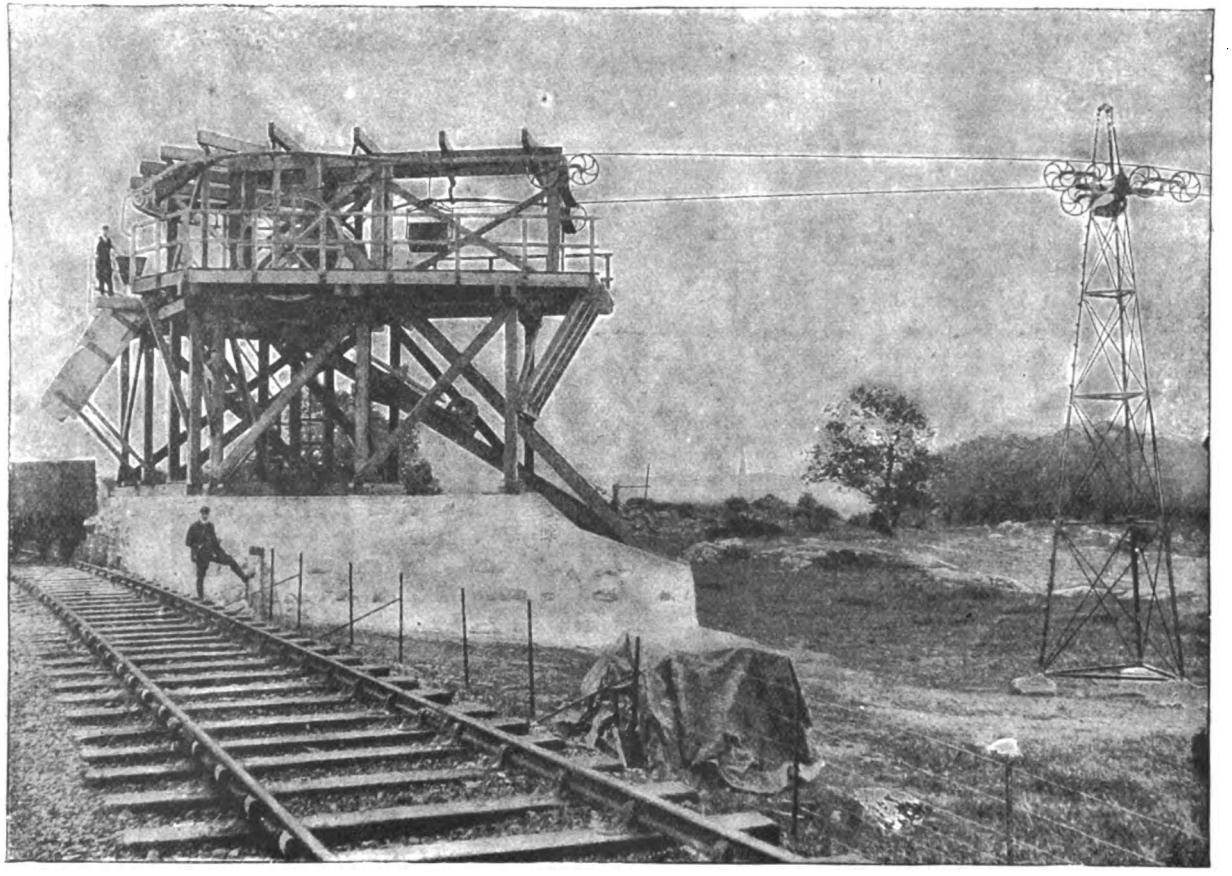

FIG. 1229.—DISCHARGING STATION.

the balance sheaves now universally used on ropeways of this type, but also of many other improvements now generally in use.

As will be seen from figs. 1219 and 1220, which show plan and elevation of a driving station, the rope passes round a horizontal pulley, which is driven either above or below by spur or bevel gearing, and is then led over the guide pulleys exactly in line with the landing or shunt rails at the front end of the station.

These shunt rails consist of an iron rail mounted upon a suitable frame, on to which the carriers are automatically delivered off the rope, and upon which they run by means of wheels provided for this purpose, the empty carriers being delivered on one side and the full ones despatched at the other.

The rope is supported at intervals by trestles as shown in figs. 1221 and 1222, which are provided with special pulleys or in groups of two or four—figs. 1223 and 1224—fitted in balance beams which automatically adjust themselves to any varying

FIG. 1230.

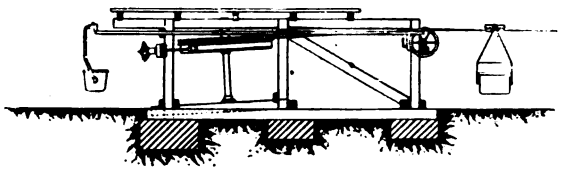

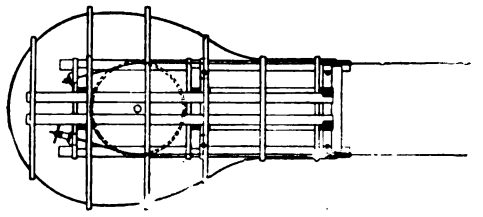

FIG. 1231.

FIGS. 1230 AND 1231.—ROPEWAY BRAKE WHEEL.

rope angle caused by a load approaching or leaving the trestle, thus distributing the weight of the load and pressure of the rope equally, and at all times over all the sheaves at these points.

At the discharging end a similar erection to that at the driving end receives the carriers, which are run round the rail to be discharged and re-delivered empty on to the outgoing side of the rope (*see* figs. 1225 and 1226). The rope is here passed around a pulley mounted on a trolley, free to travel up and down a slide or race or is fitted to a travelling bogie similar to ordinary endless rope work as shown in figs. 1227 and 1228. A constant tension is kept on to the ropes at this end by a floating counterweight attached through multiple gear to the trolley as shown.

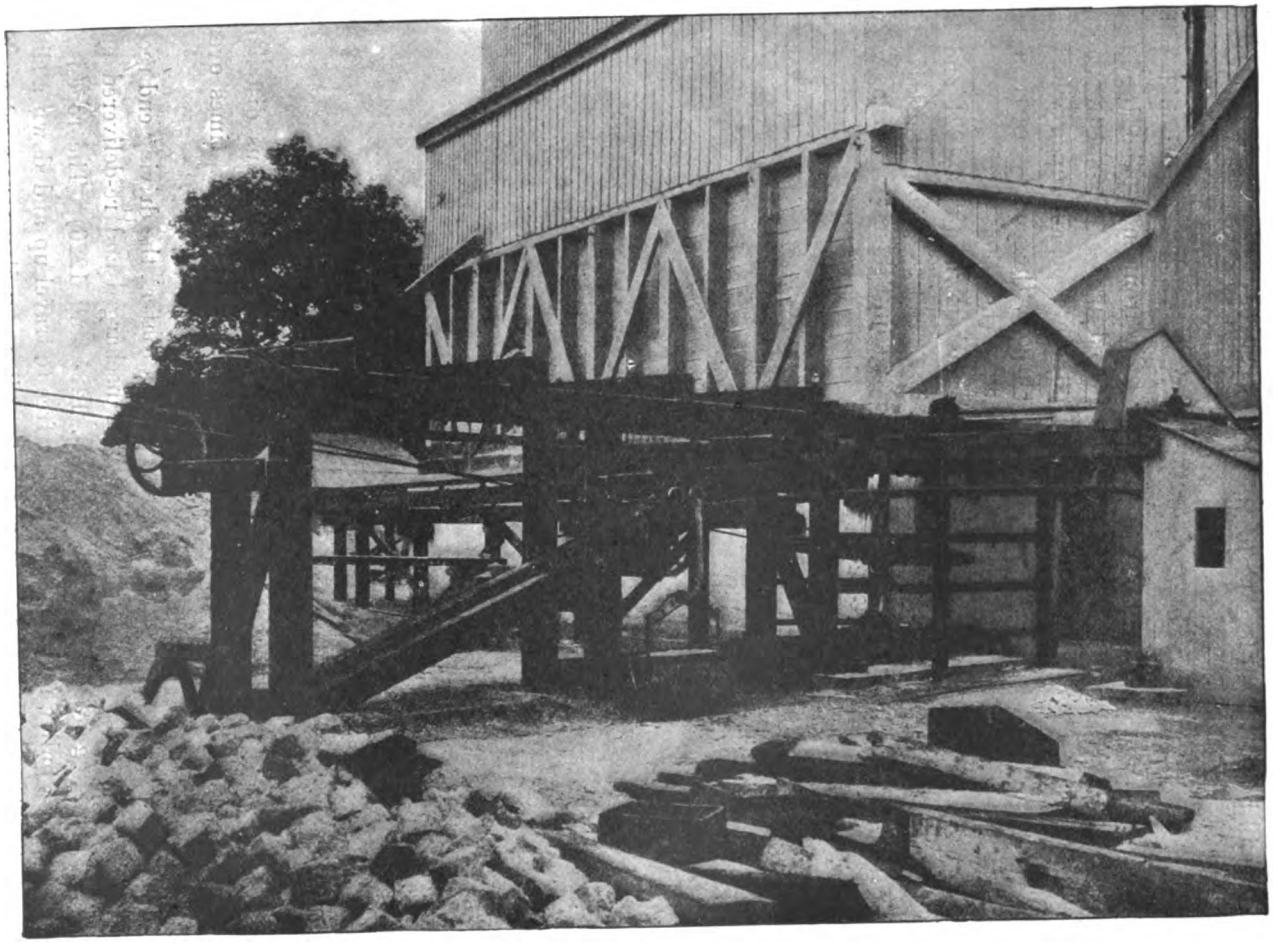

FIG. 1232.—ROPEWAY DRIVING AND LOADING STATION.

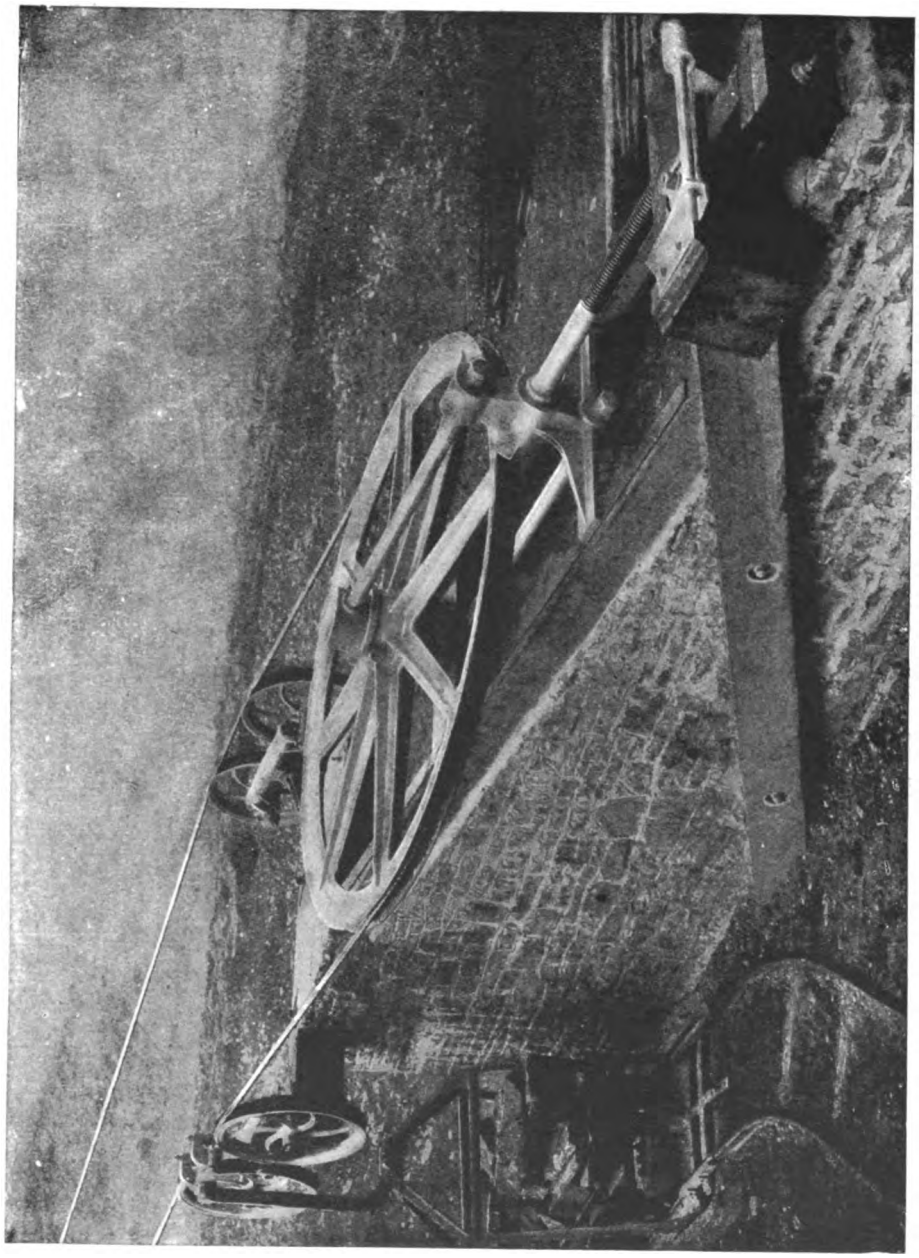

FIG. 1233.—ROPEWAY UNLOADING STATION.

LIBRARY OF THE UNIVERSITY OF CALIFORNIA

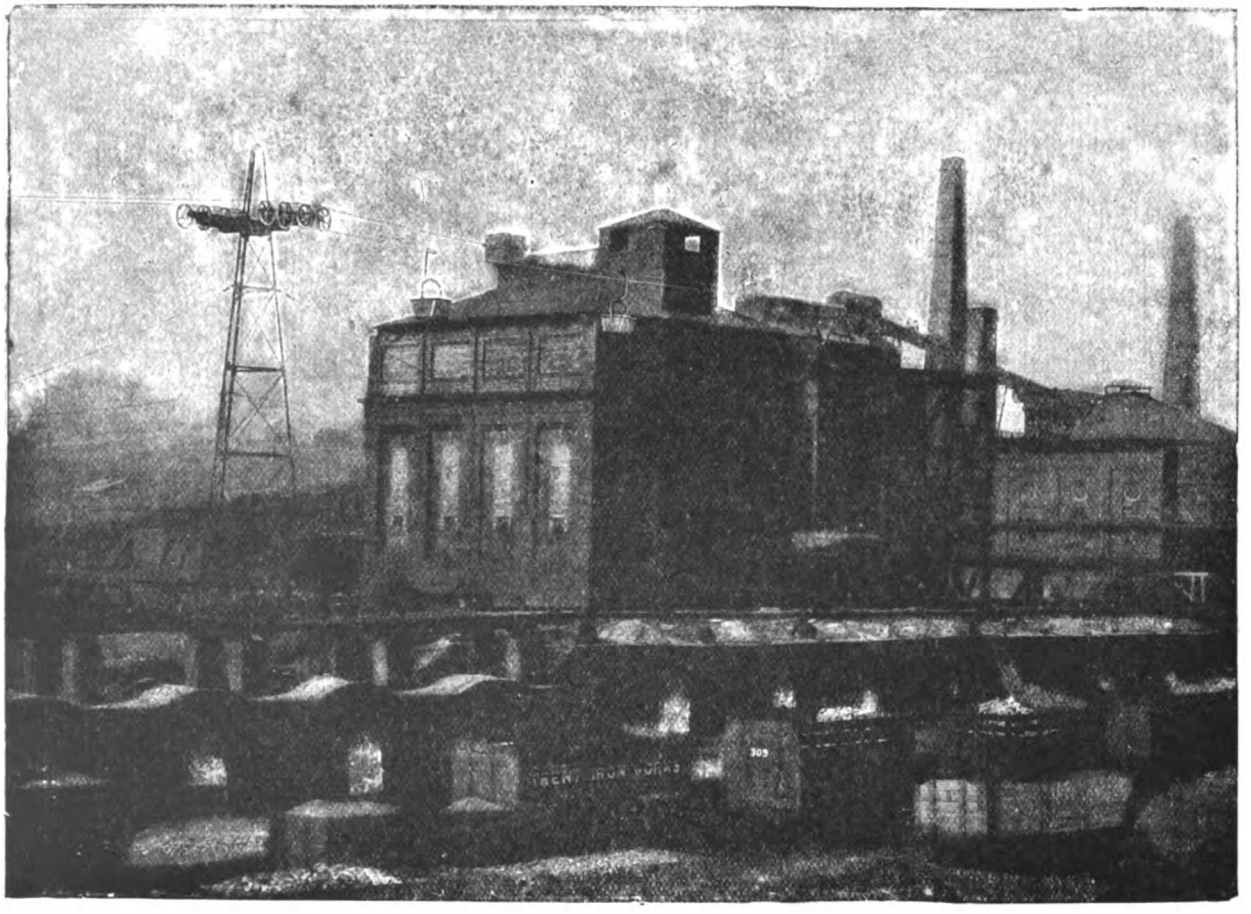

FIG. 1234.—ROPEWAY OVER COLLIERY YARD.

Fig. 1229 (*see* page 564) shows a discharging station in which the guide pulleys and tension sheave and gear are clearly shown. The buckets in this illustration are discharged directly into railway wagons through shoots, but as a rule a storage bunker is provided at this point.

The power required to work these ropeways is very small. As an example,

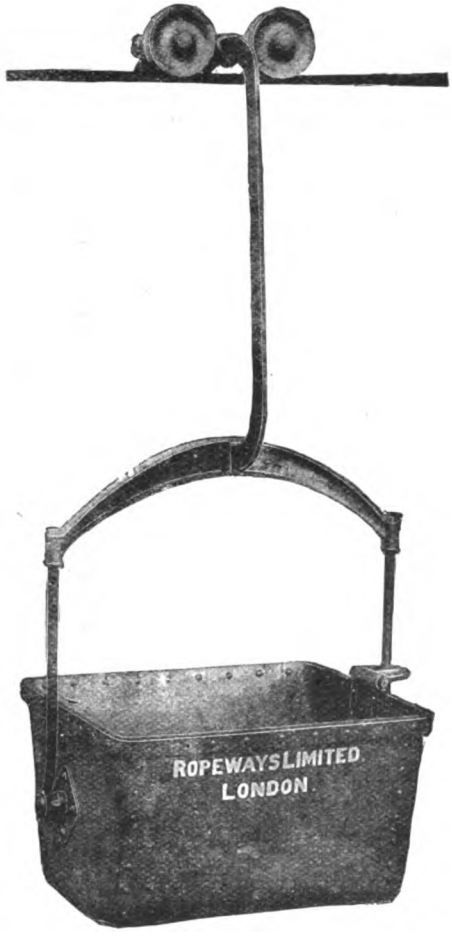

Fig. 1235.—Overhead Ropeway, Ordinary Bucket Carrier.

an instance is quoted where a ropeway conveying 40 tons an hour works automatically on an average down grade of only 1 in 25 over undulating ground, the length of the line being 3,170 yards. In cases where automatic working is obtained, a regulator has to be introduced to keep the line running at a constant speed without the use of a hand brake, necessitating the constant attention of a man. A powerful

hand brake is also provided for stopping and starting the line as shown in figs. 1230 and 1231 (*see* page 565).

Fig. 1232 shows the loading and driving end of a ropeway at Dalbeattie, the unloading end of which is shown in fig. 1229 (page 564), while fig. 1233 shows the

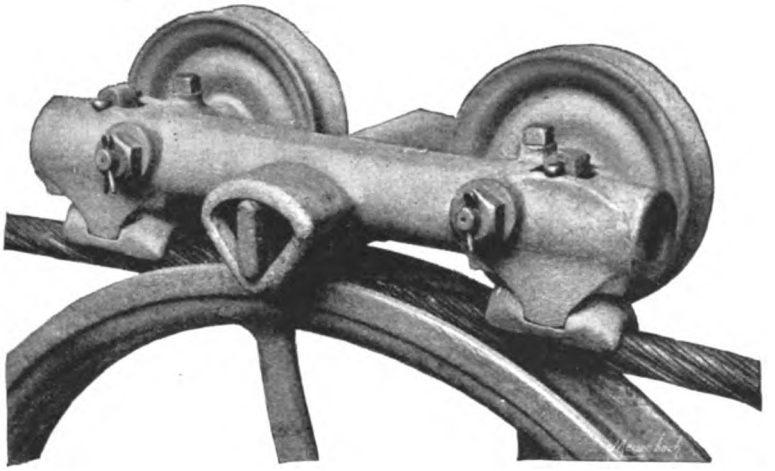

FIG. 1236.—CARRIER ON ROPE PASSING OVER TRESTLE SHEAVES.

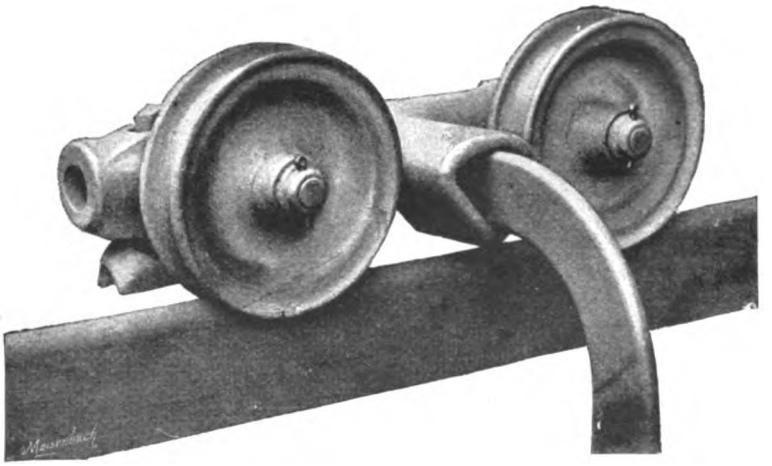

FIG. 1237.—CARRIER ON WHEELS PASSING OVER SHUNT RAIL.

unloading station of another ropeway where the carrier consists of a cage loaded with a tram or tub, and shows the cage just being set down for the tub to be taken off. This view also shows another method for adjusting the tension, by means of a long screw, which, however, is not so good as by means of a balance weight.

Fig. 1234 illustrates a ropeway conveying 90 tons per hour from a pit to washeries, passing over coke ovens, sidings and buildings in a colliery yard in Yorkshire.

The carriers may be made to suit any purpose, the ordinary bucket being shown in fig. 1235. The wheels shown on the carrier are merely for running on the shunt rails while being loaded or discharged, but are clear of the rope. This is better illustrated in fig. 1236, which shows the carrier supported by the clips on the rope passing over a trestle sheave, and fig. 1237, which shows the carrier wheels on the shunt rail and the clips clear.

Bibliography.—North of England Institute of Mining and Mechanical Engineers: Report of Tail Rope Committee, vol. xvii.; "Lubricating Coal Tubs," by Mr. Emerson Bainbridge, vols. xxv. and xxvii. Federated Institution of Mining Engineers: "Endless Rope Haulage at Thorncliffe," by Mr. W. H. Chambers, vol. iii.; "Cost of Putting and Driving," by Messrs. T. E. Forster and F. R. Simpson, vol. xv.; "Improved Construction of Rail Joints," by Mr. J. Bentley, vol. xxxii. British Society of Mining Students: "Endless Rope Haulage at South Derwent Colliery," by Mr. H. W. Hughes, and "At Castle Eden Colliery," by Mr. W. Bell, vol. xiii.; "Lubrication of Pit Tubs," by Mr. Harry Palmer, vol. xxviii. p. 78. Mining Institute of Scotland: "Descriptions of Colliery Hutches," vol. xiii; "Hutch Wheels," by Mr. G. A. Mitchell," vol. xiii.; "Tail Rope Haulage at Earnock Colliery," by Mr. Gilchrist, vi.; "Endless Rope Haulage at Cadzow Colliery," by Mr. D. Ferguson, vol. vii.; "Fife System of Cut Chain Haulage on Inclines," by Mr. Andrew, vol. ii.; *Colliery Guardian*, vol. lxxxiii., for description of Deutz benzine locomotive; "Text Book on Coal Mining," by Mr. H. W. Hughes; "Colliery Manager's Handbook," by Caleb Pamely; "Haulage and Winding Appliances Used in Mines," by Carl Volk.

CHAPTER VIII.

PUMPING.

FROM an historical point of view, the pumping engine is the most interesting of all applications of the steam engine, as the very earliest employment of steam for commercial purposes was for raising water, and it was the enormous expense and difficulties in connection with mine drainage that led to its development. Engine builders, in the early days of the Cornish pumping engine, vied with each other to obtain the most economical results, and then, as even at the present time, the slow-speed steam pumping engine was more economical in fuel consumption than any other type of steam engine.

The question of mine drainage is one of extreme importance, inasmuch as it is a direct cost upon the profits derived from the working of a colliery, and consequently the quantity of water, and the manner in which it is dealt with, may make all the difference between keeping open and closing the mine. In addition to the actual cost of pumping there is always the risk of a breakdown and the rising water interfering with—if not actually stopping—work, thus adding to the charge upon the profits of the concern.

For many years the vertical, slow-speed beam pumping engine, working either forcing or lifting sets in the shaft, held undisputed sway, and even at the present time, for economy and regularity in working, is hard to beat. The main objection to this type is the heavy first cost of installation and the enormous damage resulting from a breakdown, and consequently to reduce both, direct-acting forcing engines are now often installed at the pit bottom. These, however, are not so economical if—as might be expected—steam is to be taken from the surface down the pit. They are, however, less costly, as the pump is part and parcel of the engine; everything is compact on one bed-plate, and all the heavy pit work is avoided. The objection to the engine being below ground is that in the event of a serious breakdown the engine might be drowned, which risk more or less depends upon the size of the water "standage" or reservoir into which all the water from the pit drains and whence it is pumped.

The question of the reservoir capacity is of importance in deciding whether the engine shall be on the surface or below ground. At many collieries there are two

engines—one below and one on the surface—but this is really a capital charge which might be avoided, and there seems to be no reason why there should be two engines, provided there is enough storage capacity, but in any case there should never be less than twelve hours' supply unless the conditions of the pit are such that a larger reservoir is impossible, in which case the engine ought to be upon the surface.

The reservoir merely consists of old dip workings made as large as possible, and covering a sufficient area to form a gathering ground for the water to collect in, for, say, a period of twelve hours. This means that the engine can only stand for this period of time, or the water will overflow from the reservoir, into the main roads of the mine. Where it is possible, therefore, it is always an advantage to have standage for, say, one, two or three days, and such time is the period available for the carrying out of any repairs to a breakdown of the engine, and really affects the question as to whether one or two engines should be installed. It may be taken, however, that it is cheaper and better as a rule to construct large reservoirs so that one engine may safely do the work than to have a small reservoir and two engines.

Pumps for sinking have already been dealt with under the head of "Sinking," and the choice of a pump depends upon the temporary character or otherwise of the requirements. Very often a quantity of water met with in sinking may be permanently tubbed off, but the ruling factor is the quantity. If a large quantity is met with, then tubbing is the cheaper plan to adopt, but if the quantity is only small it may be cheaper to put in a small permanent pump to deal with it. It is purely a question of initial capital expenditure.

Small quantities of water may be permanently dealt with by winding either with a special cage or tank, which is suspended below the main cage, or by water tubs placed in the cage. Very often fairly large quantities of water can be dealt with in this manner, where conditions as to labour are suitable, with economical results. It has the great advantage that no large capital expenditure is required, and there is practically nothing to go wrong. Figs. 1238 and 1239 show a water cage by Messrs. Jos. Cook, Sons and Co. Limited, which is arranged to run in end guides. The bottom is wedge-shaped, and each side is fitted with a pair of leather-faced doors or "clacks" for the inlet of the water as the cage descends into the sump, and an end clack worked automatically by the tappet rod and levers, as shown, opens to let out the water on reaching the surface. Another cage by Messrs. Hudson is shown in fig. 1240. In this case the tank is bolted by separate hangers to the bottom hoop of the cage, and is only provided with two clacks, one at each end, which are opened by means of the tappet levers at the surface, delivery taking place at either side of the shaft. An arrangement for water tubs in

the cage is shown in fig. 1241, in which the bottom clack is kept open with a bent lever by the banksman; other cases are arranged in which the discharge is automatic, dispensing with the services of a banksman, where this can be done.

The quantity of water dealt with, of course, depends upon the capacity of the tank, and the number of winds that can be made per hour, but, of course, there must be sufficient reservoir capacity to gather the water during the coal-drawing period. In America, special compartments are arranged in a shaft for winding water, special winding engines being put down for that purpose. The tanks are arranged to be self-tipping by arranging them with side wheels, which run upon a short inclined plane on reaching the surface, so as quickly to discharge the contents into a large basin. A simple calculation will show that, supposing the tank is capable of holding 500 gallons, and the engine can make two winds per

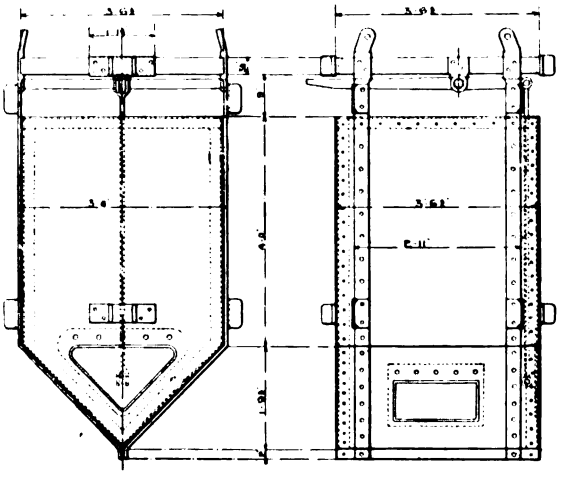

FIGS. 1238 AND 1239.—WATER DRAWING CAGE OR TANK.

minute, the quantity dealt with is 1,000 gallons per minute, but if the depth is over, say, 600 ft., it is very doubtful if winding is a satisfactory or economical method of dealing with mine drainage. A complete equipment for winding would probably cost as much as a pumping engine, and certainly the wear and tear of ropes must be very great.

Where it is known that permanent pumps will be required after sinking, and a quantity of water is to be dealt with both during and after sinking, the question of putting down the permanent engine at once to work the sinking pumps should be considered. This means, of course, that the engine must be placed on the surface, and all the objections to heavy moving masses in the shaft retained. The

LIBRARY
OF THE
UNIVERSITY
OF

Fig. 1242.

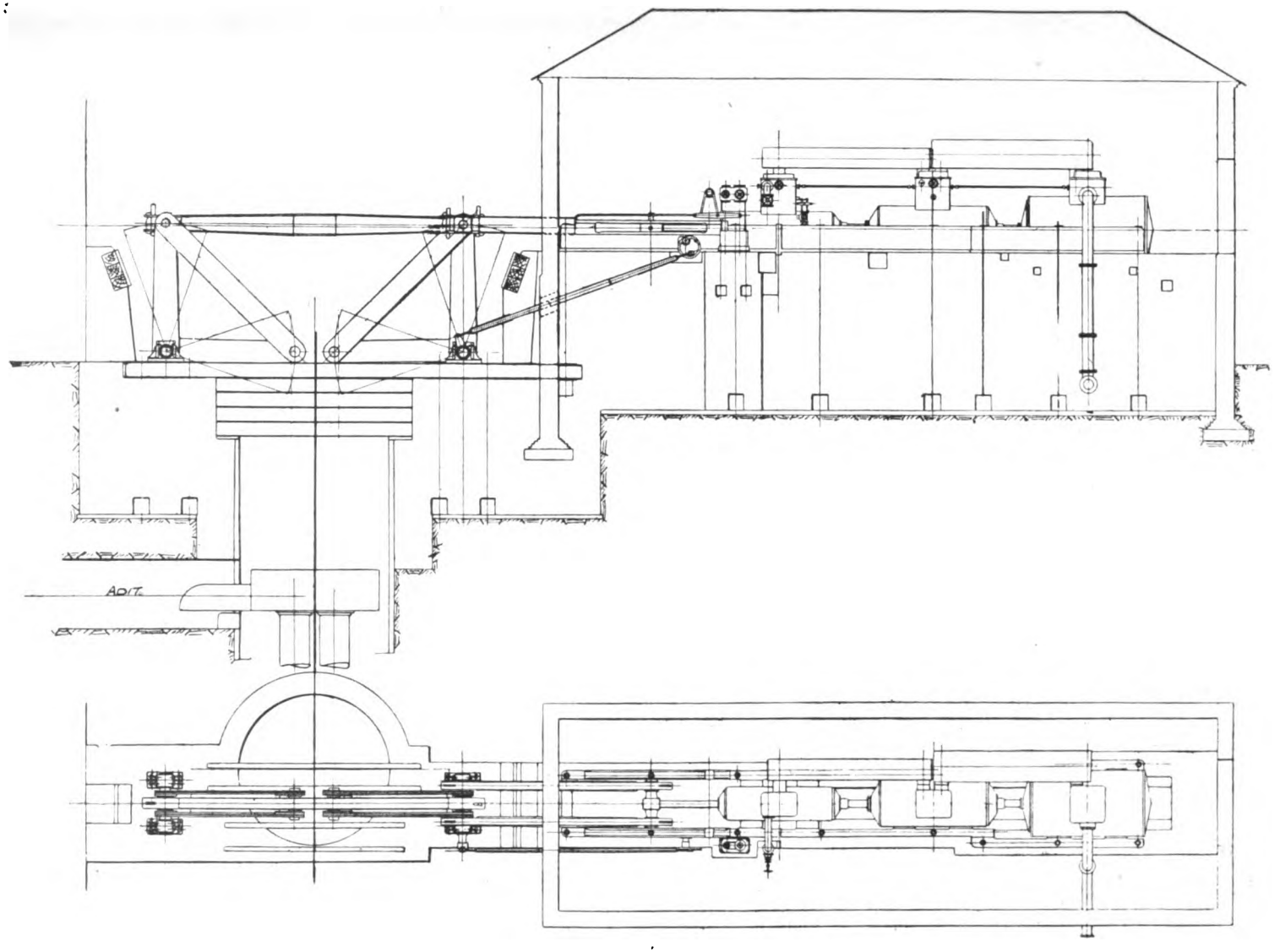

Fig. 1243.

Figs. 1242 and 1243.—General Arrangement of Engine by Hathorn, Davey and Co.

FIG. 1244.

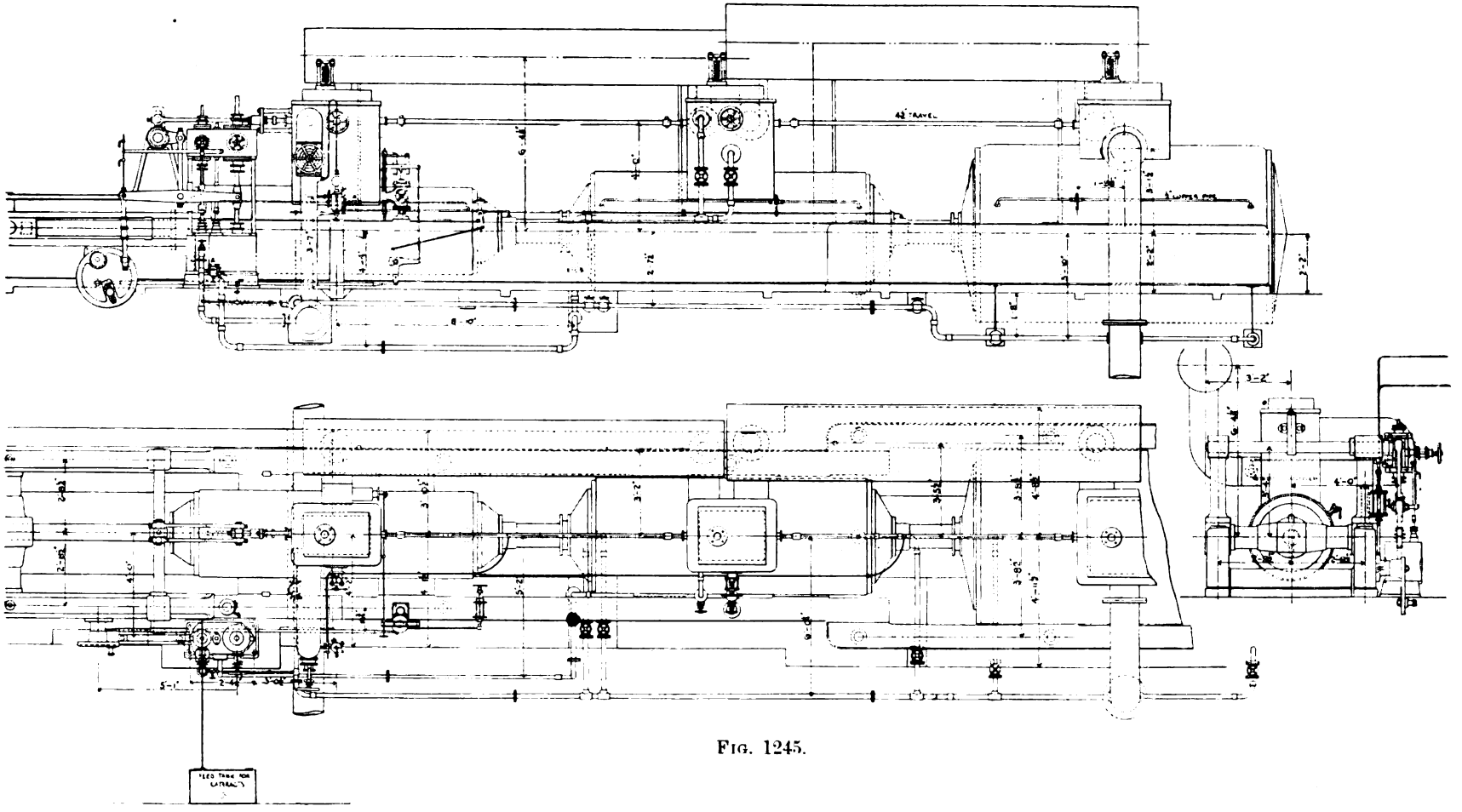

FIG. 1245.

FIGS. 1244 AND 1245.—HATHORN, DAVEY MAINSFORTH ENGINE.

alternative is, of course, to adopt temporary pumping plant to deal with the water until the pits are down and the engine fixed at the pit bottom, and if more water is expected during sinking than when the seam is being worked, then the latter is undoubtedly the best method.

At Mainsforth Colliery, a quantity of water was met with during the sinking, and it was also expected that fairly heavy pumping plant would be required after the pits were down. It was decided, therefore, to instal the permanent engine at once, and arrange temporary bucket pumps in the sinking pit, which were replaced by the permanent forcing pumps at the conclusion of the work. The whole of the pumping plant was supplied by Messrs. Hathorn, Davey and Co., of Leeds, who have been kind enough to supply drawings from which the accompanying illustrations have been prepared.

Figs. 1242 and 1243 show a general view of the engine and quadrants, whilst figs. 1244 and 1245 show the general arrangement of the engine, which is a triple-expansion, condensing, direct-acting non-rotative type, fitted with the Davey differential gear, in its latest and most improved form. The pumps are in the upcast pit, over which is erected a headgear provided with a pulley for lifting spears; no coals are wound. The water is delivered into a launder box fitted on top of the rising main pipes, from which it flows into an adit or culvert.

The engine consists of three cylinders, arranged tandem, with steam receivers of large capacity between each cylinder. The valves—situated on top of the cylinders—are actuated through the differential valve gear controlled by cataracts, so that the engine makes a pause at the end of each stroke, which is shown on the left of fig. 1244 close to the high-pressure cylinder. A rocking plate is attached to the bedplate of the engine, which is connected to a short arm on the quadrant gudgeon by means of a connecting rod, as shown in fig. 1242, and, as will be seen in fig. 1244, the journal on the rocking-plate, to which the connection is made, is adjustable by means of a screw, so that the arc through which the rocking-plate moves may be altered, thus altering the stroke of the outer end of the differential valve rod, and through it the stroke of the engine.

Figs. 1246 and 1247 show the general arrangement of the pit work for the temporary wet spear bucket pumps during sinking. The pumps were suspended by means of wood rods, or ground spears 10 in. square, resting upon superimposed steel joists 16 in. deep placed across the pit. As the sinking proceeded it became necessary to deal with the water in two lifts, and figs. 1248 and 1249 show the arrangement of the pumps in the shaft at this stage, while details of the shaft spears and method of fixing pumps is shown in figs. 1250 to 1256. The next operation was the construction of the mid-lodgment and fixing of the permanent ram pump in place of the top lift bucket pump, but retaining the lower one, the arrangement of

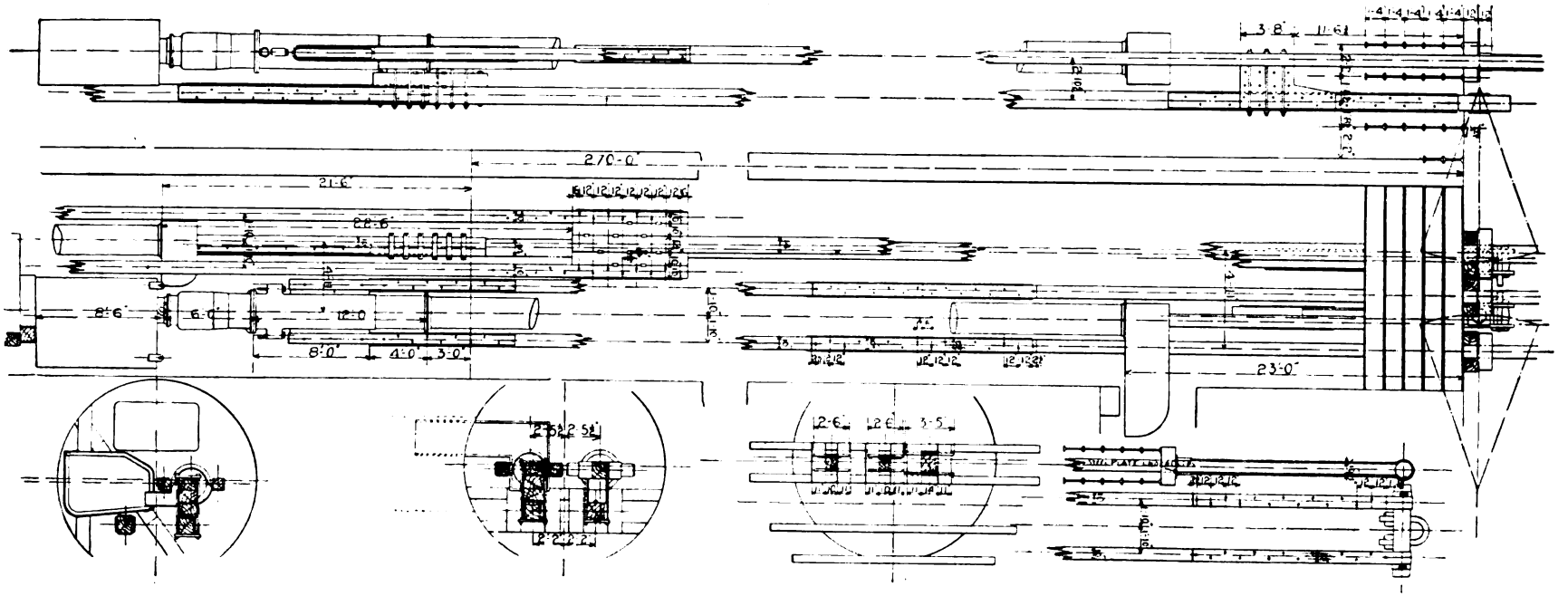

FIGS. 1250 TO 1256.—DETAILS OF SPEARS AND TEMPORARY BUCKET PUMPS.

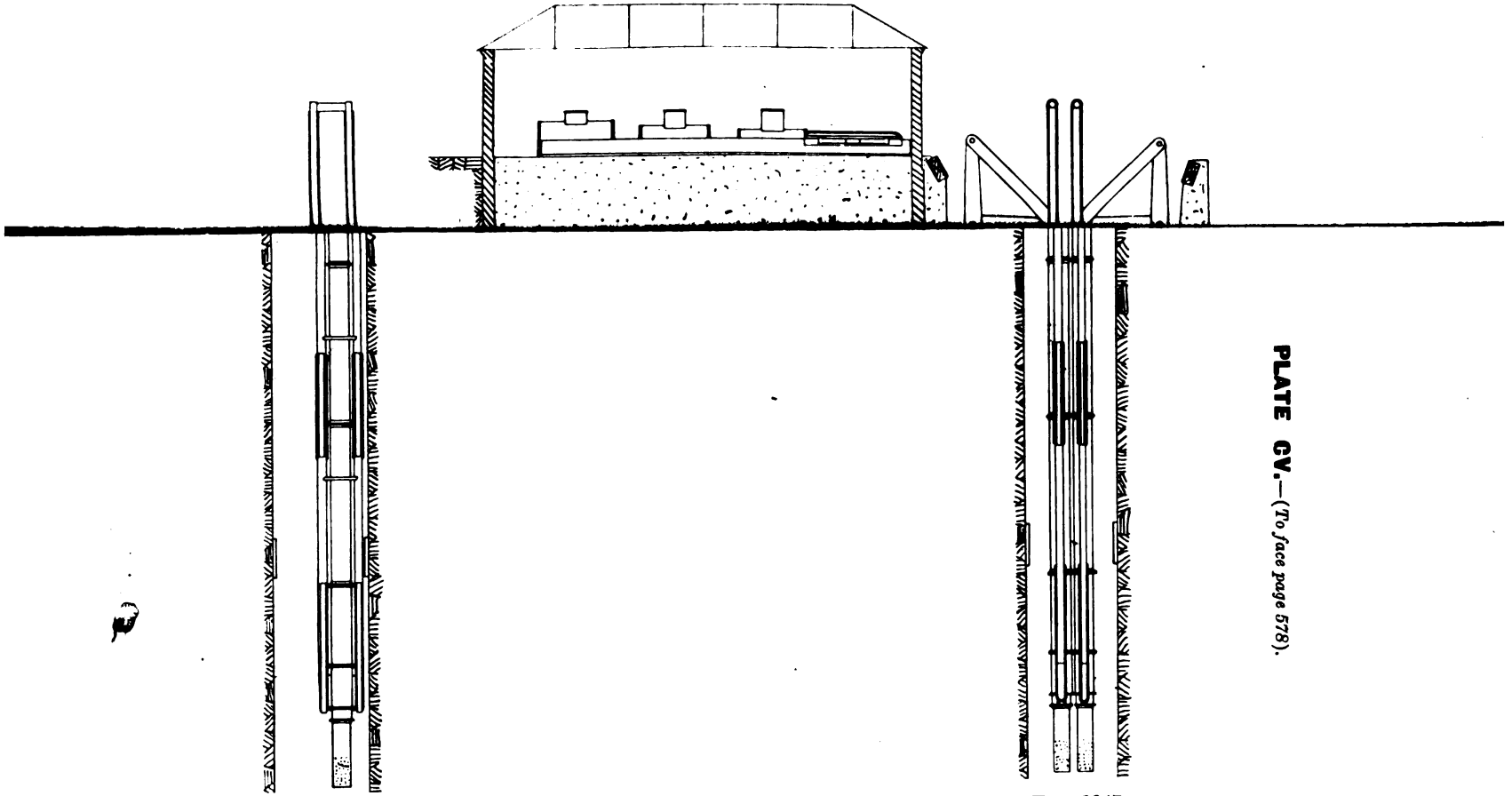

FIG. 1246.

FIG. 1247.

FIGS. 1246 AND 1247.—ARRANGEMENT OF PIT WORK FOR TEMPORARY BUCKET PUMPS.

PLATE CV.—(*To face page 578*).

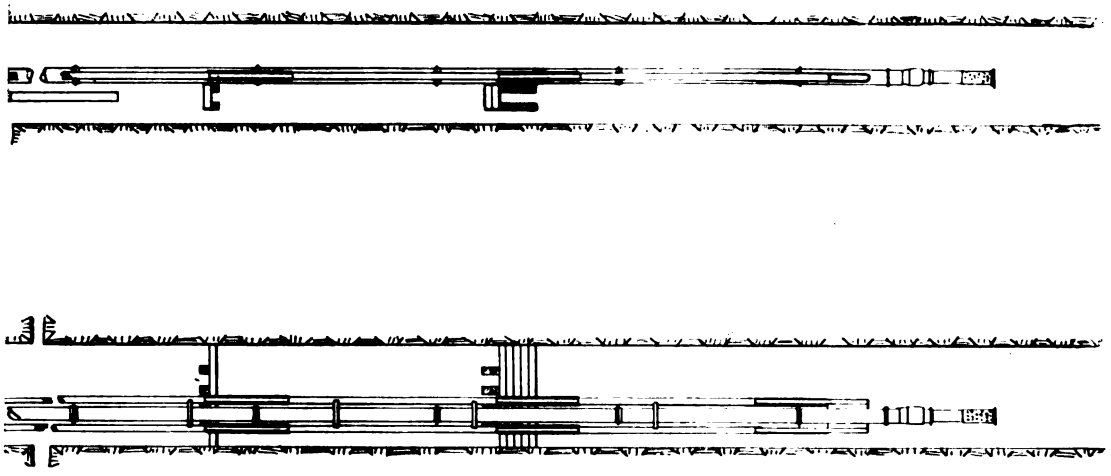

LIBRARY
OF THE
UNIVERSITY
OF
CALIFORNIA

FIGS. 1248 AND 1249.—ARRANGEMENT OF PIT WORK FOR TEMPORARY BUCKET PUMPS.

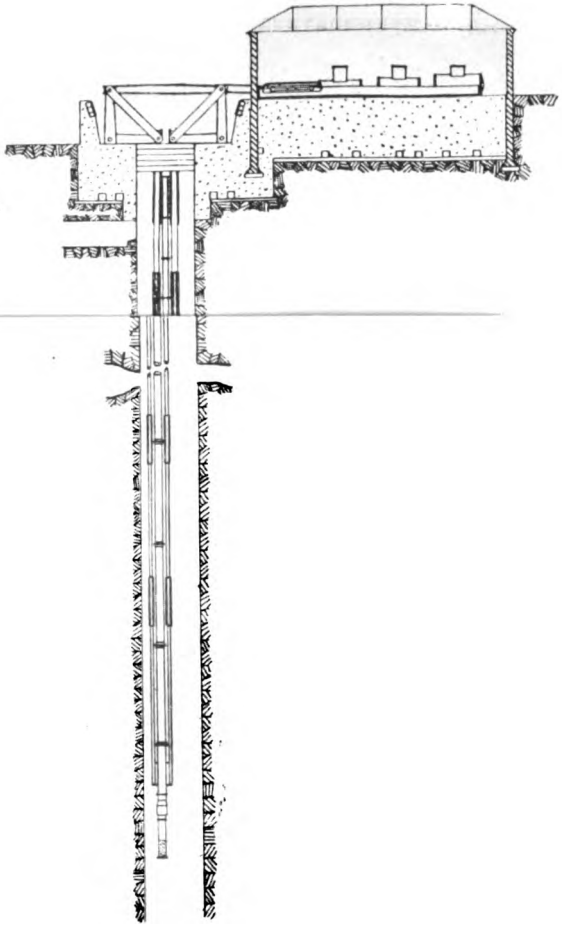

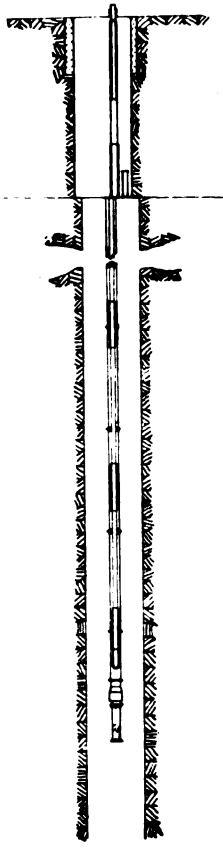

PLATE CVII.

FIG. 1257.

FIG. 1258.

FIGS. 1257 AND 1258.—ARRANGEMENT OF PIT WORK FOR TOP PERMANENT RAM AND TEMPORARY SINKING BUCKET.

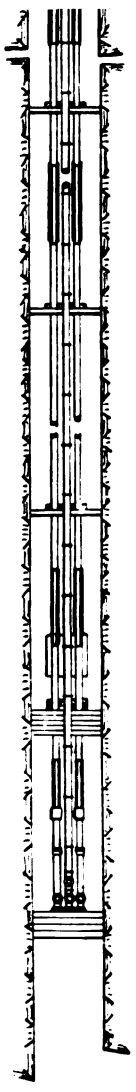

FIG. 1259.

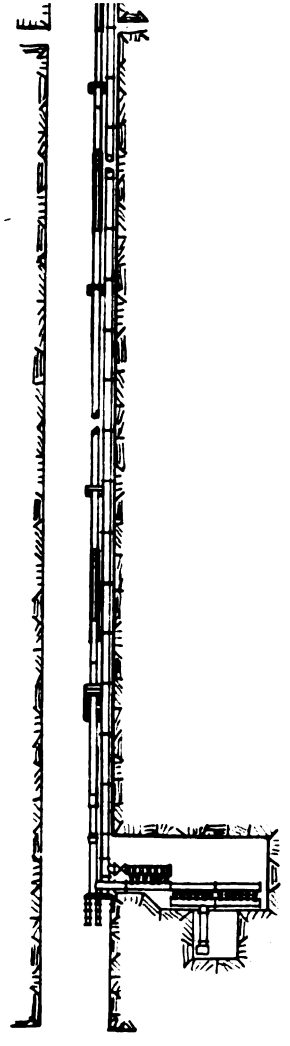

FIG. 1259A.

FIGS. 1259 AND 1259A.—ARRANGEMENT OF PIT WORK FOR PERMANENT RAM PUMPS.

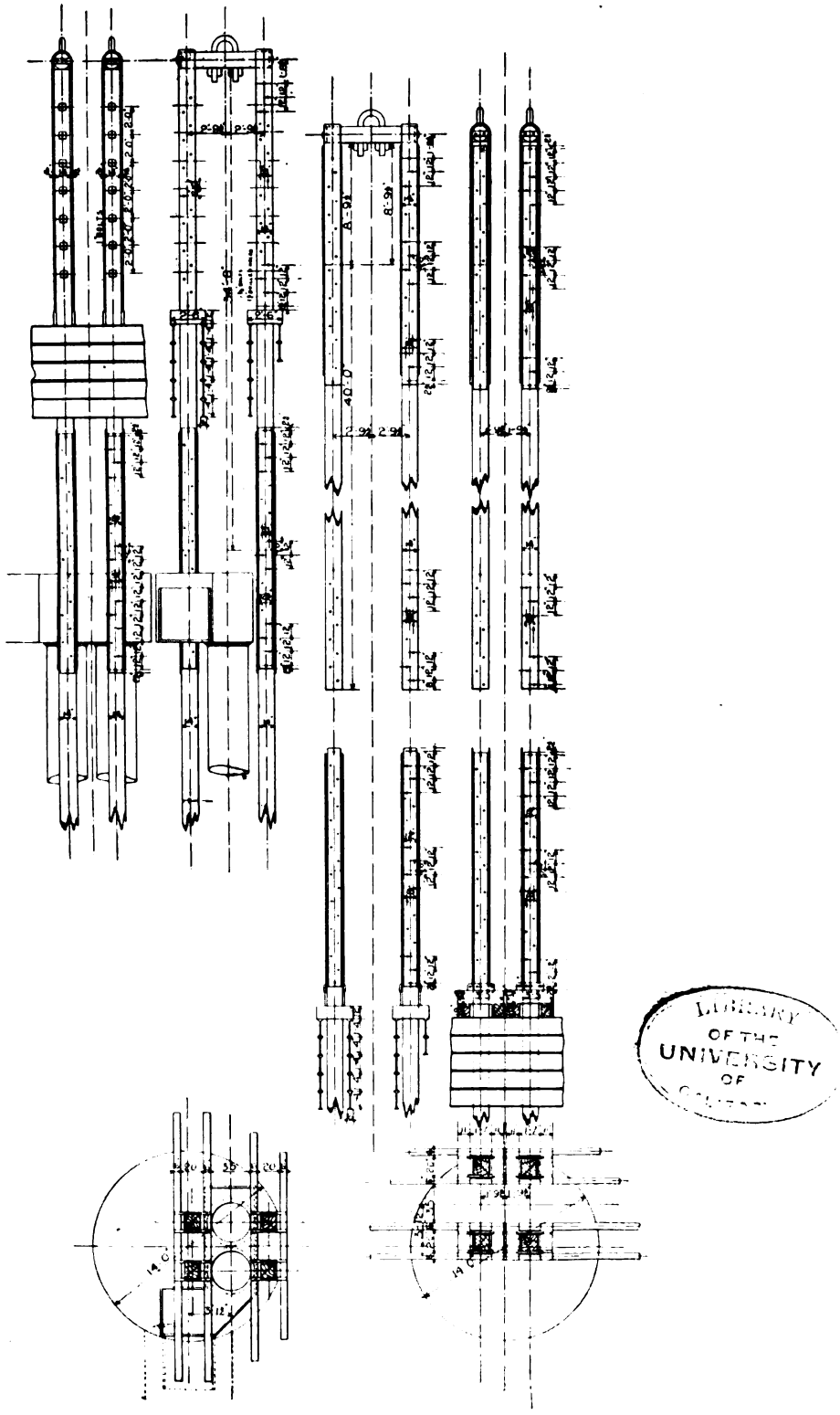

LIBRARY OF THE UNIVERSITY OF

FIGS. 1260 TO 1265.—DETAILS OF HANGING SPEARS OR RODS.

FIG. 1266.

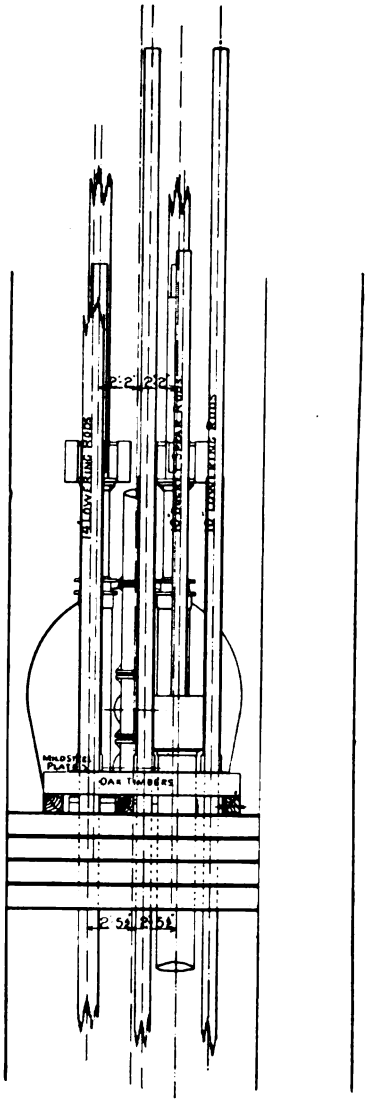

FIG. 1267.

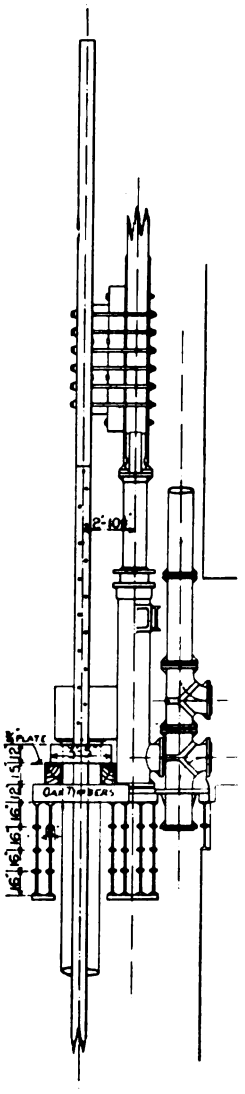

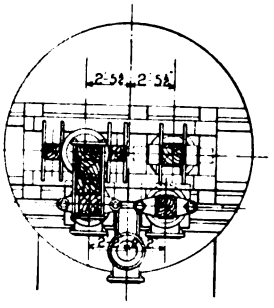

FIG. 1268.—PLAN.

FIGS. 1266 TO 1268.—ARRANGEMENT SHOWING CONNECTIONS OF SPEARS FOR PERMANENT TOP RAM AND LOWER TEMPORARY SINKING BUCKET.

this work being shown in figs. 1257 and 1258, and finally figs. 1259 and 1259A show the arrangement of pit work for the permanent ram pumps, arranged to deal with the water in two lifts. Figs. 1260 to 1265 show details of the lowering or hanging rods for the bucket pumps, while figs. 1266 to 1268 show details of spears and connection between the temporary bucket pump and top permanent ram pump, and figs. 1269, 1270 and 1271 show details of the dry spears for the permanent ram pumps, figs. 1272 and 1273 detail of the quadrant, and figs. 1274, 1275 and 1276 detail of ram head connection, while the "spear rod ends" for coupling to quadrant gudgeon are shown in figs. 1277 and 1278. The arrangement of valve chamber and valves for the permanent pumps is shown in figs. 1279, 1280 and 1281.

For sinking purposes the bucket pump is necessary, and undoubtedly answers its purpose very well (*see* Chapter II.), but for permanent work the forcing pump is better, mainly on account of its reliability, and the lessened cost of upkeep. With the bucket pump the cost of changing buckets is heavy, especially for labour, as at least two men are engaged at the pump, and in addition there is the bank attendant and engineman. A bucket may go for weeks without requiring to be changed, whilst on the other hand it may require changing in an hour, so much depends upon the character of the water, and the nature of the bucket packing and falls, the former of which usually consists of guttapercha, and the latter being the leather facing under the clacks. The only advantage that can be claimed for the bucket pump is that both the bucket and foot valve or "clack" can be changed from the surface, or "over the top" as it is expressed, in the case of the pump being drowned. A drowned forcing ram pump would depend upon the gland packing and valves keeping in order; consequently, should either fail the pump would be useless, and could not be got at for repairs.

A bucket pump, as is well known, consists of a piston or "bucket," having a valve or "clack" on its upper side, which fits tightly in a working barrel, and in which it is moved up and down by means of pump rods or spears. Immediately below the working barrel is placed the "clack piece," which consists of a length of pipe with a seat for the "clack" and a door for changing and examining it; and below this again is the suction pipe ending in a "snore" at the bottom—this length is termed the "snore piece." Above the working barrel is another length of pipe provided with a door for changing the bucket, and above this are the rising main pipes. At the level of the "bucket door" and the "clack door," are fixed two scaffolds for working upon. The pump is always placed in a sump below the working level of the cages, and communication is obtained between the different levels by means of ladders. In all cases to complete the equipment there must be strong overhead gear, of wood or iron, fitted with pulleys for the "crab" and "jack" ropes. The former is a strong flexible rope capable of dealing with lifts

Fig. 1269.

Fig. 1270.

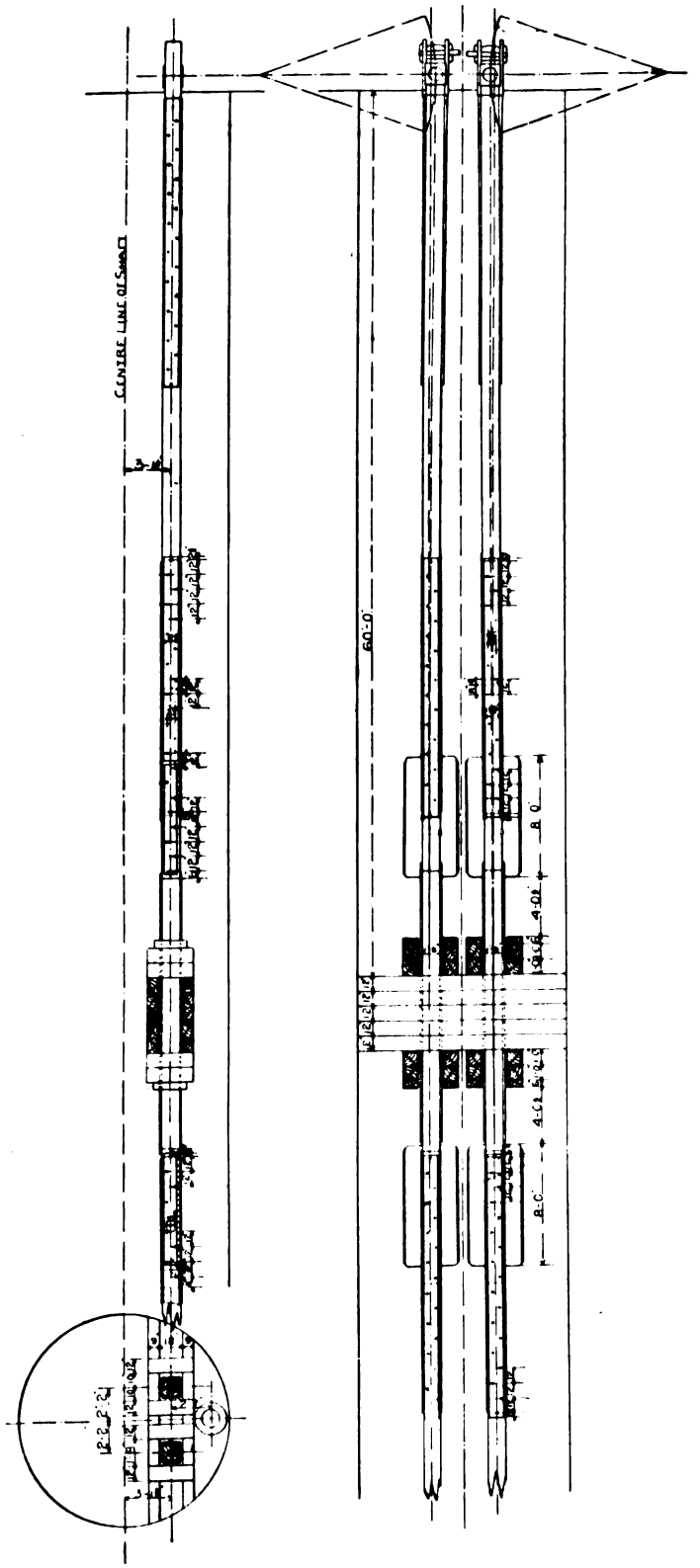

Fig. 1271.

Figs. 1269 to 1271.—Details of Permanent Ram Spears.

of several tons in weight, while the jack rope is a smaller rope used for lowering shaft men in a loop, or for lowering or raising smaller weights. An engine is provided for each rope, the former being geared down for slow speeds, while the latter is capable of higher speeds.

The bucket consists of a cast iron hoop through which passes the sword piece as shown in fig. 1282, which gives the arrangement of bucket, sword piece and

FIG. 1272.

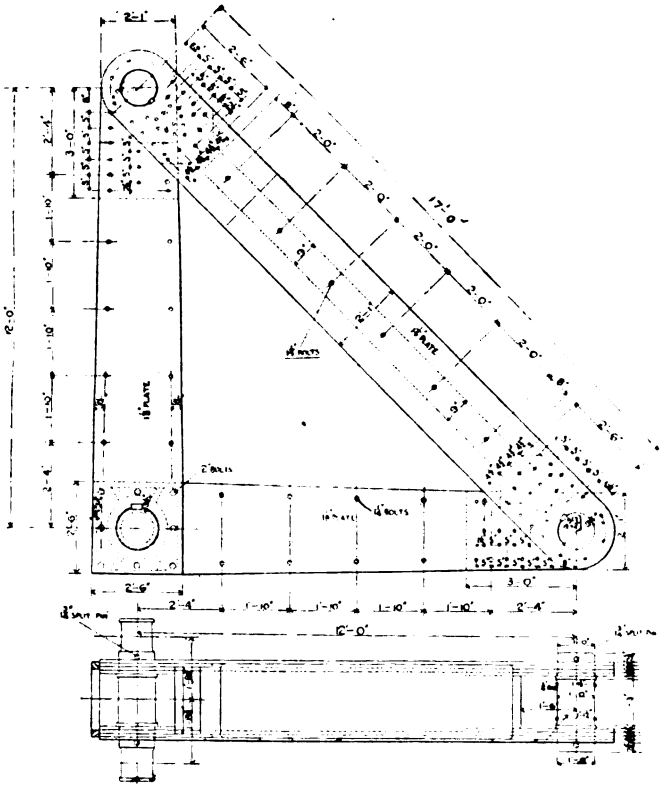

FIG. 1273.

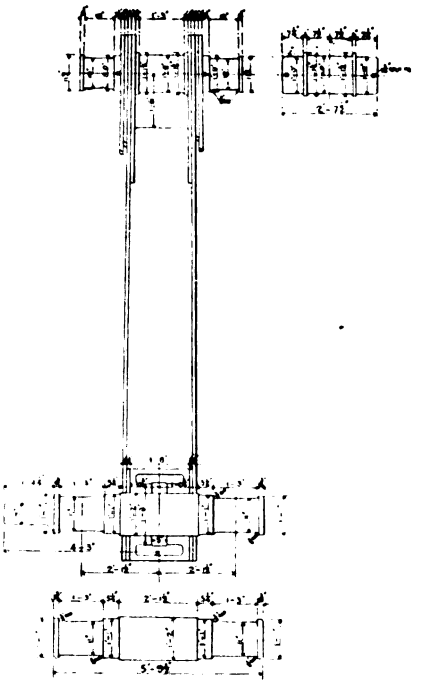

FIGS. 1272 AND 1273.—HATHORN DAVEY MAINSFORTH ENGINE: QUADRANT.

Y-end for connecting to the spear, *in situ* in the working barrel. Details of these are shown in figs. 1283 to 1291. The cast iron bucket is tapered, and around it fits the leather or gutta-percha jacket, which is held in place by an iron or mild steel hoop which fits closely. Below the hoop is arranged a cross-bar, which allows the " sword " to project just sufficient to allow the tapered cotter to enter the hole. The cast iron block, however, has fitted on its top side the " falls," which consist of four or five thicknesses of leather with an iron plate, half-moon shaped, riveted

FIG. 1274.

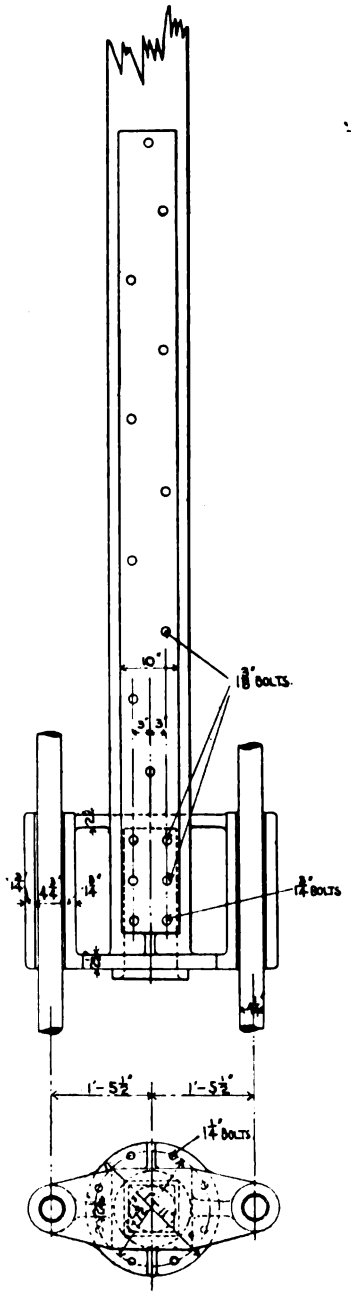

FIG. 1275.

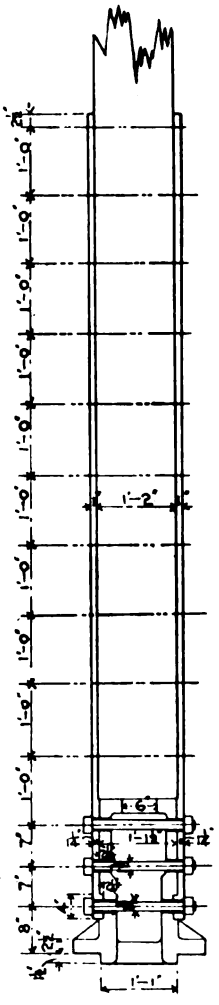

FIG. 1276.

FIGS. 1274 TO 1276.—DETAILS OF RAM HEAD CONNECTION.

on either side, and upon this rests the shoulder of the sword piece. The cotters are then driven in by sledge hammers until everything is thoroughly tightened up. The gutta-percha jacket should project above the thickness of the falls so as to contain them, so to speak. The working barrel is always "bell-mouthed" at the top, and the bucket should "run out." The pipes are always about an inch larger in diameter than the bucket or working barrel, and the spears work inside them, though in some cases "dry spear" bucket pumps are constructed which necessitate a separate working barrel provided with a stuffing-box and gland through which the rod works; they are, however, seldom employed. The "clack" or foot valve is similarly constructed, but is fitted with a bow as shown in figs. 1292, 1293 and 1294, so that it may be drawn by means of the spring "fish-tail," which consists of a pair of prongs in a heart-shaped forging which are thrust inwards on being passed through the hoop, but spring outwards again and cannot be withdrawn. Another, and probably better, method is to arrange the valve spindle with a "mushroom"-shaped top, over which fishing tackle passes but cannot return. These devices are practically a necessity in a sinking pit.

The method of fixing the falls in the foregoing is bad, as the hinge is merely formed by the elasticity of the leather, which soon—unless of the very finest quality—cracks and breaks. A better method is shown in figs. 1295 and 1296, where the fall is hinged through the shoulder of the sword piece. Stops are also provided to limit the opening of the falls.

The old type of bucket and clack doors were made of elm wood faced with lead and leather, and secured by strong iron cross bars, but these have been displaced by heavy cast iron doors strengthened by ribs. The best form is circular.

Spears consist of pitch-pine rods from 30 ft. to 50 ft. in length, carefully selected and varying from 4 in. to 20 in. square, or even larger. They are connected together by strong iron plates with square-headed bolts. The joint may be as shown in fig. 1298 or merely butt together. The top and bottom spears are fitted to forks or Y's, the former being fitted with brass steps for the quadrant gudgeon. Details of these are shown in figs. 1297 to 1299.

Wrought iron or steel spears have been employed in some cases, but are not so reliable or so suitable as wood, on account of the trouble usually experienced with the joints.

Bucket pumps are usually limited to a lift of about 40 to 50 fathoms, but plunger pumps may be employed either on the surface or direct-acting underground for lifts of over 200 fathoms.

Figs. 1300, 1301 and 1302 illustrate the general arrangement of the connections between two shafts at Broomhill Colliery, in one of which is placed a pair of bucket pumps, and leading into the other an underground forcing engine.

Fig. 1277.

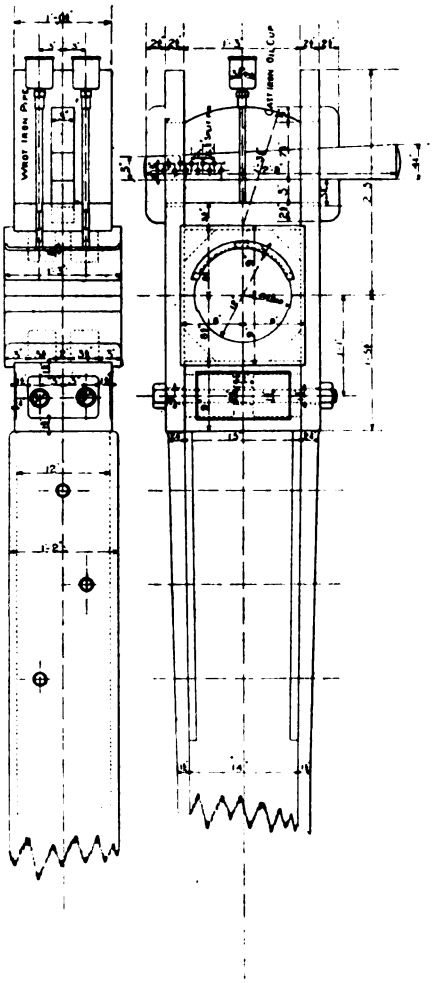

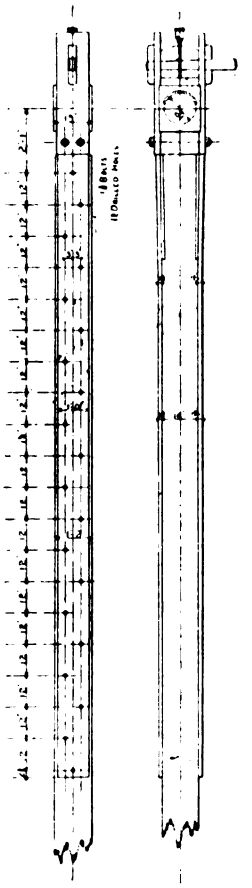

Fig. 1278.

Figs. 1277 and 1278.—Hathorn Davey Mainsforth Engine: Spear Rod Ends.

PLATE CX.

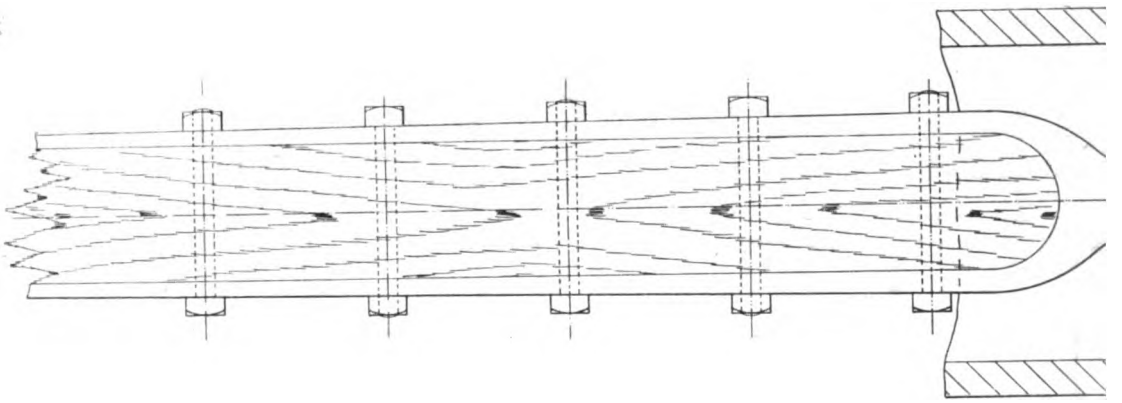

LIBRARY
OF THE
UNIVERSITY
OF

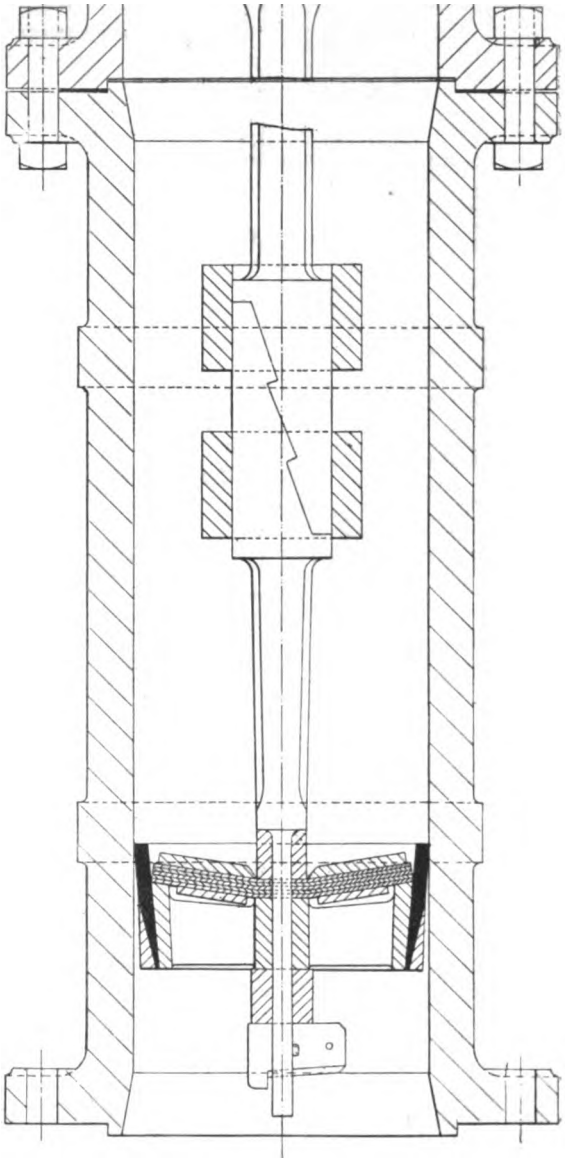

FIG. 1282.—COMMON BUCKET PUMP.

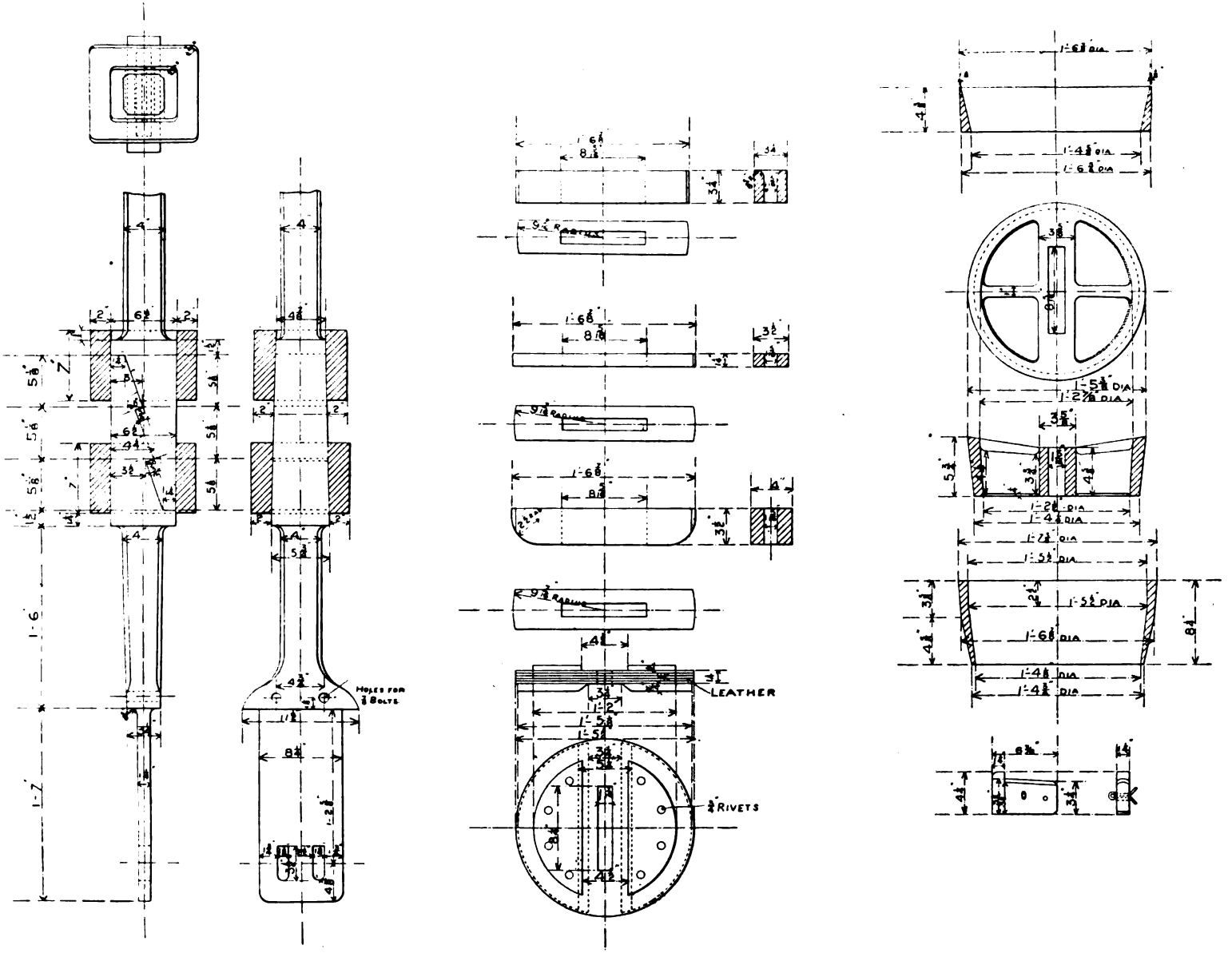

FIGS. 1283 TO 1291.—DETAILS OF BUCKET PUMP.

Fig. 1293.

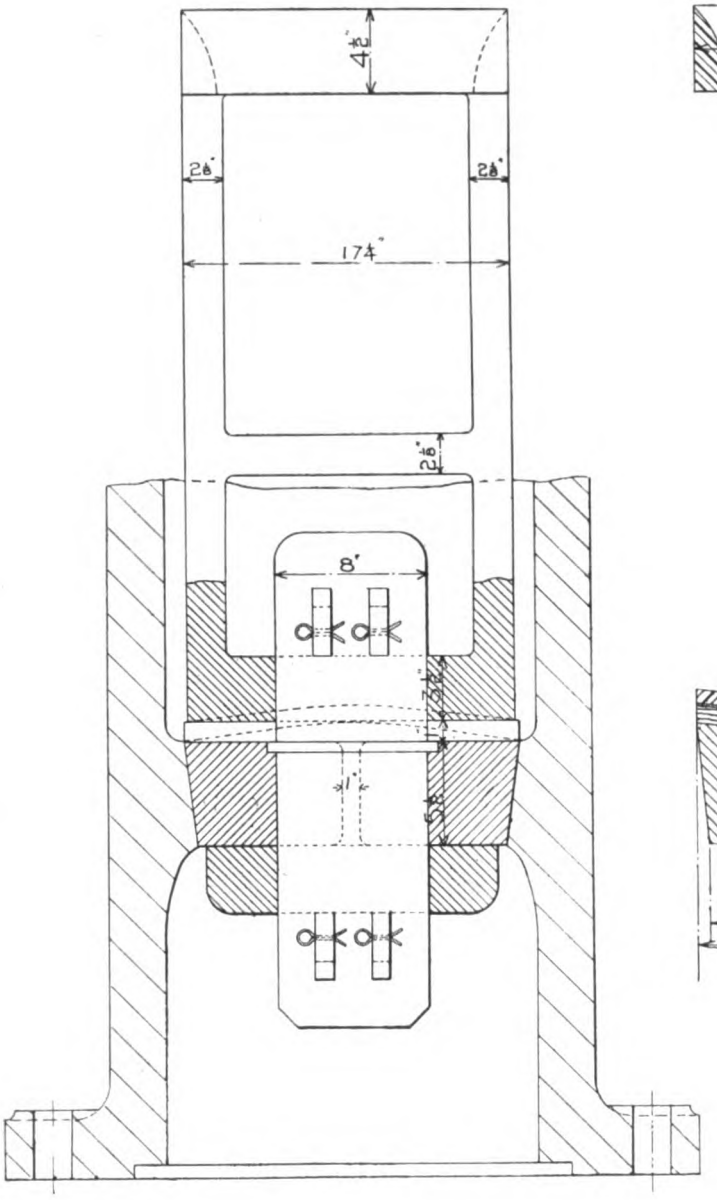

Fig. 1292.

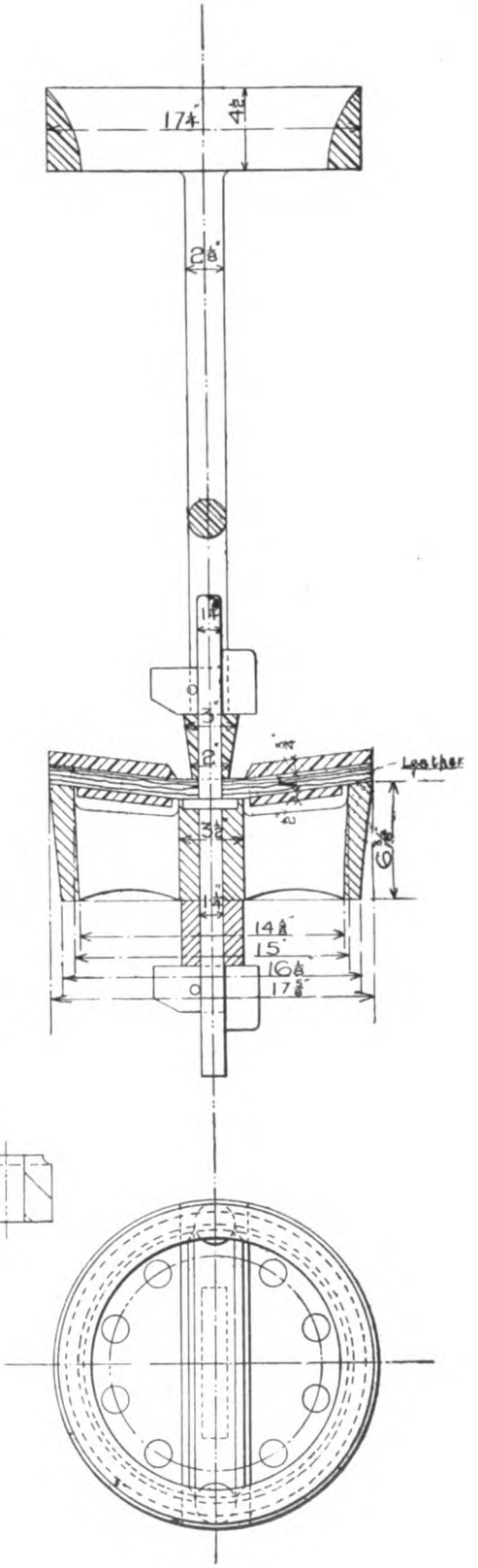

Fig. 1294.

Figs. 1292 to 1294.—Bucket Pump: Foot or Clack Valve (*See* page 585).

Both pumps are placed below the level of the "standage" or lodgment, whence the water is conducted in pipes, leading through a dam, into the sump in which the bucket pumps are placed. These pipes end in stop valves, so that the water may be entirely shut off and the water drained off below the lower or clack scaffold. At the bottom of the sump a drift is driven in a straight line to the other shaft, this drift passing immediately below the

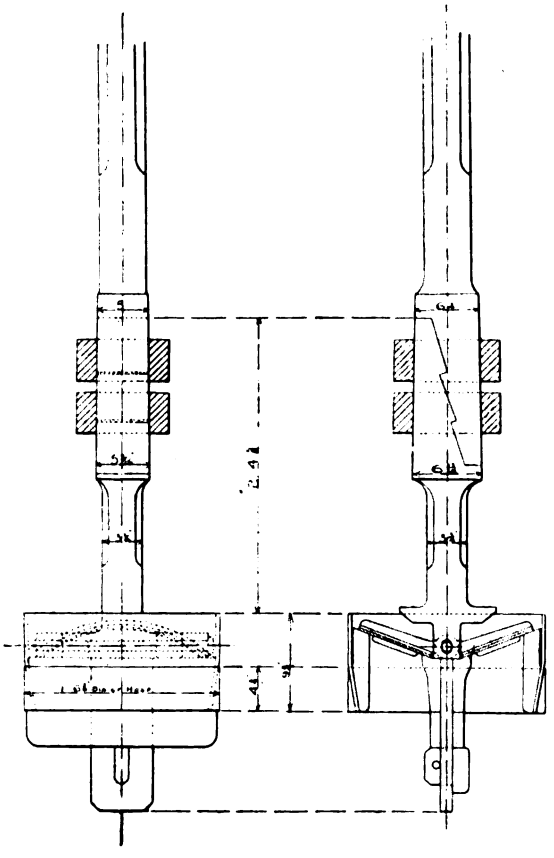

FIGS. 1295 AND 1296.—PUMP BUCKET (*See* page 585).

engine-room, in which is placed the forcing engine. A pair of dams are built in this drift, as shown, pipes provided with valves passing through them so that the water may be shut off at either end. The engine-room is approached by means of a staple, in which ladders are fixed, from a drift at a higher level, and as the engine-room leads into the upcast shaft this drift is provided with an air lock. A staple—not shown on the drawing—gives communication to the under or water drift at a

point about the middle of the two dams, and the middle dam is further provided with a manhole with doors, in order to meet any emergency. When the bucket or "bank" pumping engine is at work, the valves are opened by means of the long rods and hand-wheel at the cage scaffold, and the water allowed to flow into the sump; but if the underground engine is to work, the other valve is opened and the

FIG. 1297. FIG. 1298. FIG. 1299.

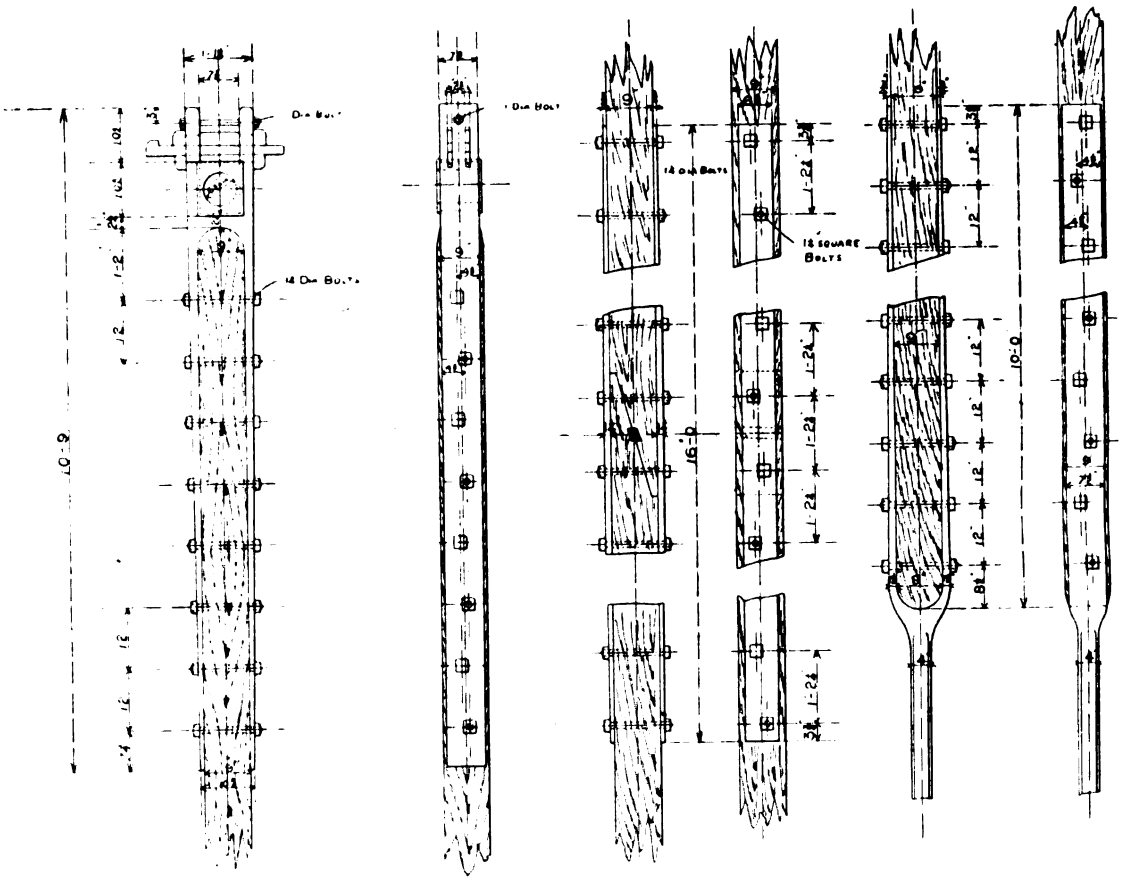

FIGS. 1297 TO 1299.—DETAILS OF SPEARS (*See* page 585).

water allowed to flow into the drift, and from the drift into the suction sump of the forcing engine, which can be regulated by the valve, as shown.

The space between the dams gradually fills with silt and mud, and may be termed a "mud-trap," and occasionally requires to be cleaned out. The sump, however, requires to be cleaned more frequently.

The forcing engine is a single-cylinder double-acting condensing engine, with a differential valve gear controlled by a subsidiary steam cylinder and cataract. As the engine is placed below the lodgment level, the water, if allowed to flow uninterruptedly, would rise in the shaft above the engine, and consequently the injection water flows into the condenser, being led to it by a pipe built into the dam. Another pipe rises in the staple, to which is fitted a long gauge glass to indicate the height of water in the lodgment. In the other pit the height of water is shown upon an indicator in the bank engine-house by means of a sliding weight, which is attached by a flexible wire rope to a "float" in the pit sump.

The steam is brought down the upcast pit, the steam pipes terminating at the shaft bottom, upon which they rest, steam being taken off on a level with the pipe leading to the engine. The rising main is provided with an air vessel and non-return valve, and the engine is arranged to exhaust into the upcast shaft in case anything should go wrong with the condenser. The pump is fitted with double-beat valves, the valve being of brass, and the seat of cast iron with gutta-percha beats. Considerable trouble was experienced with the valves, beats of lignum vitæ and white metal being tried, but without success; white metal, in fact, gave better results than the lignum vitæ. The white metal, however, used to break, and pieces would get out, with the curious result that on one occasion several small pieces got into the working barrel, and were impelled backwards and forwards along the bottom of the barrel, until it was worn so thin that it split from end to end, necessitating the purchase of a new barrel. Gutta-percha, which was first softened and pressed into the dove-tailed recess of the beat, and afterwards turned and faced in a lathe, give the best results. The arrangement of the two engines is such as to safeguard against possible accident to either engine and to afford facilities for reducing trouble in regard to suction pipes and silt. On the installation of the underground engine, which is, as already mentioned, below the level of the lodgment, the suction pipe was connected right through to the valve boxes from the drift, so that the valves were "drowned," so to speak—or, in other words, the head of water above the suction valve, in addition to the pressure of the atmosphere, kept the valves open, with the somewhat singular result that the pump would not work, and it became necessary to break the connection and allow the suction valve to "draw" the water from the sump as shown. The only explanation that can be offered is that the pressure head would not allow the valve to close promptly on the commencement of the return stroke of the ram, with the result that the water was forced back through the suction valve, which it (the ram) failed to close.

A ram-forcing engine acts by displacing the water in the barrel equal to its cubical dimensions, and, as before mentioned, its chief advantage lies in its more

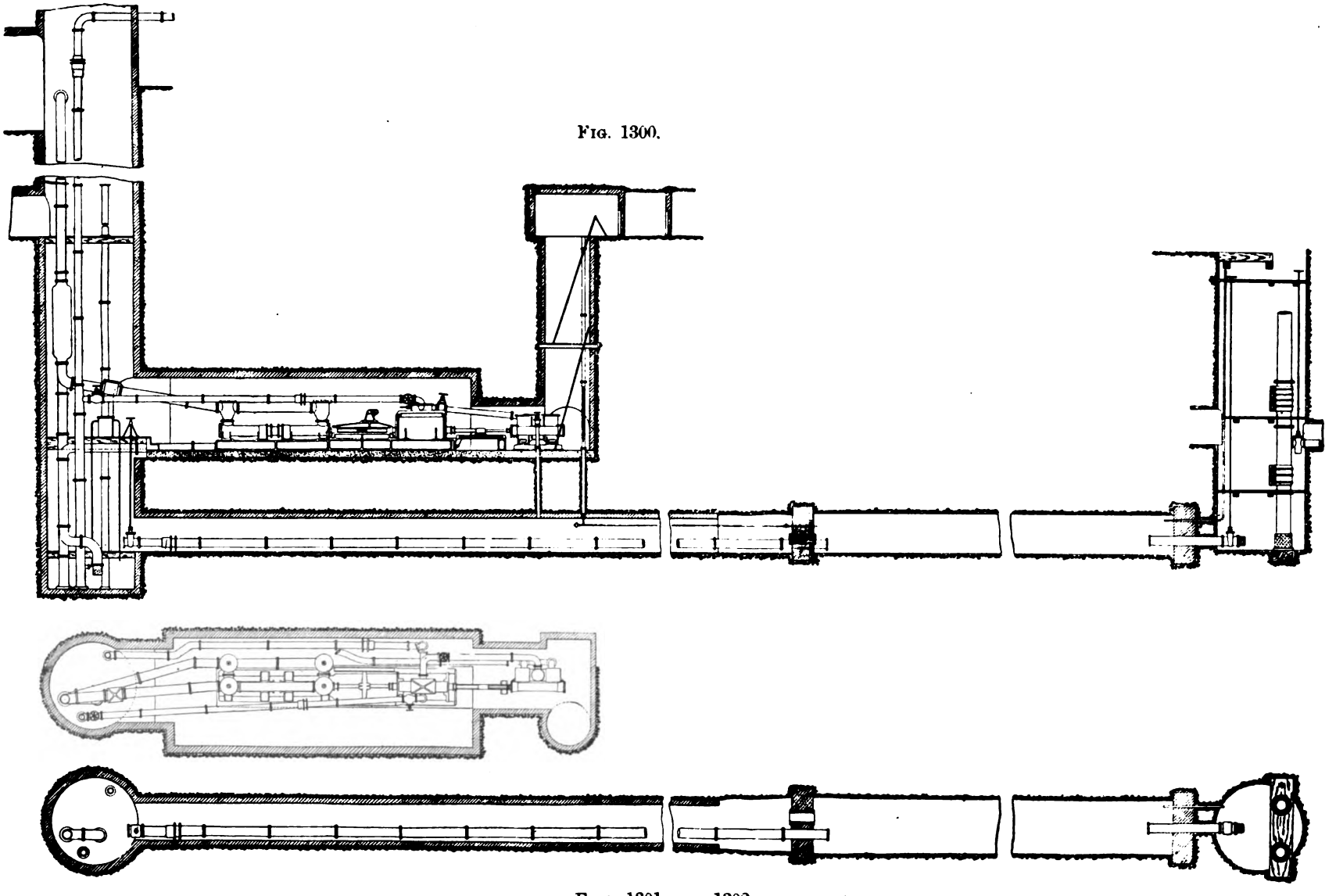

Fig. 1300.

Figs. 1301 and 1302.

Figs. 1300 to 1302.—Arrangement of Shafts, Drifts and Pumping Engines at Broomhill Colliery (*See* page 585).

LIBRARY OF THE UNIVERSITY OF

PLATE CXII.

FIG. 1306.

FIG. 1307.

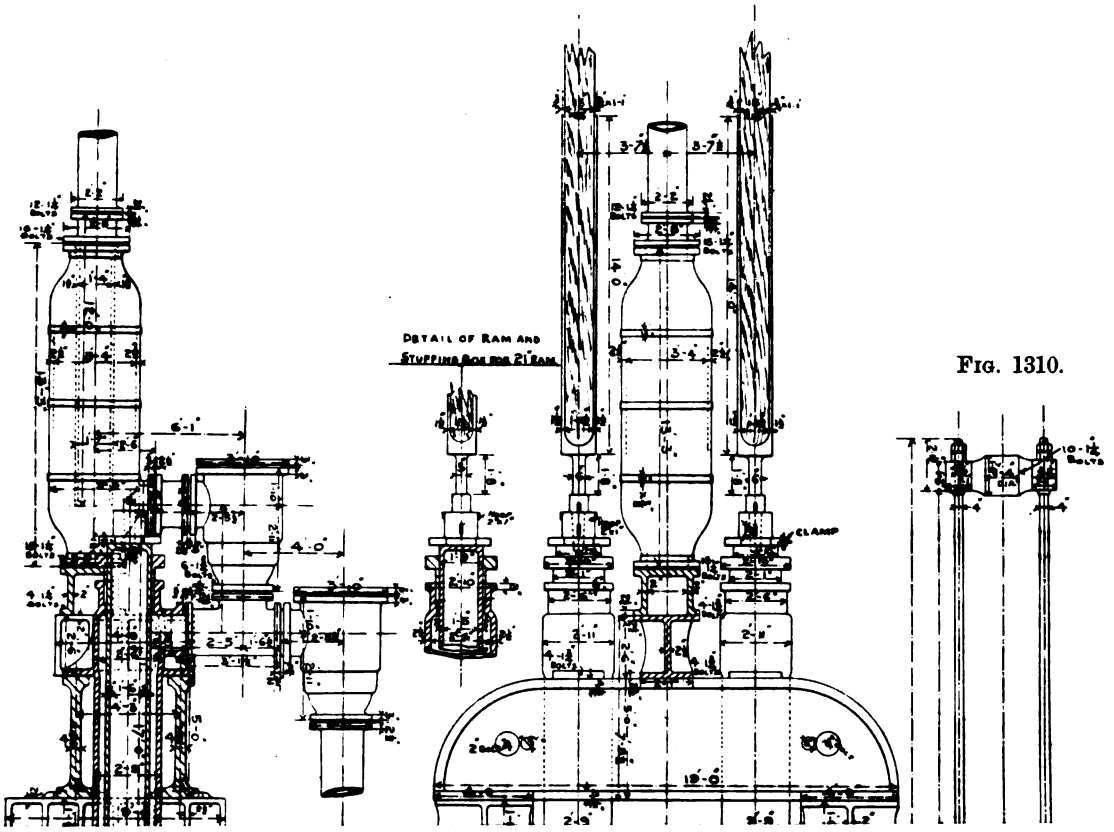

FIG. 1310.

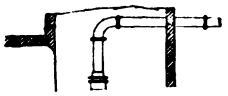

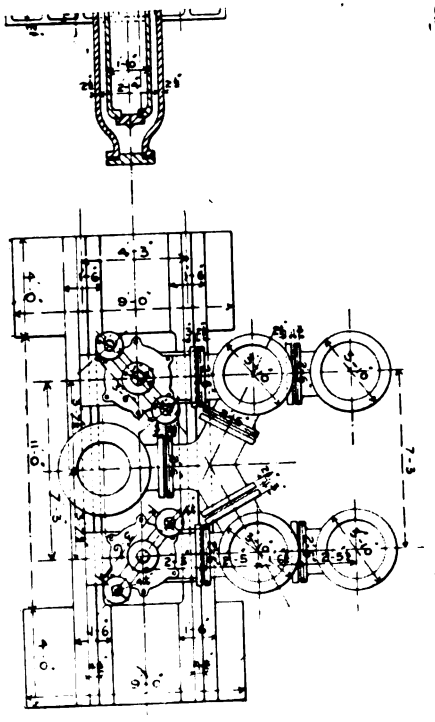

FIG. 1308.

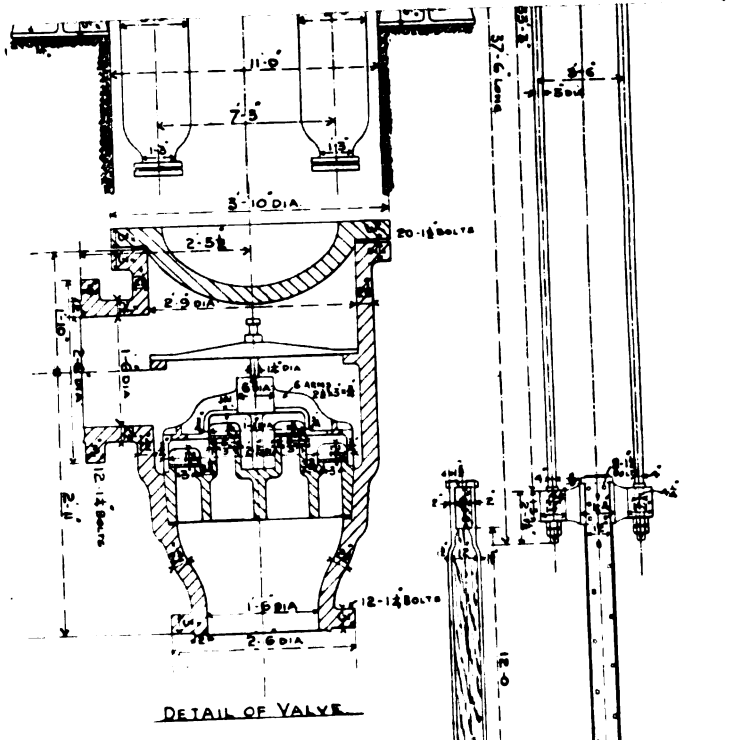

FIG. 1309.

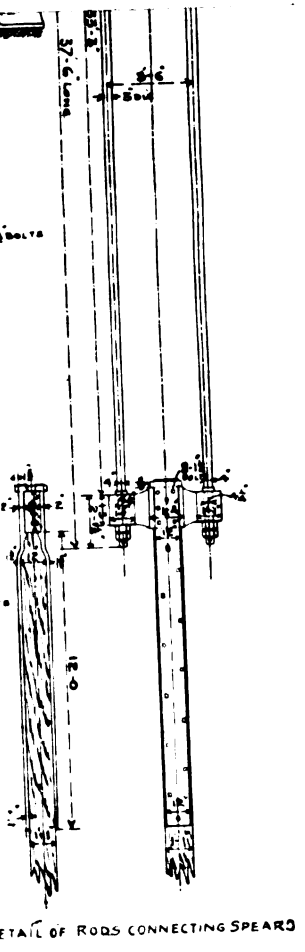

FIGS. 1306 TO 1310.—BARCLAY FORCING PUMP.

lasting qualities. They usually work in pairs, one on each side of the rising main, so that as one side is making the forcing stroke the other makes the suction stroke. With a bucket pump the water entering the barrel on the up-stroke of the bucket is partly forced during the descent of the bucket and spears, equal to the cubical contents of the bucket and portion of the spears descending, and the remainder on the return or lifting stroke. With a forcing engine on the other hand, the column comes to rest after each stroke; and to keep the flow as constant as possible, as well as for economy in construction, one rising main serves two pumps. Such an arrangement is shown in figs. 1303, 1304 and 1305, which represents a pair of forcing sets fixed midway in a shaft, by Messrs. Andrew Barclay, Sons and Co. Limited. The two barrels with the valve boxes between are cast together, and are supported on heavy cast iron girders, which rest upon oak buntons placed across the shaft. A breeches delivery pipe is placed over the two delivery valve openings, and above this is placed an inverted pipe-type air vessel. The rams are 14 in. in diameter, make a stroke of 6 ft., and are provided with a pair of clamps immediately above the stuffing-box gland, in order to catch the ram in its descent in case of the spears breaking. The rod of the Y end of the spear passes right through the ram and is secured by a nut and cotter on the underside. Another set of pumps is placed below these and is worked by side spears connected to the main spears by a cast iron distance piece, as shown. The valve consists of the ordinary leather-faced clack, as shown.

Another set of pumps by the same firm is shown in figs. 1306 to 1310. In this case the valves are separate from the ram barrels, which, however, are supported upon cast iron girders across the pit, as before. The connection, however, to the pumps below is made by means of wrought iron rods fixed to crossheads, the upper one being fixed to the top of the ram. These sets are worked by a horizontal compound condensing engine of the rotative geared type, the general arrangement being shown in figs. 1311 and 1312. The engine consists of a 24 in. and 42 in. cylinder by 4 ft. 6 in. stroke, the crank shaft being fitted with a spur pinion with twenty teeth 6 in. pitch and 18 in. wide, and a 16 ft. diameter flywheel weighing 13 tons. The air pump of the condenser is driven—contrary to the usual method, which is off the tail rod of the piston—by a drag crank connected to the main crank of the low-pressure engine by a link. The high-pressure cylinder is fitted with an expansion valve on the back of the main slide valve, and the pump is driven from the spur-wheel crank shaft by a connecting rod consisting of an iron-plated wood beam.

Geared pumping engines, however, are never so satisfactory as those which are direct acting, as when the pump nears the end of its stroke and the load goes off, the engine speed increases, and the load is taken again with more or less of a jerk

and noise owing to back-lash of the gear teeth. Further, no pause can take place on the pumps, and experience has shown that for all heavy pumps it is distinctly an advantage for the engine to pause for a few seconds to allow the valves to settle gently on to their seats.

Another forcing engine, by Messrs. Bever, Dorling and Co. Limited, is shown in figs. 1313, 1314, and 1315. This consists of a compound condensing engine, the condenser being placed horizontally behind the low-pressure cylinder, the tail rod of which works the air pump. It is also governed by a cataract cylinder, which is placed over the motion bars and controls the small valve over the high-pressure cylinder steam-moved valve, the movement of which it regulates. Details of the engine and quadrant foundations are shown in figs. 1316, 1317 and 1318, whilst the arrangement of valve chamber and seating for the rams is shown in figs. 1319 and 1320. The rising main is placed between the two rams, and is connected to the middle pipes B (fig. 1320) between the valve boxes A and at the same level with them. The suction pipe G is provided with a strum box, and is connected to the pipes E, on the top of which are placed twelve suction valves, which are divided into two sets of six each, those on the right through the pipes C, C, D, D supplying one pump and the six on the left through the pipes C, C, the other. The water, therefore, is drawn through the suction pipes and valves on E into C whence it passes through the pipes A into the barrel. Above the pipes A on each side of B are fixed six delivery valves connected to B, which forms part of the rising main.

The arrangement is similar to the one illustrated in figs. 1279 to 1281, and is designed to avoid trouble in regard to the lift and knocking of valves. When only one suction and one delivery valve has to pass all the water, the valve must have sufficient lift to allow the water to pass freely away without greatly increasing the velocity due to the speed of the ram. The amount of lift depends upon the area of the valve, and consequently, if the area is restricted, which is usually the case, the valve must have a proportionate lift, and if the lift is limited by means of stops, the water velocity must be increased, with a corresponding waste of energy. Another source of trouble is "gagging," and should a single valve become gagged then the whole weight of the column, in the case of the delivery valve, is thrown on the ram, or, in the case of the bottom clack in a bucket pump, the column is thrown upon the bucket, and both tend to assist the engine, with the result that the engine gains excessive speed, and, unless provided with some means to prevent it, would end in a serious breakage. Such an occurrence is termed a "riding column." By increasing the number of valves the lift of each valve can be reduced to a minimum, which not only reduces the chances of a valve becoming gagged, but reduces the velocity of the water and knocking of valves, with consequent smoothness and economy in working.

Fig. 1311.

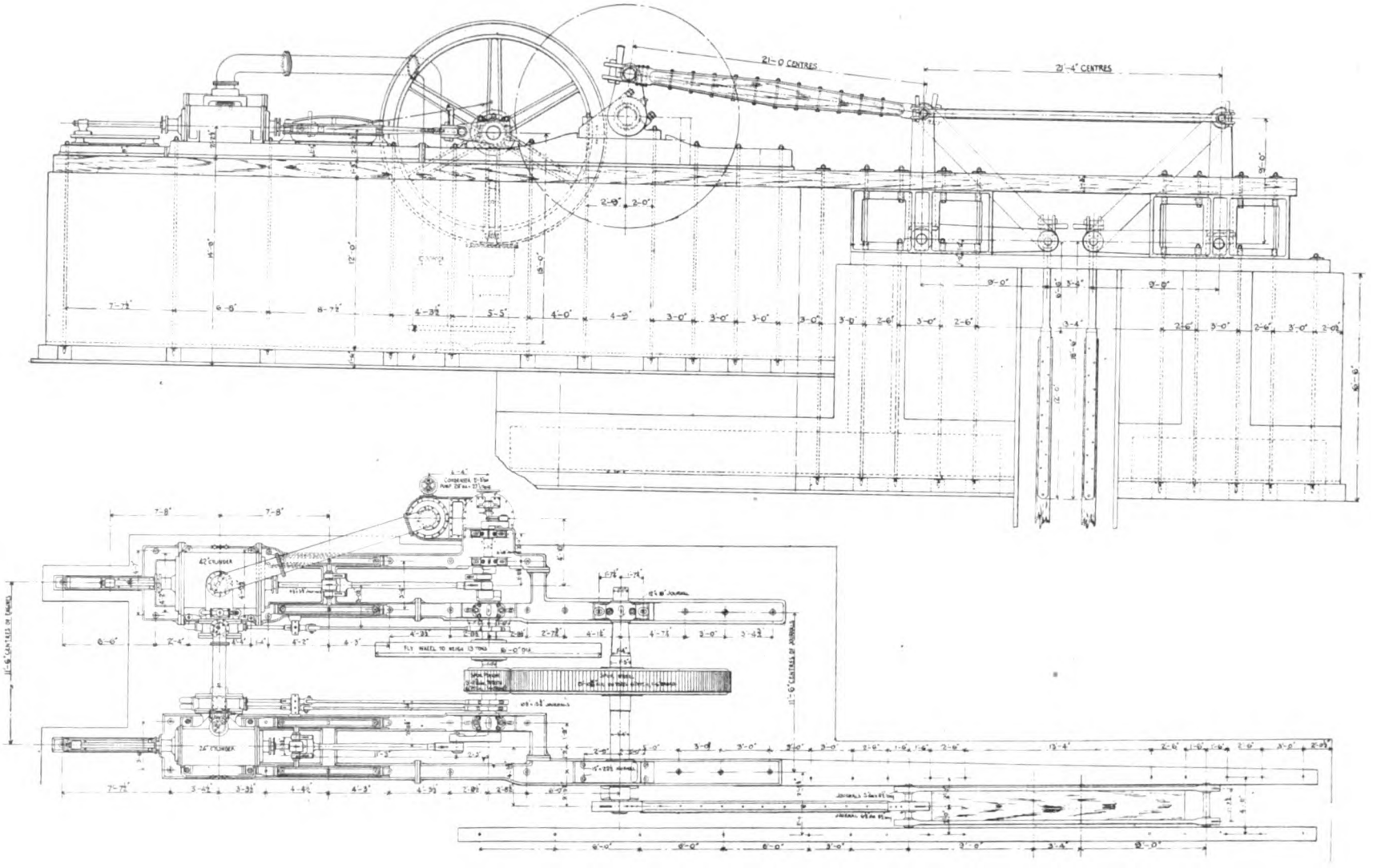

Fig. 1312.

Figs. 1311 and 1312.—Barclay Geared Pumping Engine.

FIG. 1313.

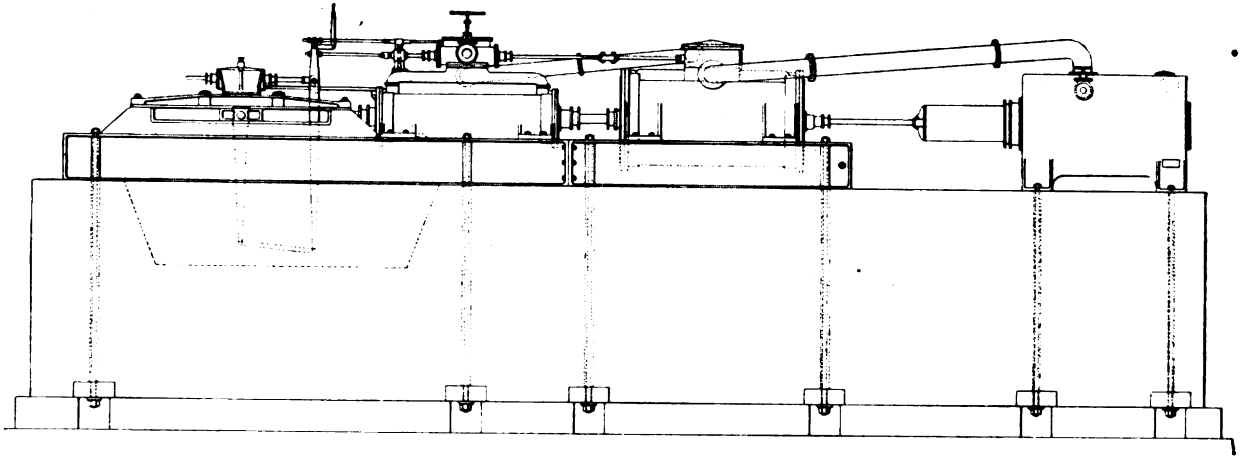

FIG. 1315.

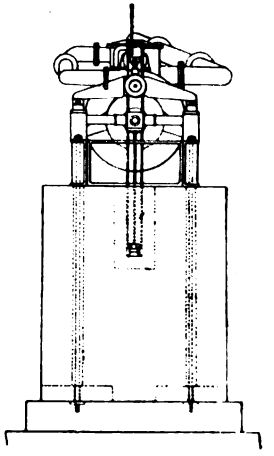

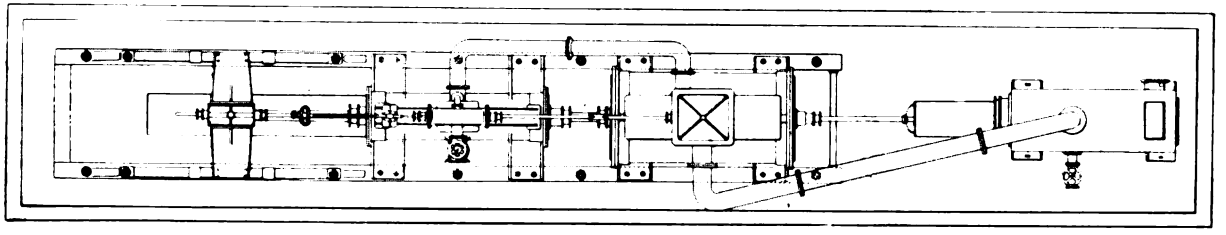

FIG. 1314.

FIGS. 1313 TO 1315.—PUMPING ENGINE BY BEVER, DORLING AND CO.

Fig. 1316. Fig. 1317.

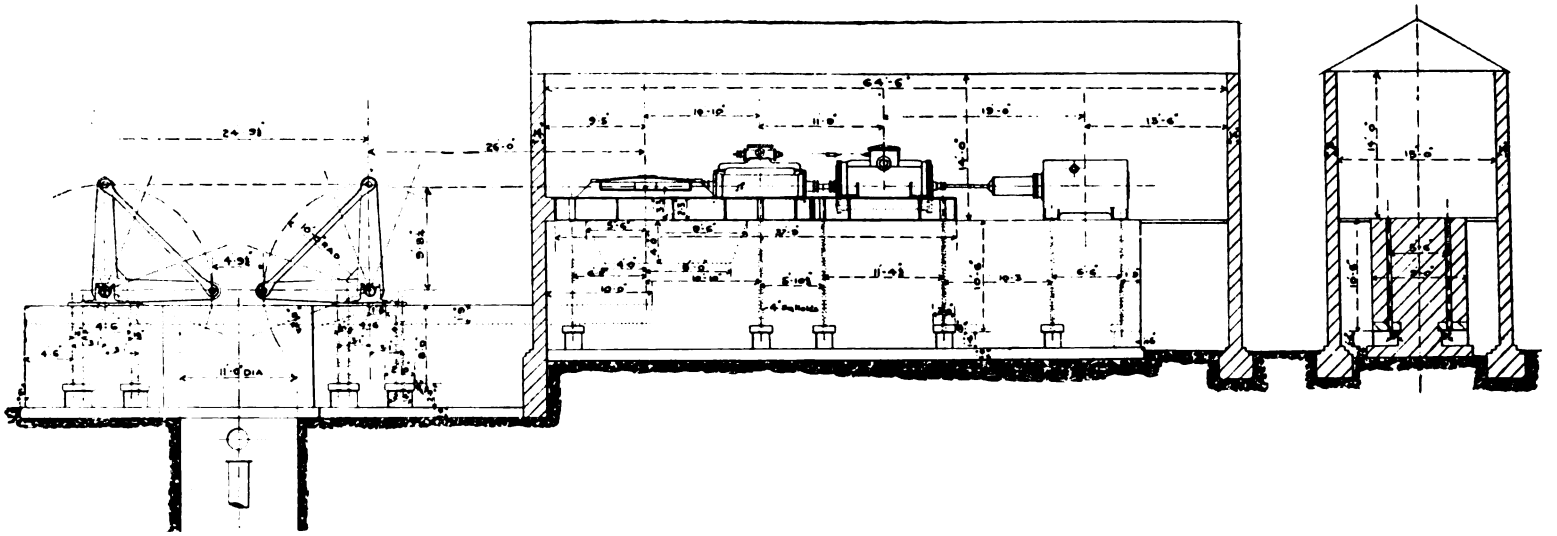

Figs. 1316 and 1317.—Arrangement of Engine and Quadrants—Elevation.

Fig. 1318.

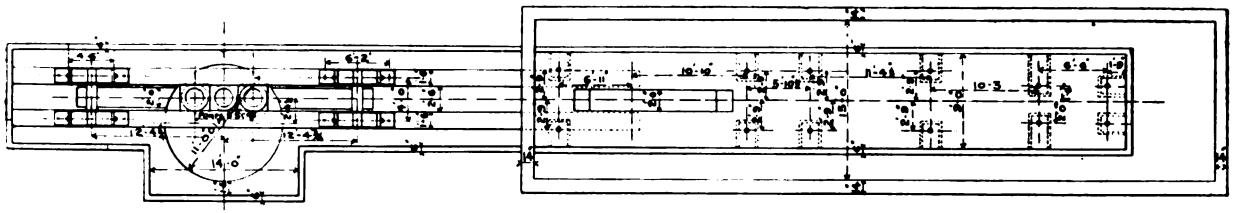

Fig. 1318.—Arrangement of Engine and Quadrants—Plan.

The valve used by Messrs. Hathorn, Davey and Co. is shown in fig. 1321, and, as will be seen, consists of a double-beat valve, with gutta-percha beats dovetailed into the valve, and the lift of the valve is regulated by means of a number of indiarubber rings upon the valve spindle, which also serve the purpose of a cushion. Figs. 1322 to 1325 show details of the plunger and valve seats.

The bucket and clack of the bucket pump are similarly constructed, as shown in figs. 1326, 1327 and 1328, which are details of the bucket sinking pump, 24 in. diameter, used at Mainsforth. Fig. 1327 also shows the method of attaching the ground spears for suspending the pump. The clack spindle is fitted with a mushroom head for fishing tackle, and, as will be seen, the clack piece is attached to the working barrel by means of hinged bolts, and the former is provided with two eye bolts for the attachment of lowering block, so that the clack box and pipes attached below it may be disconnected and lowered to enable the clack to be removed.

The bucket is fitted with a gutta-percha or leather jacket, secured by a hoop in a manner similar to the old type bucket, both being held in position by the bottom hoop and nut, which is further secured by a cotter. This jacket acts in the same manner as a cup leather, the pressure of the water forcing the ring against the side of the barrel, thus keeping the bucket tight. A priming pipe provided with a valve is also attached to the working barrel. This is used for charging the working barrel above the clack from the rising main, after examination or repairs to the latter.

With dry spear pumps, it is necessary to provide guides in the shaft in which they work, and "kep" or "knocking" beams which catch the spears in case of breakage. It is now usual also to provide buffers to limit the stroke of the quadrant (*see* fig. 1242), or beam, in case of a breakage. Wet spear pumps do not, of course, require guides, as the spears are inside the pipes, but it is usual to fix rounded cleats of elm wood to them to limit the "spring" or bending action.

The dimensions of spears depend upon the weight required to over-balance the water column, as it must be remembered that with a forcing set the water is forced upwards by the *weight of spears* which hang upon the quadrant pin, and the spears are not "pushed down" as may be supposed. The work done by the engine is in raising the spears ready for the next forcing stroke. They are made in lengths up to 50 ft., and should be of carefully selected pitch-pine, weighing about 30 lb. per cubic foot, and should be designed for a tensile stress of about 600 lb. per square inch. The joints are strapped together with forged iron or mild steel plates, the latter being now more generally used.

The old Cornish engine consisted of a single-cylinder beam engine, the beam overhanging the pit, and usually worked at a speed of five to six strokes per

PLATE CXIV.

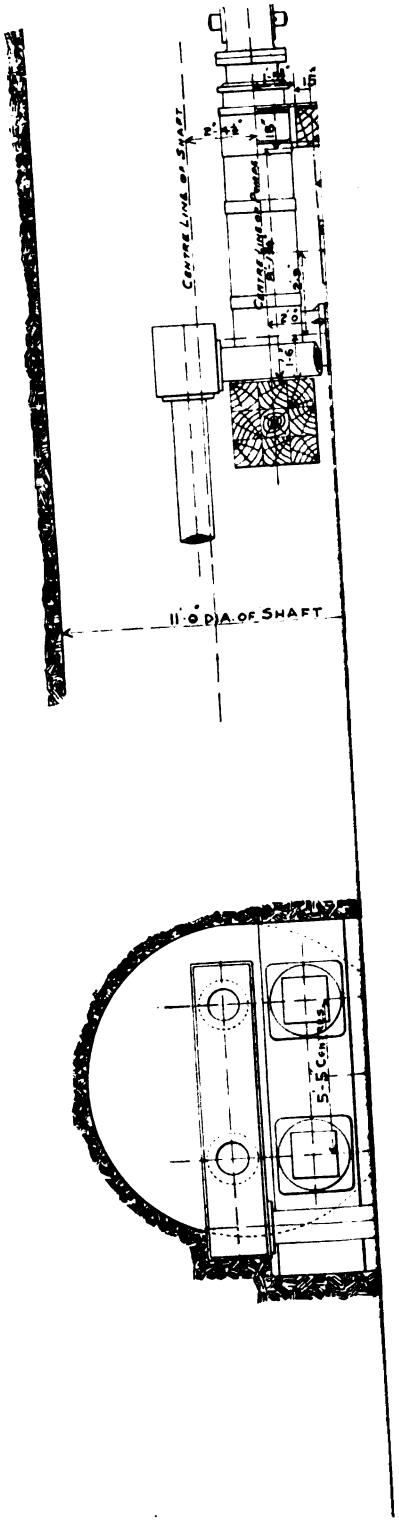

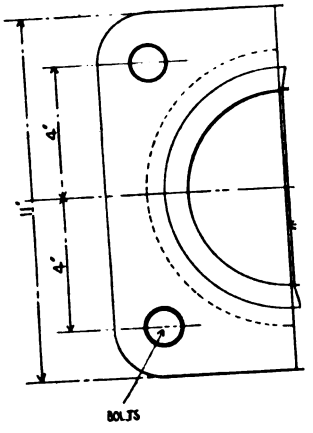

LIBRARY OF THE UNIVERSITY OF CALIFORNIA

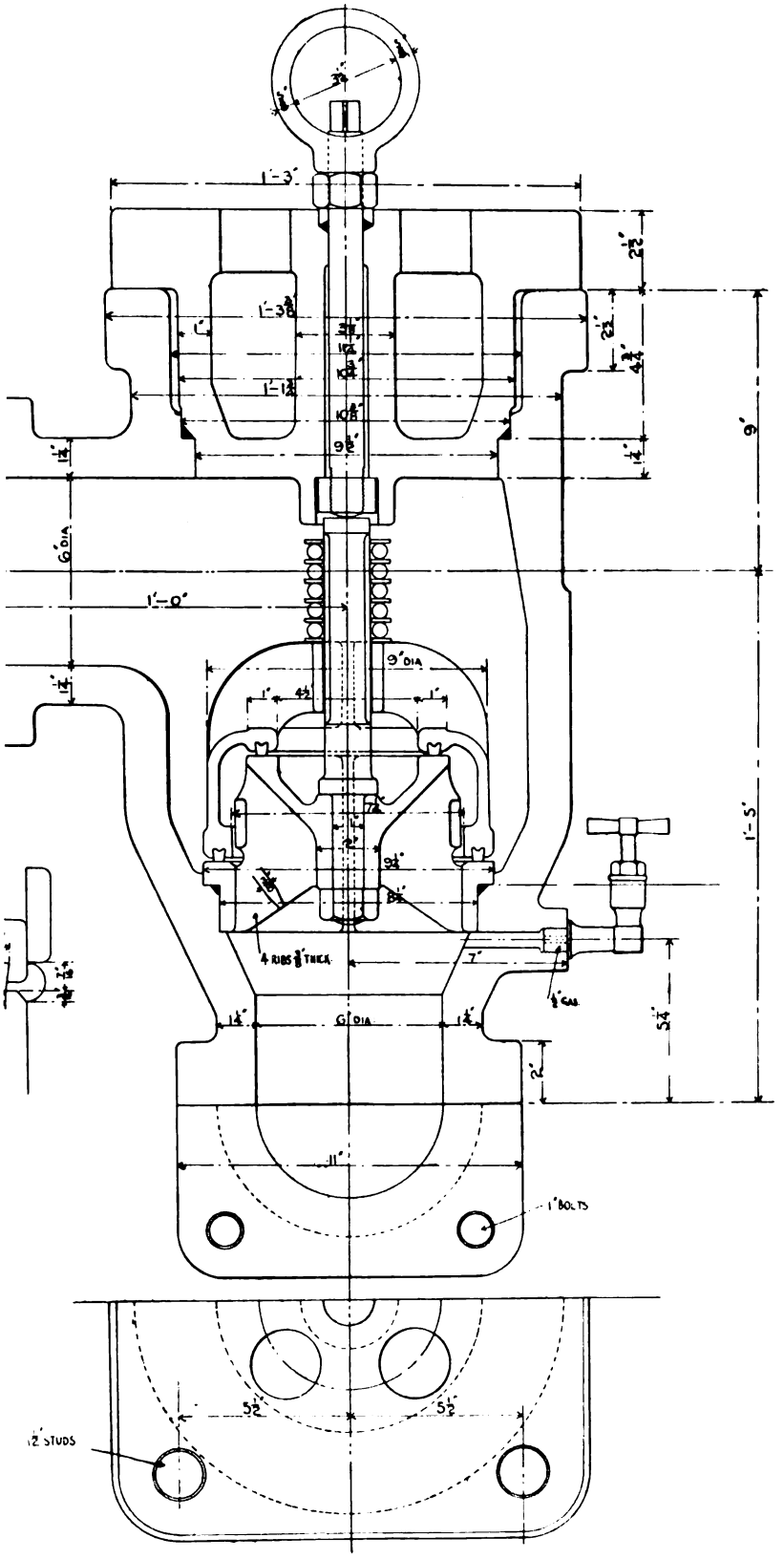

FIG. 1321.—HATHORN, DAVEY VALVE.

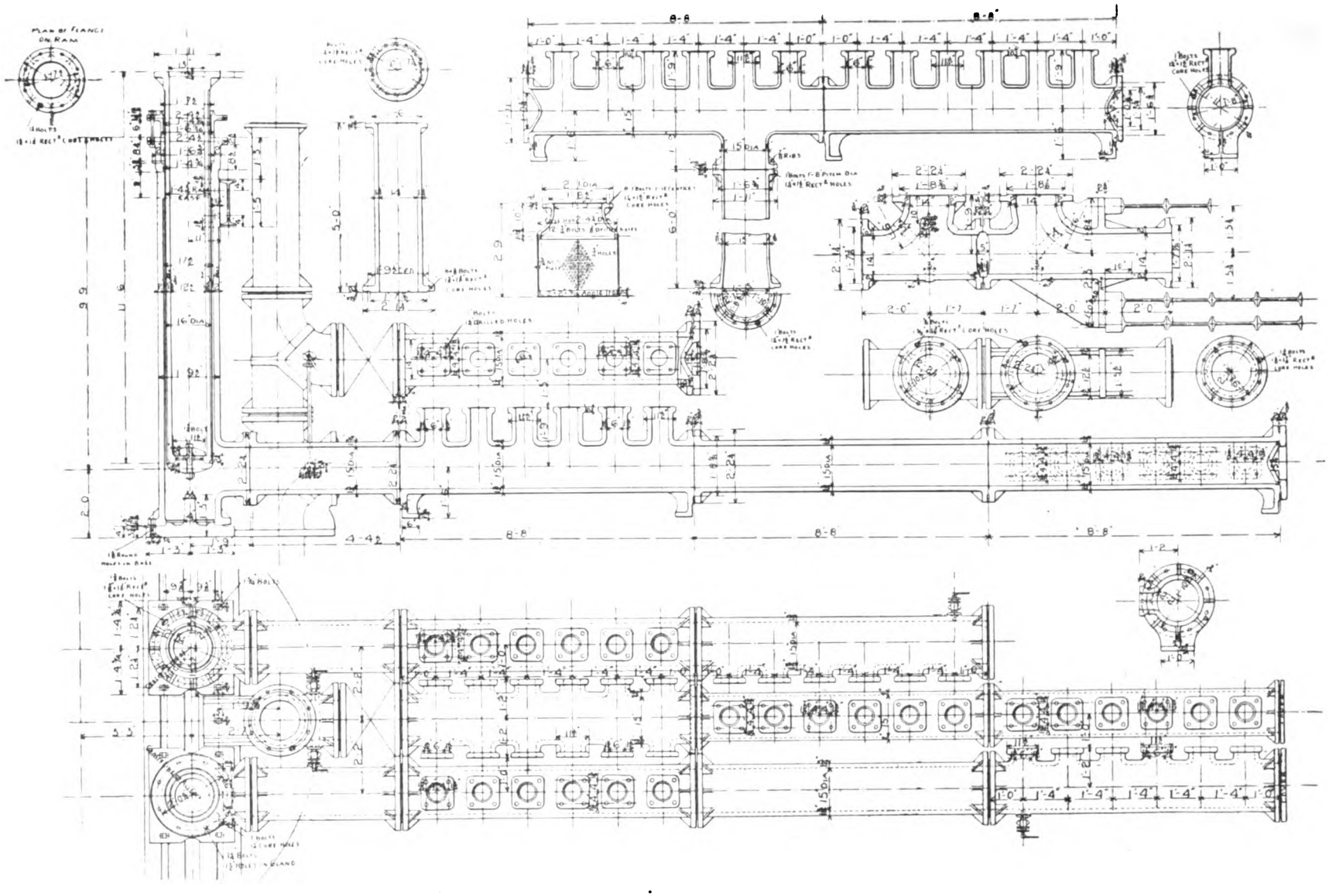

FIGS. 1322 TO 1325.—HATHORN DAVEY PUMP: DETAILS OF PLUNGERS AND VALVE SEATS.

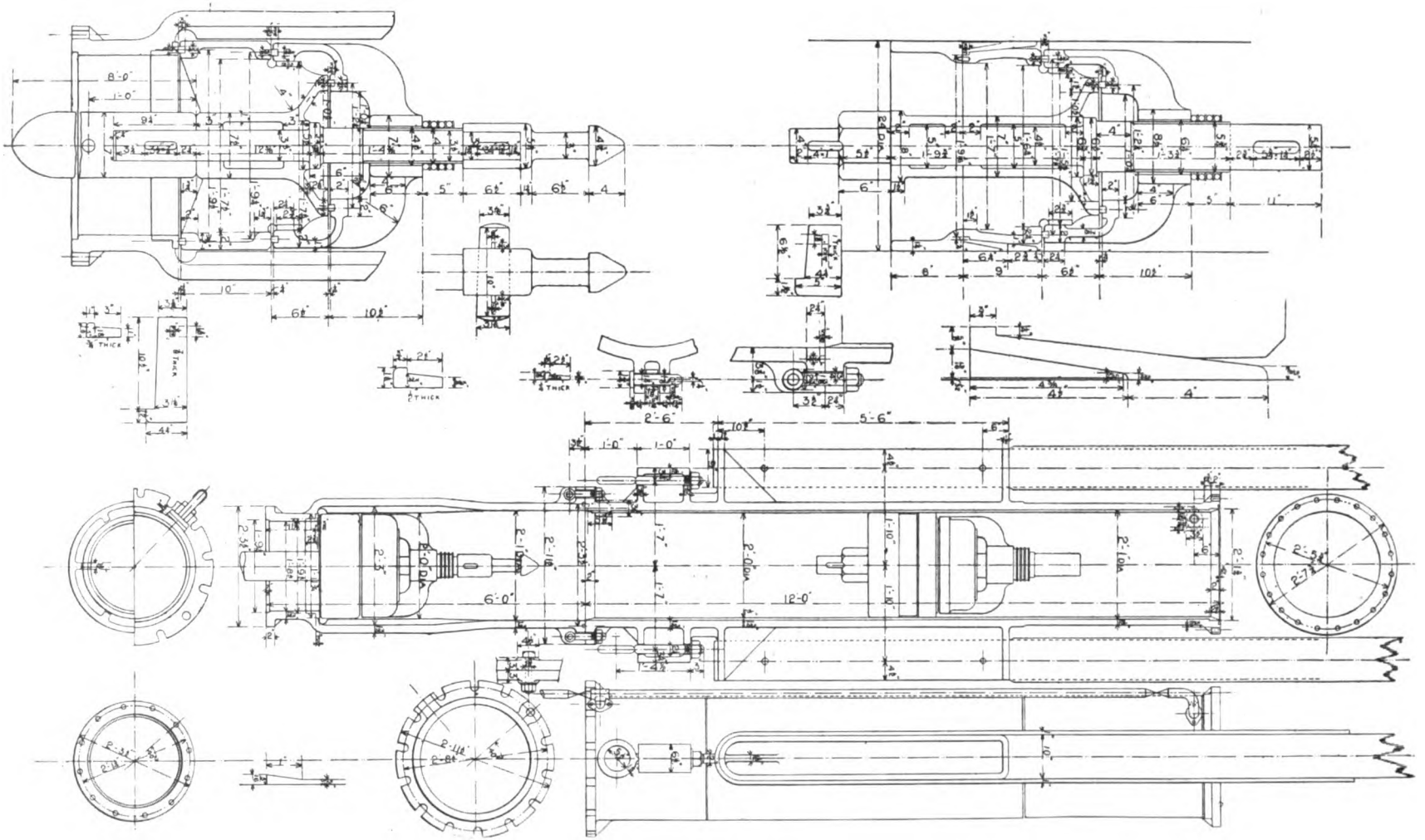

FIGS. 1326 TO 1328.—HATHORN DAVEY MAINSFORTH ENGINE: DETAILS OF BUCKET PUMP.

minute. It was in nearly every case fitted with a condenser, and was a single-acting engine—that is to say, the steam was admitted to the top side of the cylinder to raise the pump rods, and at the end of the stroke an equilibrium valve opened which admitted the steam to the other end of the cylinder, thus putting the piston in equilibrium, when the weight of the pump rods made the return stroke. At the end of each stroke a pause of from two to five seconds takes place, which is regulated by means of a cataract. Ordinarily this consists of a tank in which is placed a plunger pump fitted with a regulating plug or valve. The plunger is connected to a cross arm working on a fulcrum, one end of which is operated by the plug or valve rod of the engine, and at the other end is suspended a weight, while at some intermediate point between the fulcrum and the valve rod end is attached a connecting rod operating the trip gear of the valves. Thus as the piston descends, and with it the plug rod, the plunger is lifted, and the water from the tank follows it into the barrel through a small clack, and at the end of the stroke, the equilibrium valve cannot be opened until released by the trip gear, which can only come into operation when the plunger reaches the bottom of the barrel, the time occupied in its descent being regulated by the amount of opening in the plug or valve. Where a pause is required at the end of each stroke, two cataracts are employed.

With rotative engines, however, there is no pause, and furthermore the engine is limited in *slowness* of speed, as the speed must be such as will allow the flywheel to carry the cranks over the dead point. Attempts have been made, by providing small auxiliary engines, to carry the cranks and flywheel over this point, but without success, and consequently the valves cannot settle in their seats so smoothly as with a non-rotative engine with a pause. It is always advisable, therefore, with rotative engines to design the valve area so that the lift is reduced to a minimum.

With the Hathorn Davey engine, which is of the non-rotative type fitted with the differential valve gear, a pause takes place at the end of each stroke, and is further so arranged that the main valve or valves all close when any sudden movement of the piston takes place owing to a loss of the load due to a broken spear. The gear consists of a small subsidiary engine with two small steam cylinders, and two cataract cylinders provided with adjusting valves immediately above them, and is shown in fig. 1329. To the rod connecting the two pistons of the steam cylinder and its cataract, on the right is attached one end of the lever operating the main valves, while the other end of this lever is attached to some part of the engine, whereby it receives the same motion as the main pistons, but on a reduced scale. In the case of the Mainsforth engine this is obtained by means of the rocker and connecting rod to an arm fixed on the quadrant gudgeon

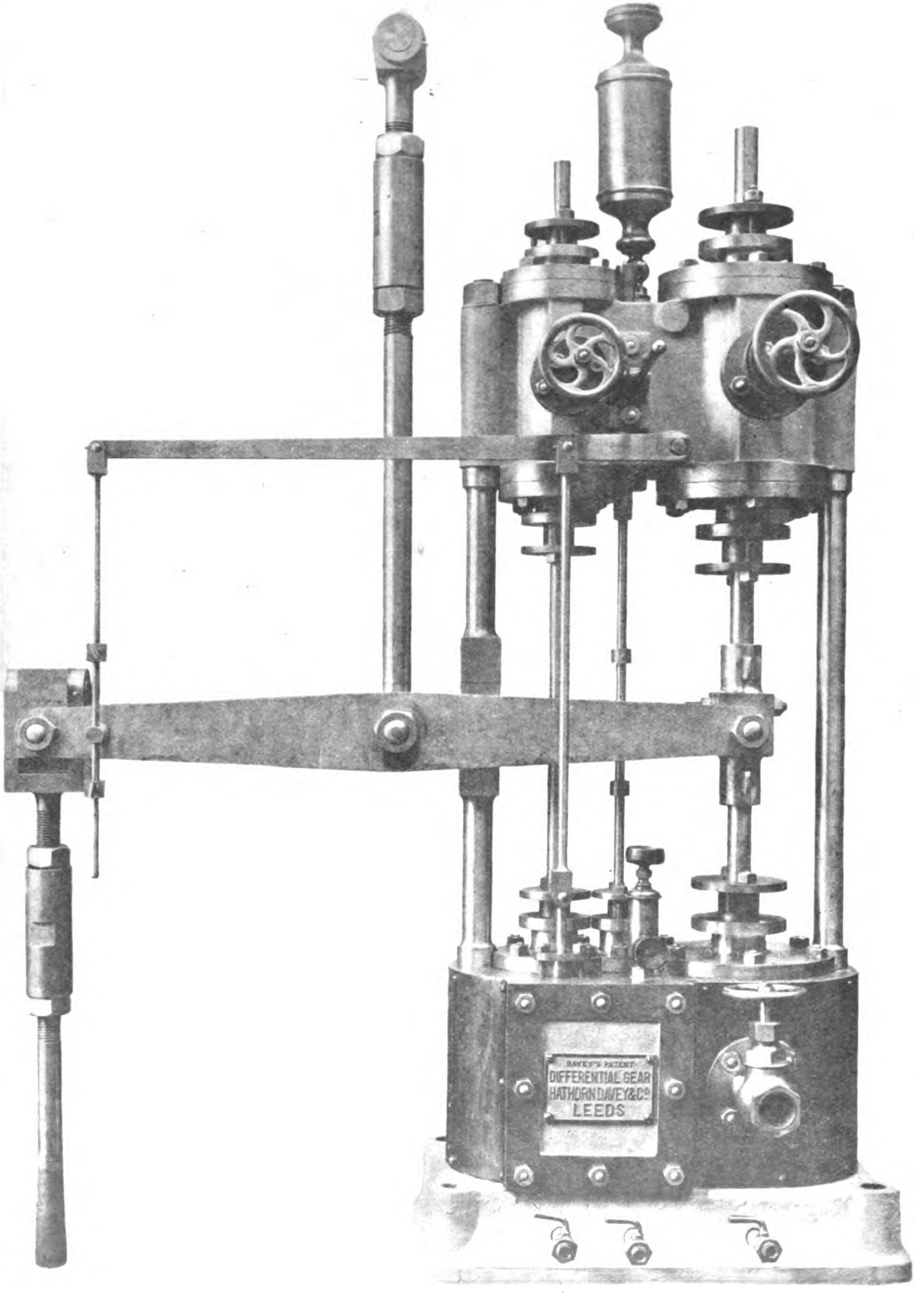

FIG. 1329.—HATHORN DAVEY DIFFERENTIAL GEAR.

(*see* figs. 1244 and 1245). The opposite ends of this lever move in different directions, so that if the two ends were to move at exactly the same ratio in point of speed relative to the position of the attachment of the valve rod, no motion of the latter would take place. The motion of the engine end of the lever is such as to tend to close the valve, and consequently should the engine suddenly lose its load so that the pistons move quickly forward, they carry the valve lever with them and so shut off steam, as the cataract end only moves with a certain fixed speed. The other small cylinder and cataract, which is operated by means of the tappet rod and lever worked by the main engine lever shown on the left, is for the purpose of determining the time of the pause, and by means of a tappet rod operates the steam valve of the other cataract steam cylinder, which through the lever opens the main valves of the engine. Supposing the engine to have completed a stroke, and closed the main valves, it must remain at rest until the small cataract moves sufficiently to open the valve of the cylinder operating the other cataract, when it commences to move and opens the valves of the engine, putting it in motion. Both ends of the lever now remain in motion until both the cataract engine and main engine reach the end of their strokes and remain at rest until the small engine reverses the operation. Hence both the speed of the engine and length of the pause is determined by the adjustment of these two cataracts.

The necessity for a short pause is evident when it is considered that a body of water weighing many tons is to be put in motion, and although the velocity may not be great, still a certain amount of time must be allowed for the stored momentum to be given out and the movement reversed. With a rotative engine the descending plunger meets the rising water, and reverses its motion before the foot valve has had time to close, with the result that it either comes to rest with a slight jerk, or the velocity of its descent is suddenly lowered, resulting in a shock to the clack and more or less excessive vibration on the spears. To prevent this, heavy cast iron weights are sometimes attached to the spears to keep them always *hanging* on the gudgeon of the quadrant, but without much improvement.

Where there is only one pump, or one set of spears working two or three lifts, it is necessary to adopt "balance bobs," as the weight of spears is usually much in excess of what is required to overcome the resistance of the column. With one lift the balance is attached to the surface quadrant, which is made ⊥-shaped, and the balance usually consists of either a heavy weight, or what is more usual, a box which may be loaded with old heavy metal for the purpose of making adjustments. Where more than one lift is in operation, a balance bob is sometimes fixed to the spears in the shaft, and consists of a beam working

FIG. 1330.

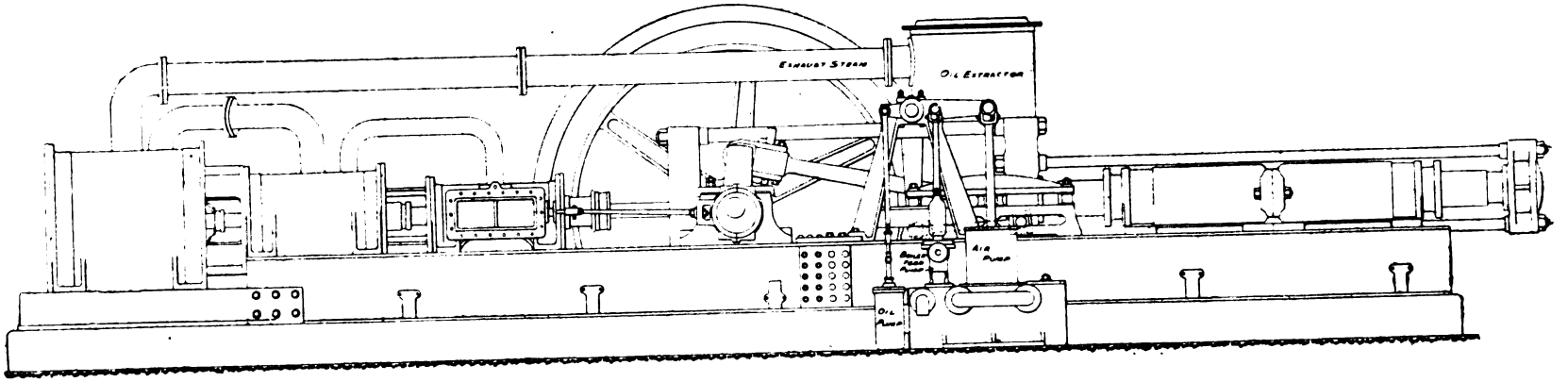

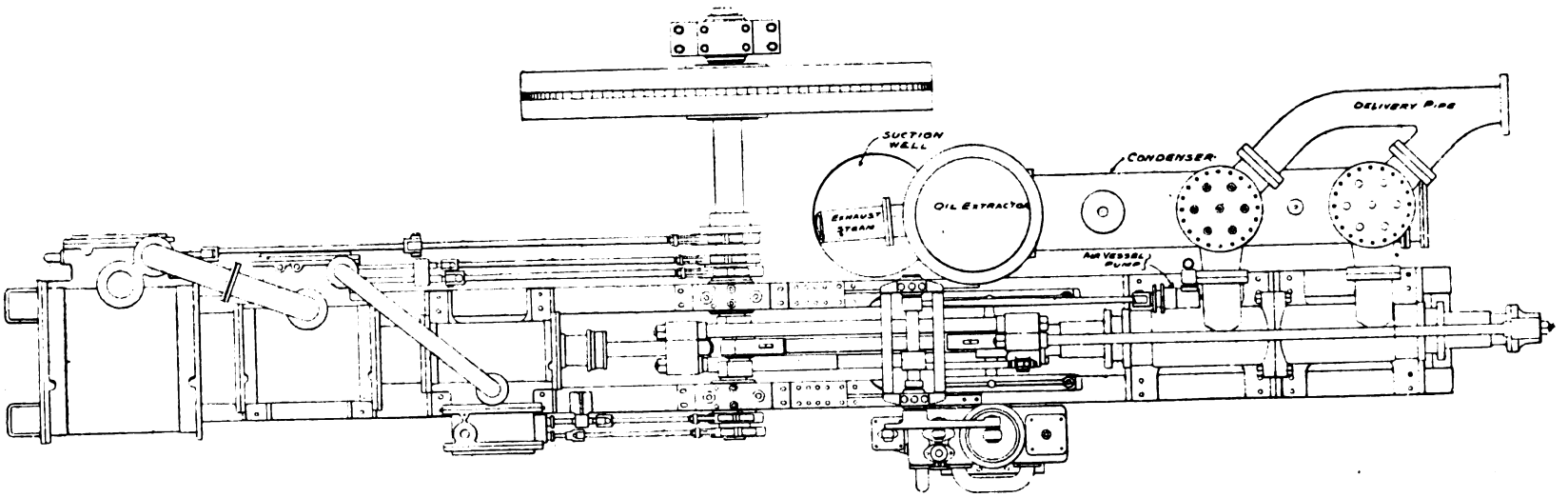

FIG. 1331.

FIGS. 1330 AND 1331.—DIRECT-ACTING ENGINE BY MESSRS WORTH, MACKENZIE, AND CO. LTD.

FIG. 1332.

FIG. 1333.

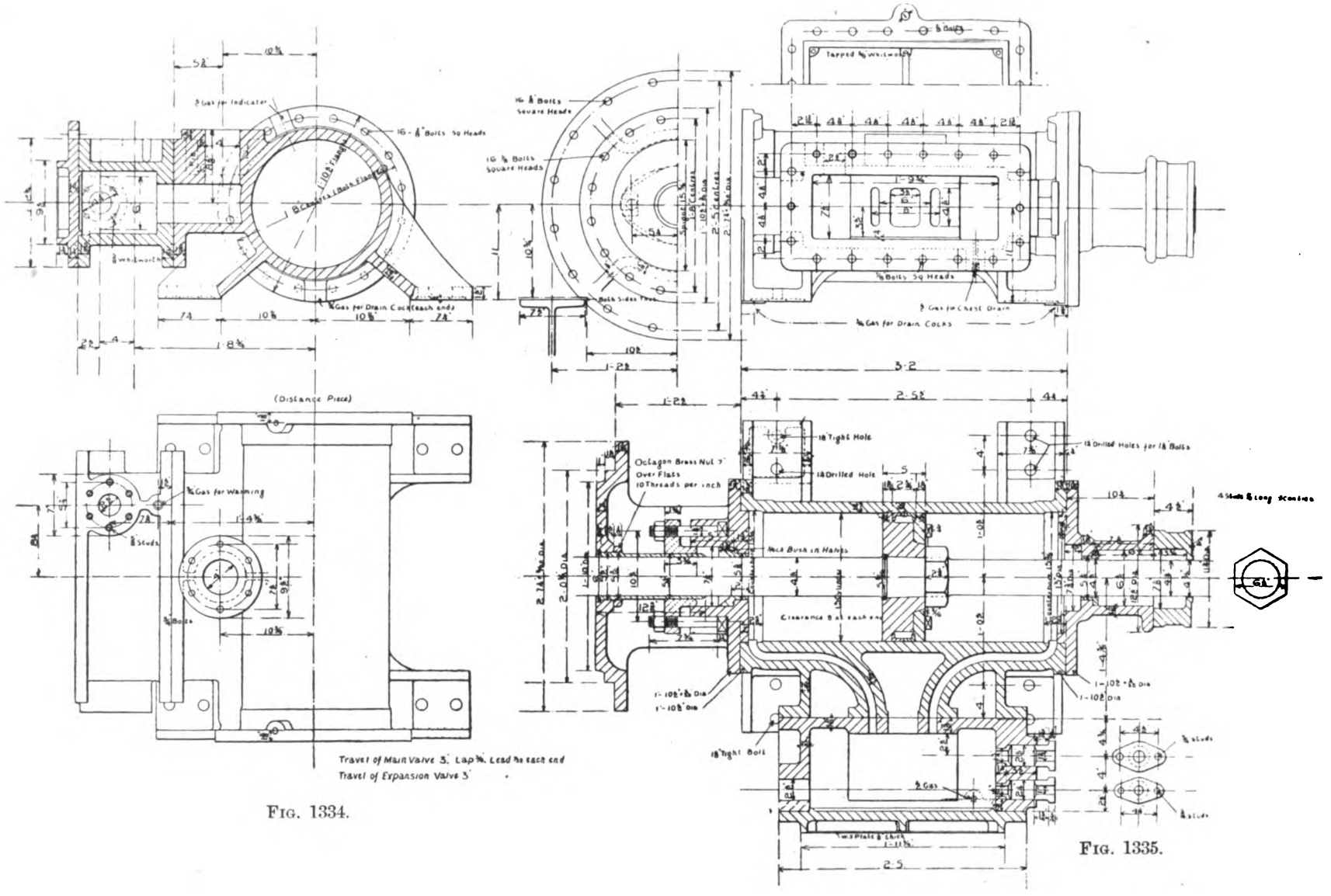

FIG. 1334.

FIG. 1335.

FIGS. 1332 TO 1335.—HIGH-PRESSURE CYLINDER, WORTH MACKENZIE ENGINE.

Fig. 1336.

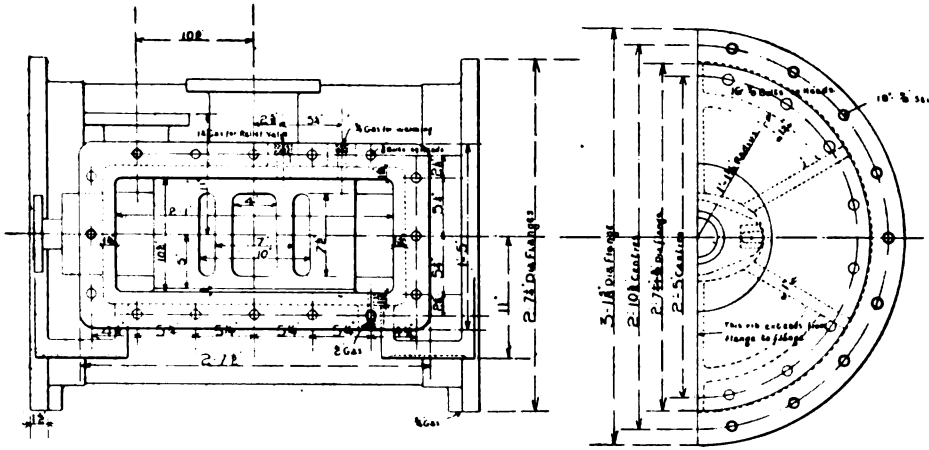

Fig. 1337.

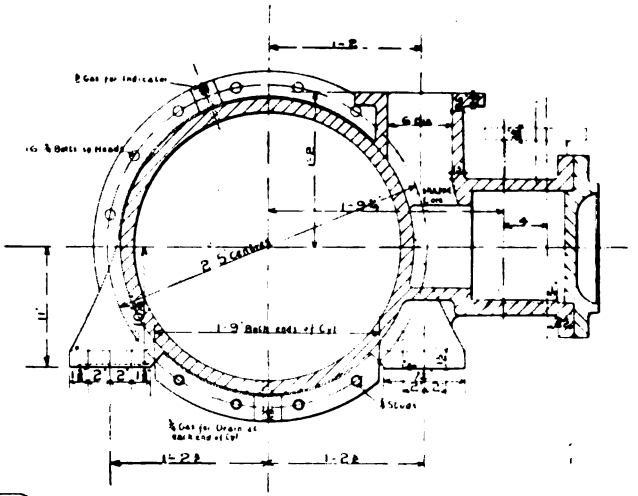

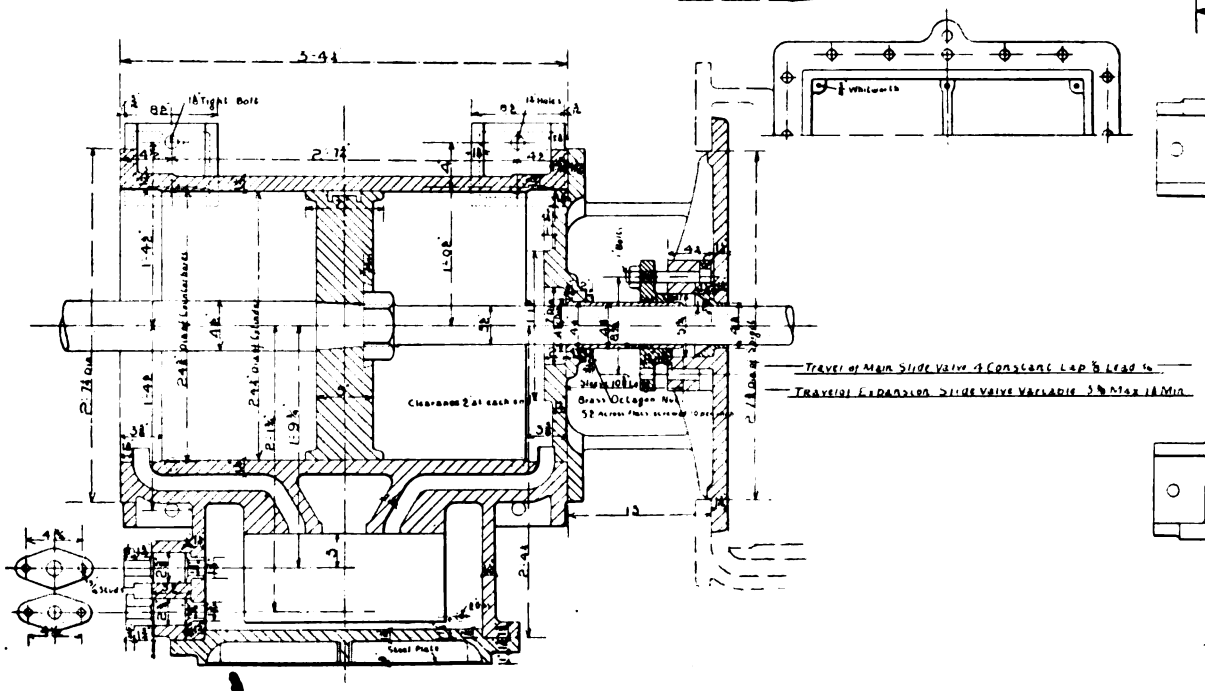

Fig. 1338.

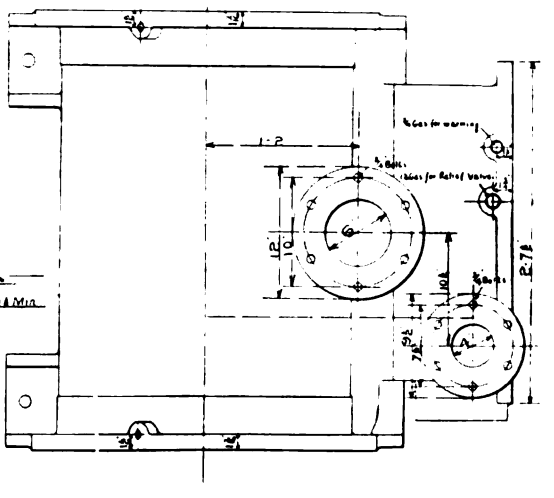

Fig. 1339.

Fig. 1336 to 1339.—Intermediate Cylinder, Worth Mackenzie Engine.

FIG. 1

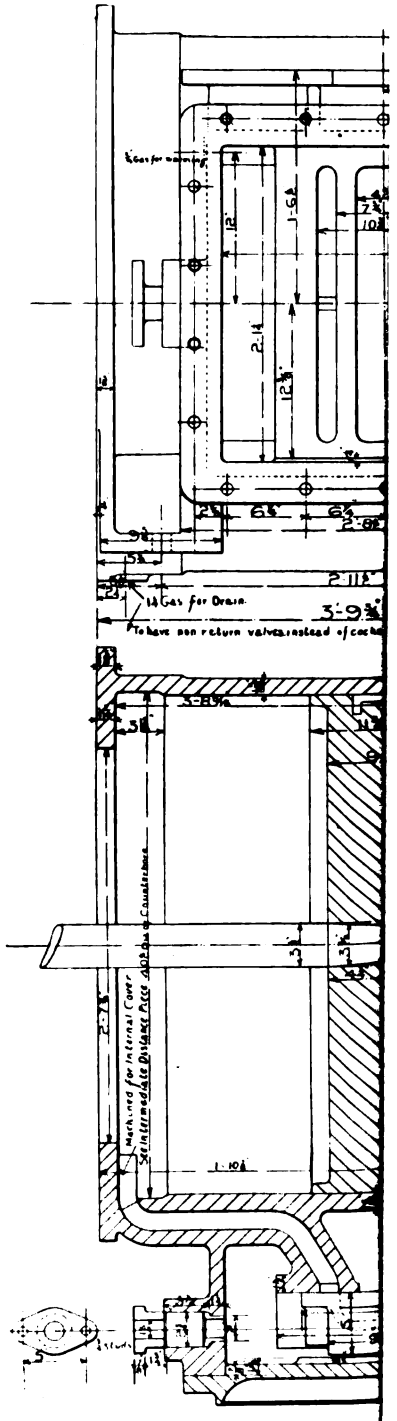
Gas for warming
1¼ Gas for Drain
To have non return valve instead of cock
Machined for Internal Cover
Set intermediate Distance Piece 2.0 Dia. & Countersunk

FIG.

PLATE CXVI.

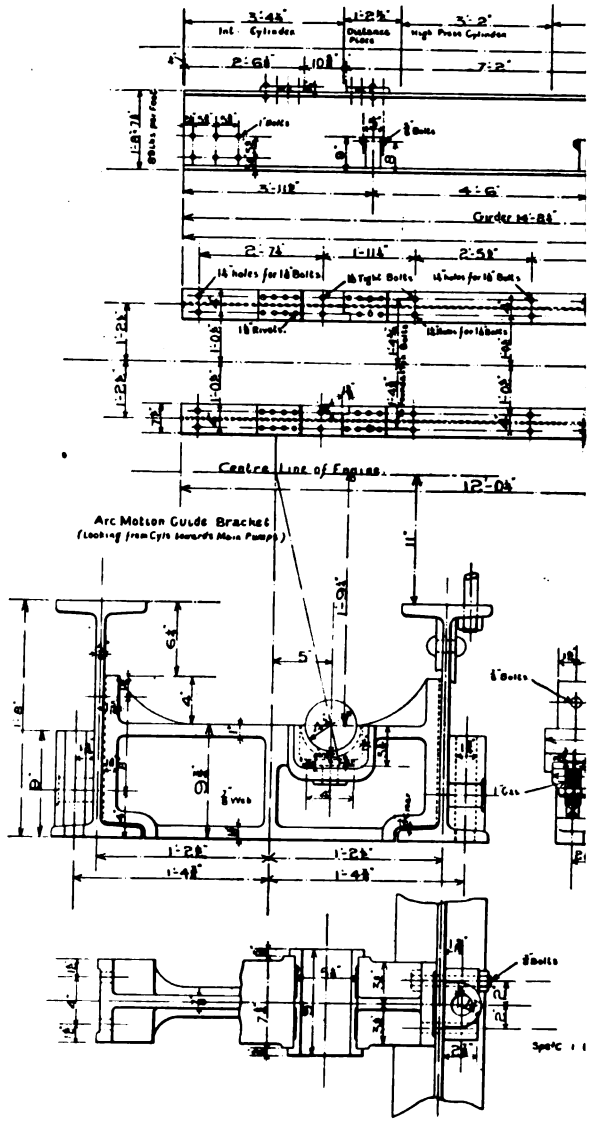

FIG. 1345.

FIGS. 1344 TO

FIG. 1344.

FIG. 1337.

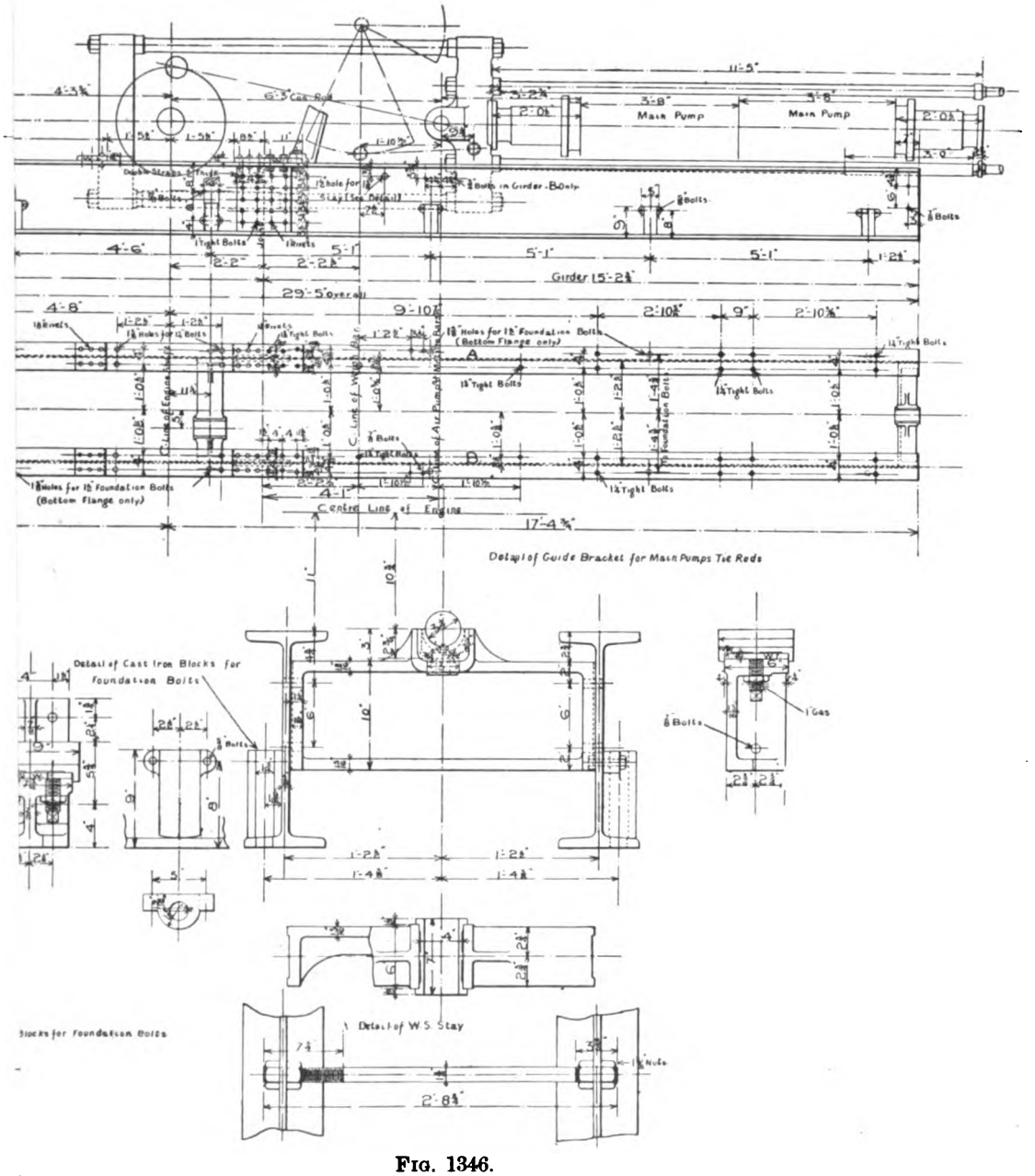

FIG. 1336.

FIG. 1346.

1346.—DETAIL OF BEDPLATE—WORTH MACKENZIE ENGINE.

LIBRARY OF THE UNIVERSITY OF CALIFORNIA

upon a gudgeon, with one end attached to the spears, whilst the other end is loaded, and works in an inset in the pit.

A particularly well-designed engine of the underground direct-acting, rotative type, by Messrs. Worth, Mackenzie and Co. Limited, who have also been kind enough to supply drawings of the parts, is shown in figs. 1330 and 1331. The engine is a triple-expansion condensing engine, with cylinders 15 in., 24¼ in., and 40 in. diameter by 2 ft. 6 in. stroke. The boiler pressure is 180 lb. per square inch, and the pump works against a head of 700 ft., the diameter of the rams being 10⅝ in. In order to get every possible economy in the consumption of fuel, the boiler is also placed underground in close proximity to the engine, and the steam superheated, the boiler being of the water-tube type, by Babcock and Wilcox, and the feed pump for the boiler is part of the main engine, but in case of accident an injector is also fitted to the boiler. The number of revolutions of the engine is twenty-eight, and the quantity of water delivered per minute is 600 gallons, against a head of 714 ft., which includes friction, with a coal consumption of 8 lb. per 1,000 gallons of water pumped.

As will be seen from the general arrangement, the engine is horizontal and drives the flywheel by means of a back-over connecting rod, which allows the rams to be directly connected to the piston rod. The cylinders are of strong close-grained cast iron, the high-pressure cylinder, as shown in figs. 1332 to 1335, being 15 in. diameter, and fitted with a cover at one end and a special cover and distance piece containing a stuffing box at the other. This distance piece also forms the front cover of the intermediate cylinder 24¼ in. diameter, which is shown in figs. 1336 to 1339, together with the distance piece between this and the low-pressure cylinder. The latter, which is shown in figs. 1340 to 1343, is 40 in. diameter, and the outer end is fitted with an ordinary cover, but the inner end is fitted with an internal cover, or the distance piece which contains the cover for the back end of the intermediate cylinder, and the front end of the low pressure can only be put into position *through* the low-pressure piston. This construction admits of the cover being taken off the back end of the intermediate cylinder without disturbing the cylinder.

The engine is mounted upon a strong steel girder bedplate, the main girders being 20 in. deep by 7½ in. broad, and tied together by cast iron distance pieces which also form guides for coupling rods and stay bolts. Details, showing the construction of the bedplate, are shown in figs. 1344, 1345 and 1346. The main pumps, details of the barrel and valves of which are shown in figs. 1347, 1348 and 1349, are placed end to end, the back-end pump being driven by tie rods from the main crosshead, to which the front ram is bolted, and also has attached to it the connecting rod, shown in figs. 1350 and 1351, for the flywheel crank shaft

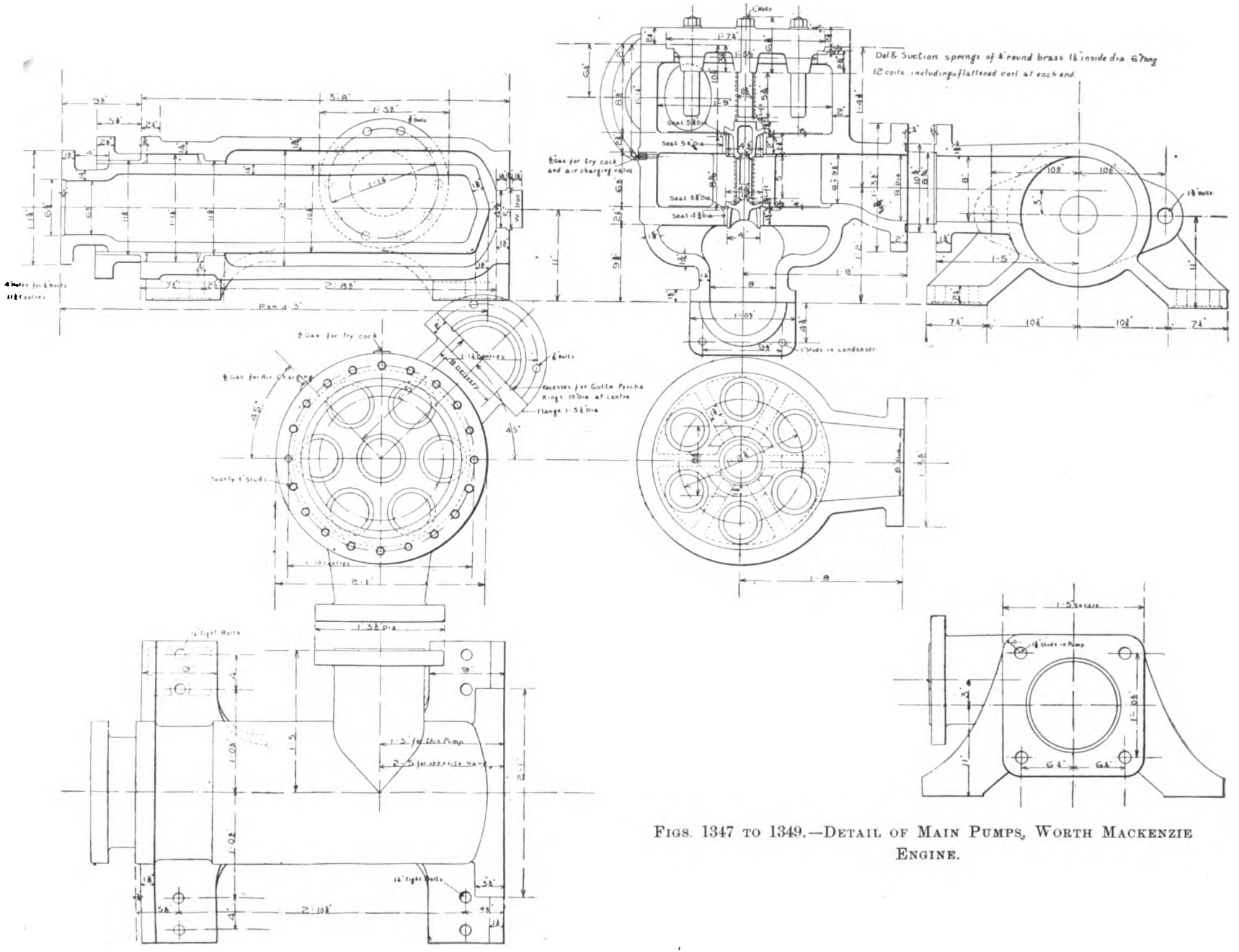

FIGS. 1347 TO 1349.—DETAIL OF MAIN PUMPS, WORTH MACKENZIE ENGINE.

This crosshead is connected to the piston crosshead by two main tie bars set in an oblique direction.

The pump valves are contained in a separate valve box, and consist of seven 4 in. diameter valves, as shown in fig. 1348, which are interchangeable. The water is drawn from a staple and forced direct to bank through an air vessel placed near the engine, which has a constant supply of air forced into it by a special charging pump on the main engine. This air vessel is vertical, and built up of $\frac{1}{2}$ in. steel boiler plate with dished ends, that at the bottom being inverted, as will be seen from figs. 1352 and 1353, which show the detail of the air vessel. The air-charging pump —fig. 1354—merely consists of a small ram, single-acting, working in a barrel with

FIG. 1350.

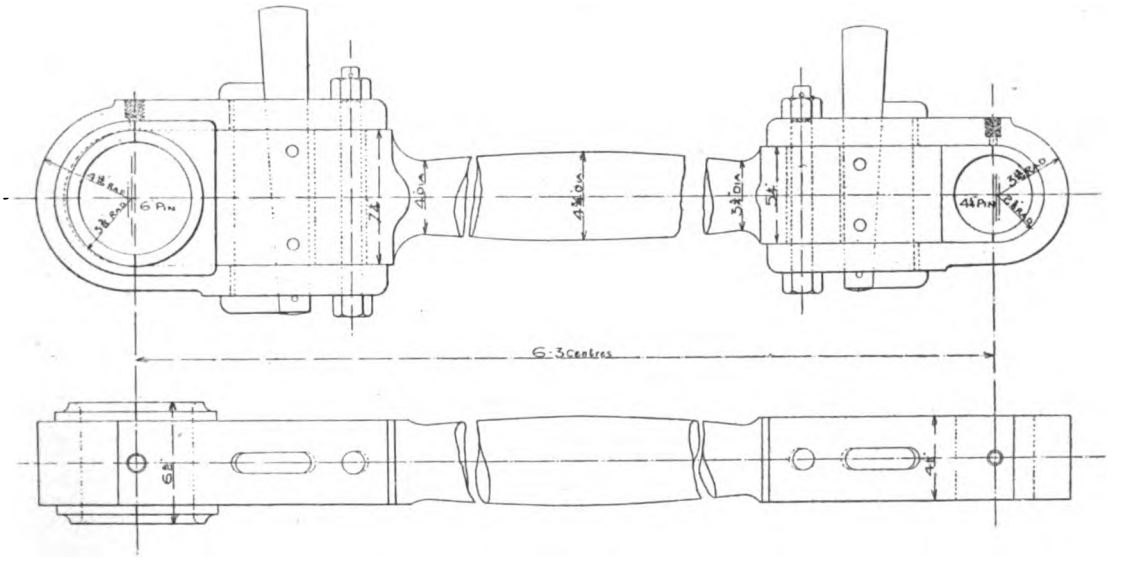

FIG. 1351.

FIGS. 1350 AND 1351.—CONNECTING ROD, WORTH MACKENZIE ENGINE.

an open chamber, at the top of which is fixed the air "snifting" or intake valve and delivery valve. This chamber is partly filled with water, and on the return stroke air is drawn in which occupies the vacant space, and is forced into the air vessel on the return stroke. The air-vessel is to ensure a steady flow of the water from the main pump and freedom from shock.

Figs. 1355 and 1356 show the surface condenser, which consists of a plain cylindrical vessel filled with sixty Muntz metal tubes $1\frac{1}{4}$ in. diameter by about 9 ft. long. Unlike most surface condensers where the cooling water passes through the

FIG. 1352.

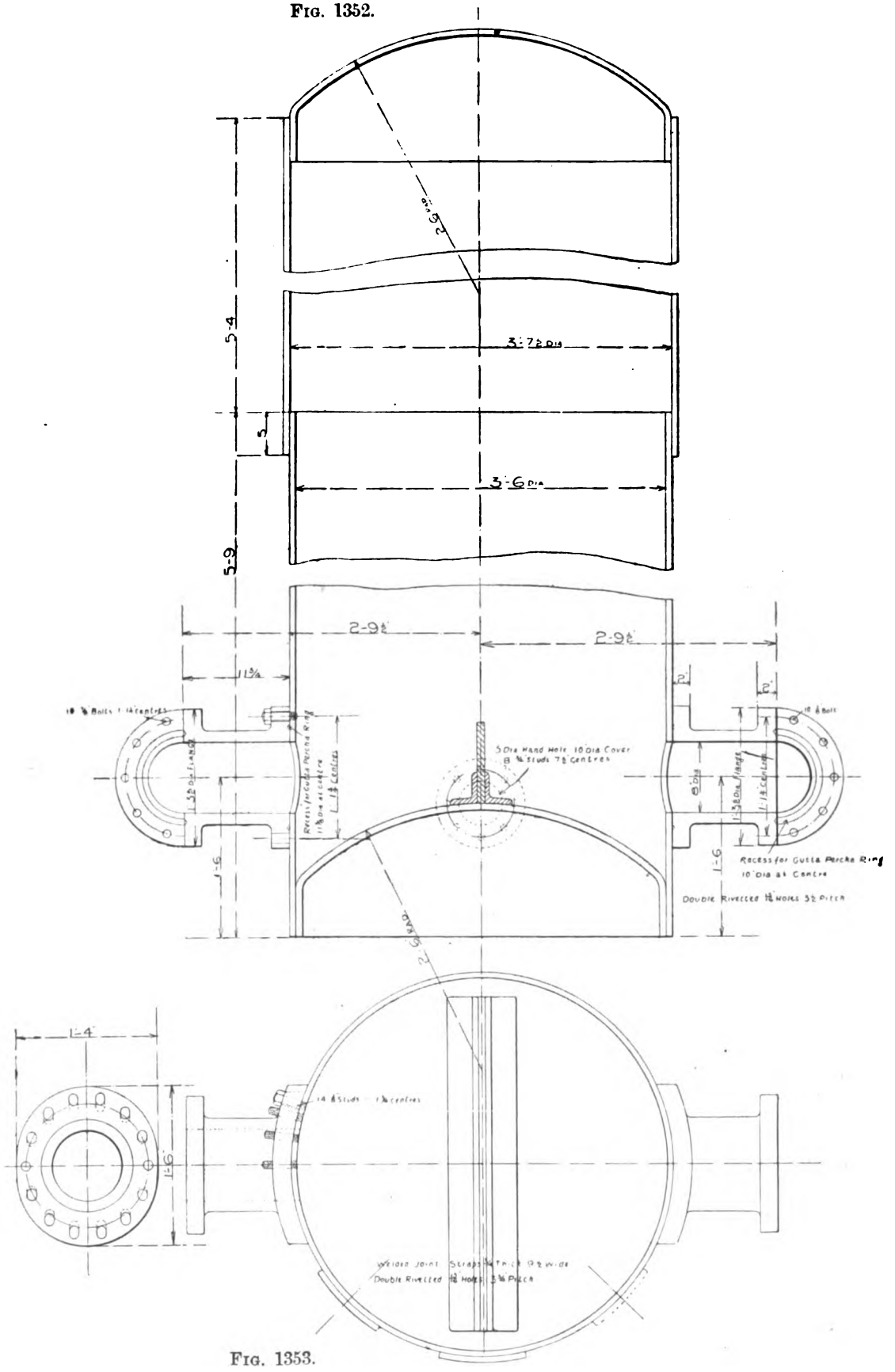

FIG. 1353.

FIGS. 1352 AND 1353.—AIR VESSEL, WORTH MACKENZIE ENGINE.

tubes, in this case the exhaust steam enters at the left-hand end, passes through the tubes to the outlet on the right which is connected to the air pump. The water enters at the bottom, and after passing around the tubes is delivered at the top right-hand outlet.

The condensed water and air is drawn from the condenser by the air-pump shown in figs. 1357 and 1358. This consists of a box divided into two compartments

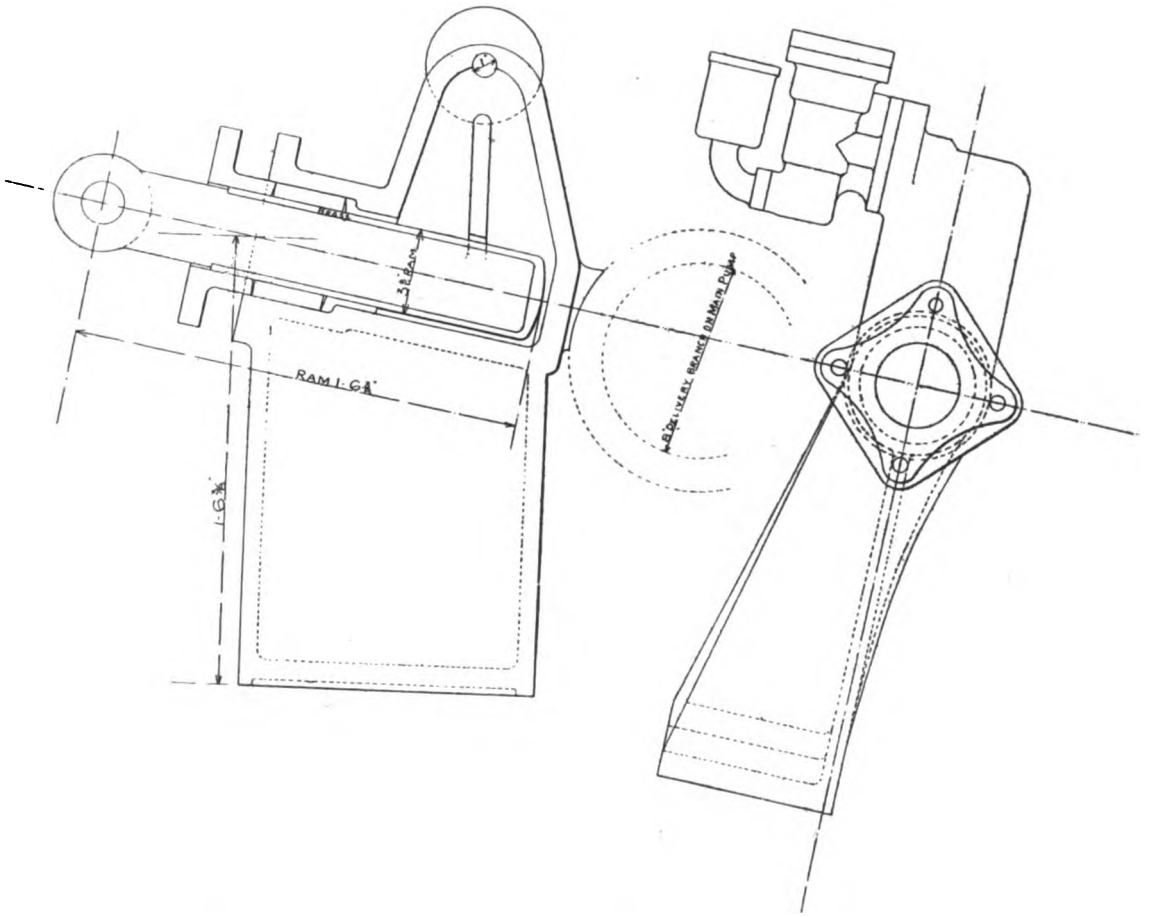

FIG. 1354.—AIR-CHARGING PUMP, WORTH MACKENZIE ENGINE.

containing the foot and delivery valves on one side, with the air pump bucket in the centre, while the other compartment forms a hot well for the boiler feed pump, which is fixed on the top. The two compartments are connected together by a pipe as shown. This box is contained in a larger tank, into which the water from

the boiler feed well overflows through the overflow bend, and to the side of the box is bolted an oil pump, which pumps out all the oil floating on the surface of the water. The boiler feed pump is shown in fig. 1359, and the oil pump in fig. 1360. In the former the valve guide wings are set diagonally so that the water gives a partial turn to them every time they are lifted. The oil pump consists of a cylindrical casting with openings for the inlet of the oil and water below the top or delivery valve and an outlet above this valve. Inside this is fitted a liner with a row of holes about midway in its length bored in its circumference, and in which works an inverted cup-shaped piston. A valve is fitted to the top of

FIG. 1355.

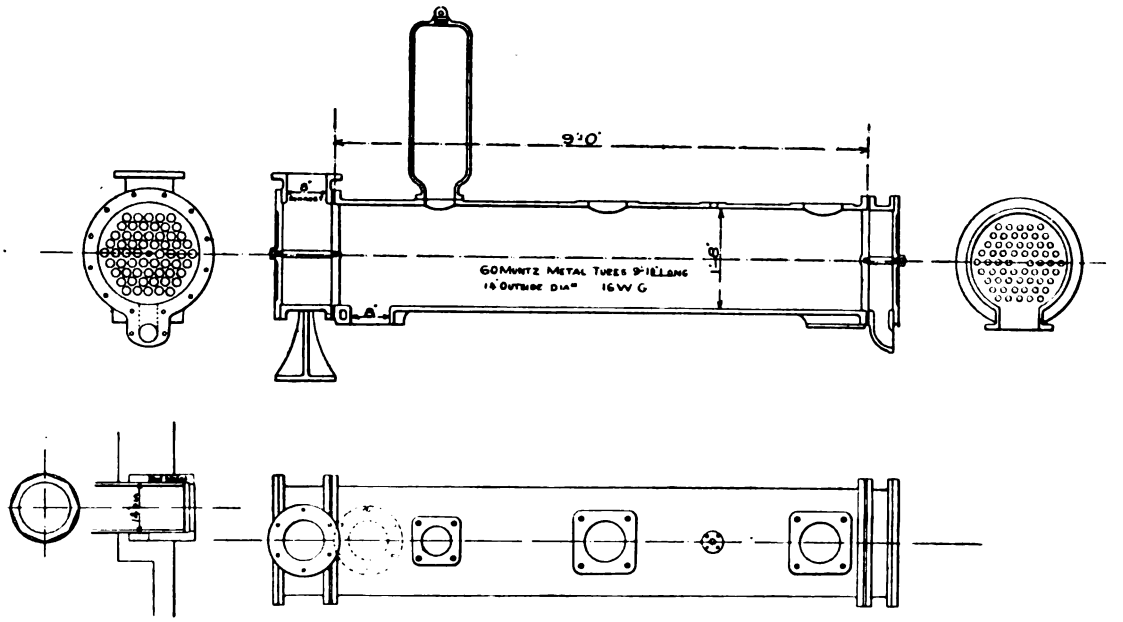

FIG. 1356.

FIG. 1355 AND 1356.—SURFACE CONDENSER, WORTH MACKENZIE ENGINE (*see* page 609).

the liner, which is pressed to its seat by a spring, and has a long body shaped to fit the interior of the piston. It will be noticed that no foot valve is necessary. As the piston descends it uncovers the holes in the liner, and thus allows the oil and water to enter, but on ascending it closes the holes and prevents the oil and water contained in the piston from escaping, which is consequently forced through the delivery valve. The oil and water are delivered to a filter from which all water and dirt are extracted, leaving the clean oil to be used over again.

FIG. 1357.

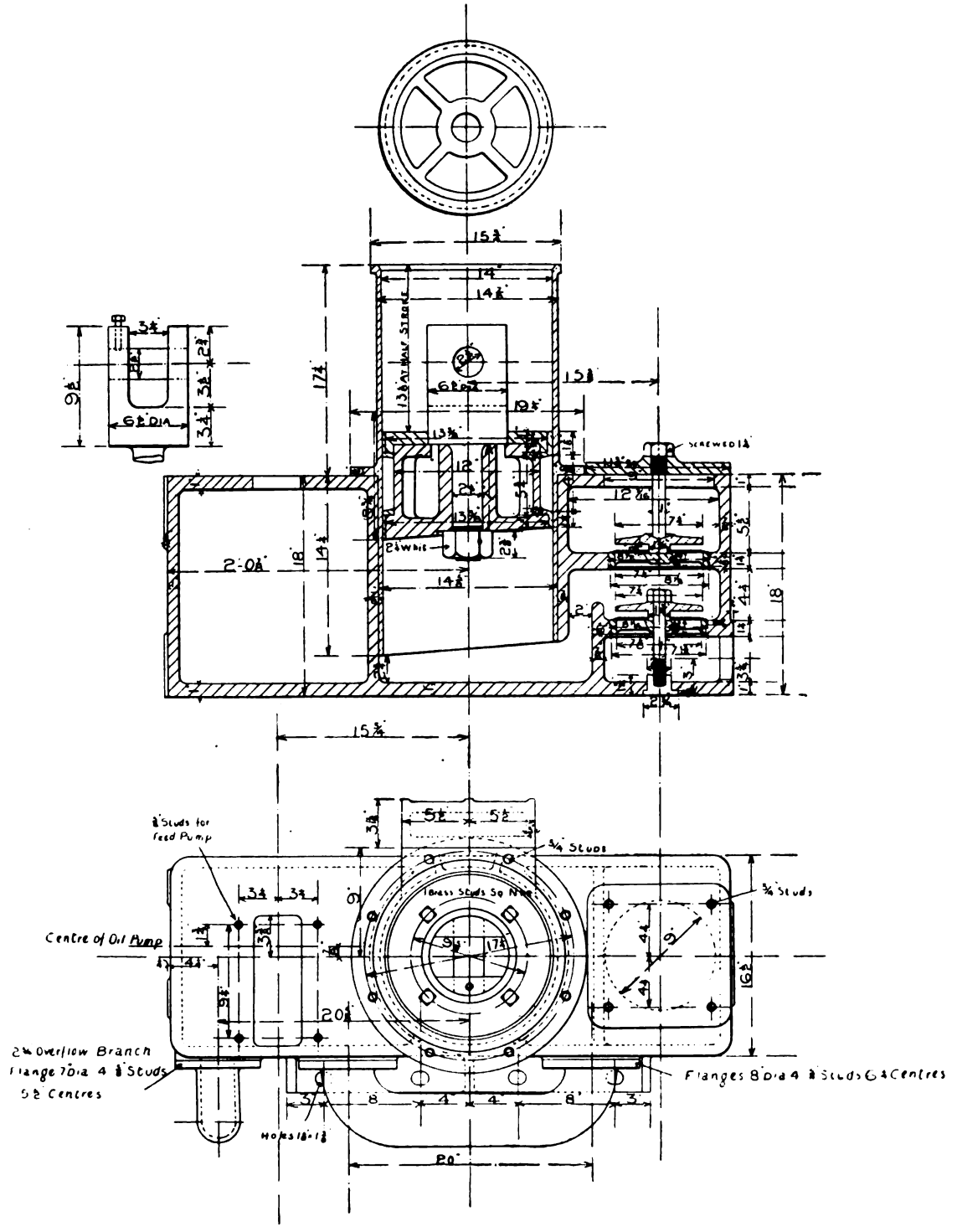

FIG. 1358.

FIGS. 1357 AND 1358.—AIR PUMP, WORTH MACKENZIE ENGINE.

FIG. 1360.

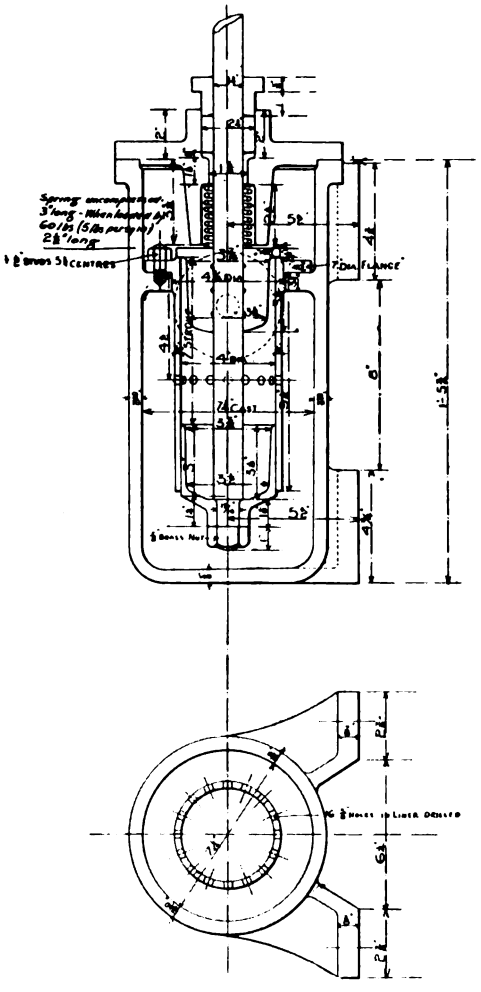

FIG. 1359.

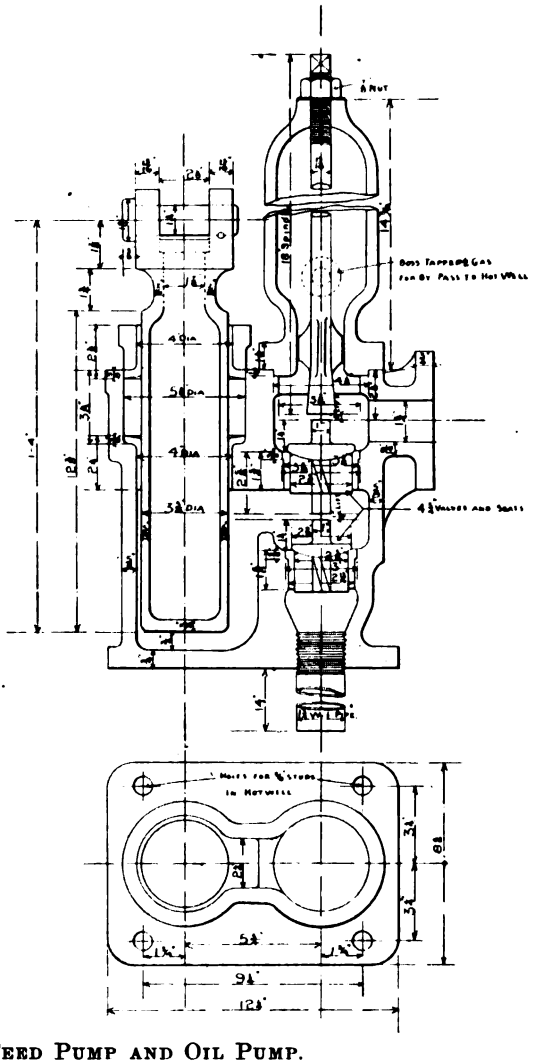

FIGS. 1359 AND 1360.—BOILER FEED PUMP AND OIL PUMP.

PLATE CXVIII.

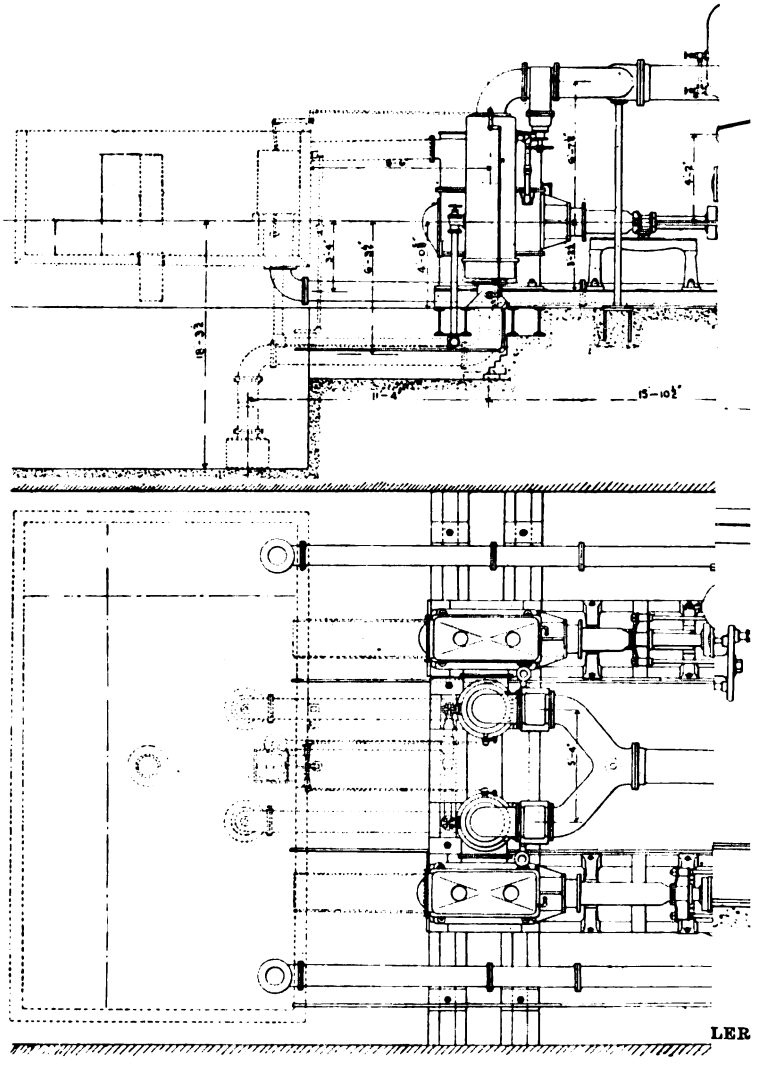

FIGS. 1363 AND 1364.

FIG. 1363.

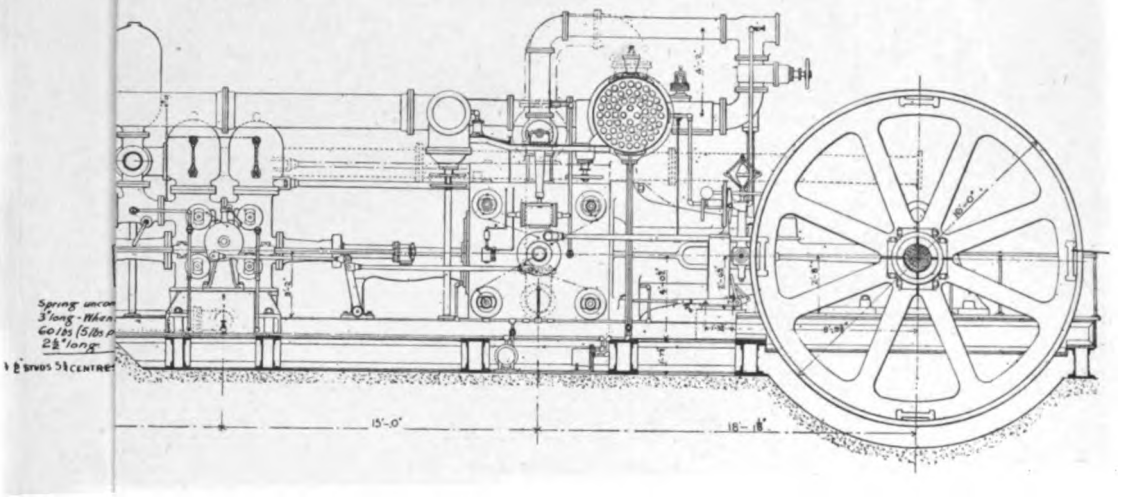

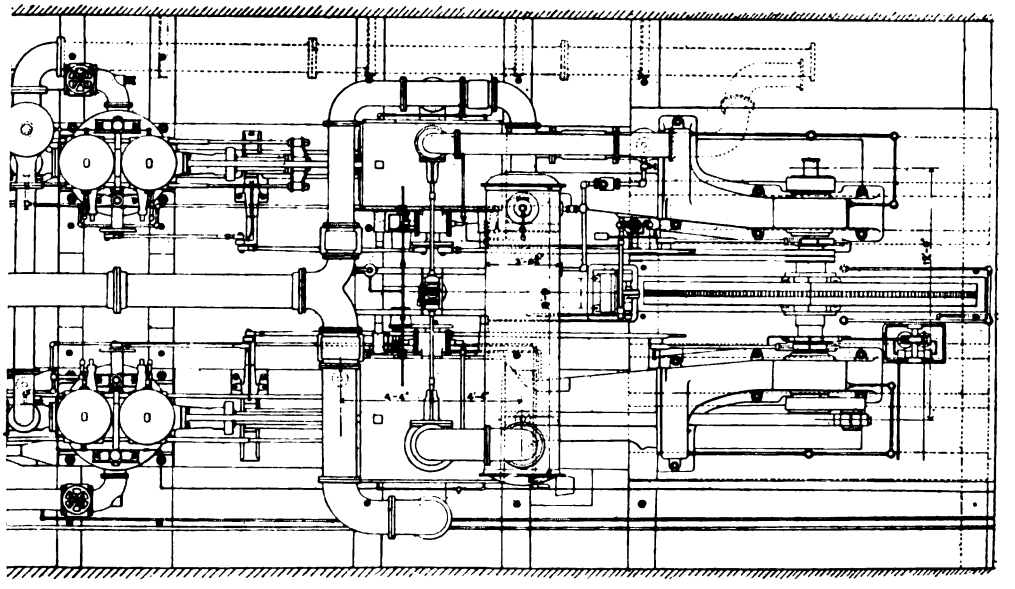

FIG. 1364.

—RIEDLER PUMP, BY FRASER AND CHALMERS.

PLATE CXX.

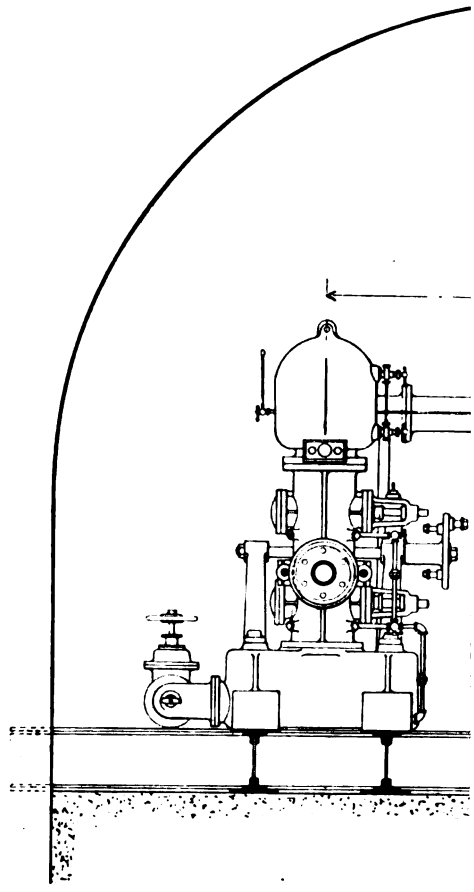

FIG. 1367.—RIEDLER

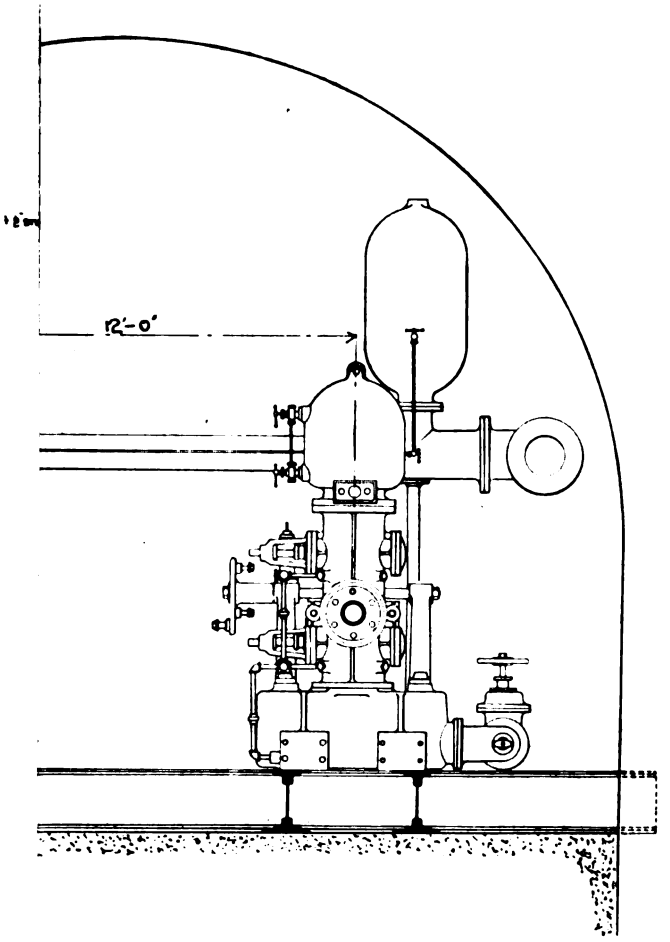

PUMP, BY FRASER AND CHALMERS.

LIBRARY OF THE UNIVERSITY OF CALIFORNIA

Duplex pumping engines are of the non-rotative type, and consist of two complete engines side by side working in opposite directions, each engine operating the valve gear of the other. An engine of this type—and there are numerous designs—by Messrs. Jos. Evans and Sons is shown in figs. 1361 and 1362. The engine is compound, having steam cylinders 25 in. and 44 in. diameter by 3 ft. stroke, with end-to-end ram pumps 11¼ in. diameter. Each engine is provided with a separate jet condenser, which contains the air-pump driven by a separate small steam cylinder. The piston rod is attached to a crosshead which forms the top end of the front ram, and from this is coupled, by means of connecting rods, the back ram, which has also a crosshead. At the pump end is a breeches suction pipe, and the water flows along either side of the pumps to the suction valves fitted to branches from the suction pipe, which at the inner end terminates in an air vessel. Two suction and two delivery valves are provided for each ram, the water being delivered into a large horizontal chamber above the valves, passing thence through a pair of retaining or back pressure valves to the rising main. These latter are shown immediately in front of the breeches delivery pipe.

The steam valves in this engine are operated separately, so that each engine may work independent of the other. The high-pressure cylinder valve is steam-moved, and the spindle of this valve is coupled to the valve spindle of the low-pressure cylinder valve which it works. This arrangement is vastly superior to many duplex engines, where one engine operates the valve of the other, as in such a case both engines must stop in case of a breakdown to one.

In the Riedler pump the valves are closed mechanically, with the object of ensuring the valve being closed before the engine makes the return stroke. A large engine of this description by Messrs. Fraser and Chalmers is shown in figs. 1363 to 1367. There are two steam cylinders each direct-connected to a plunger pump at one end, and driving a flywheel at the other. The engine is compound, one cylinder—the high-pressure—being 36 in. diameter and the low-pressure 57 in. diameter, both with a stroke of 4 ft. The plungers are end to end, and are 6⅞ in. diameter, the rear plunger being connected to the air pump. Figs. 1363 and 1364 show a side elevation and plan respectively, fig. 1365 an end view looking at the condenser end, fig. 1366 an end view looking at the cylinder end, while fig. 1367 is a view looking at the pump end with the cylinders removed. At the far end of the pump chamber the water is collected in a tank, and flows from there to the pumps along the pipes shown on each side, while the condensing water is drawn from the sump below. The cylinders are steam-jacketed, and the exhaust from the high-pressure cylinder passes through a reheater receiver to the low-pressure cylinder. The steam valves are of the Corliss type, worked by a wrist plate operated by eccentrics upon the crank shaft. The wrist plate is connected by a

rocking arm to another wrist plate on the pump, which works the pump valves. Each engine is arranged to be worked separately if required; thus the high-pressure cylinder is fitted with pipes to exhaust direct to the condenser, and the steam receiver is arranged for receiving steam at a reduced pressure from the main steam pipe, for working the low-pressure cylinder alone if necessary.

The idea of the mechanically-moved valve is not new, and the necessity for mechanically-moved valves is really due to the desire to make a small-diameter pump, but running at a high speed, do the same work as a larger pump with the usual slower speed. If a pump with freely opening and closing valves be worked at a high rate of speed, it is found that the valve does not

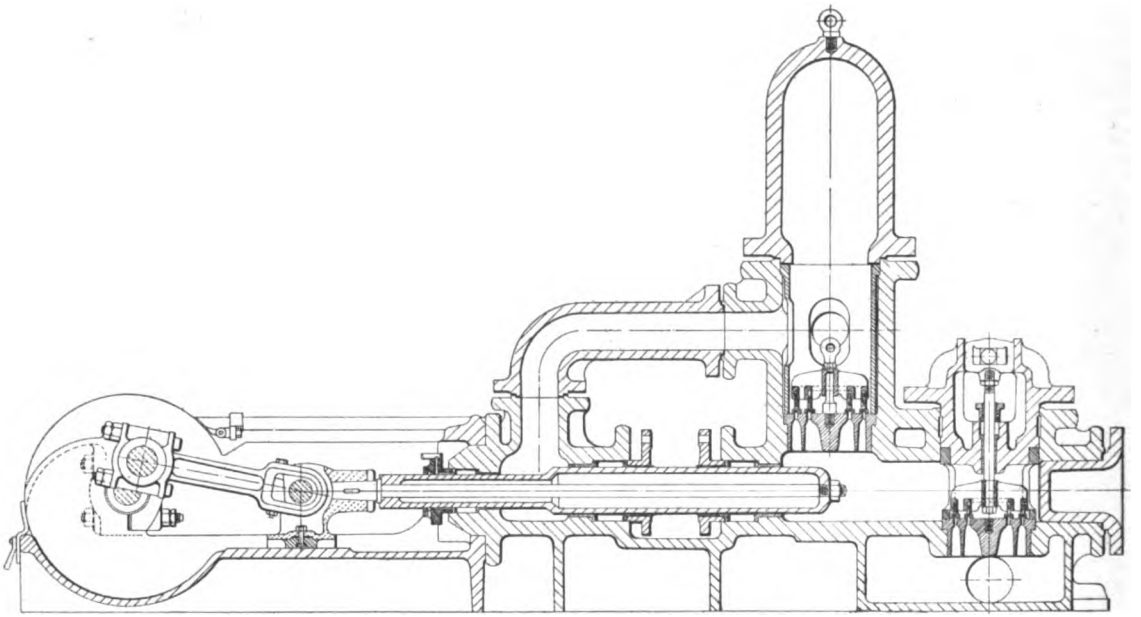

FIG. 1368.—ODDIE-BARCLAY PUMP—SECTIONAL ELEVATION.

close promptly enough to allow all the water behind the plunger to be forced to the delivery pipe, and as a consequence drives some back into the suction pipe, which further has the effect of wasting part of the energy of the engine in reversing the flow of the suction column. If, however, valves are so designed that a large number of small valves with a very small lift give a relatively large area, so that the velocity of the water passing through the valve is small, no difficulty will be experienced, nor will it be found necessary to resort to mechanically-moved valves when a high speed is required. A common method of making valve chambers is to form them cone-shaped, the lower and smaller part of

FIG. 1369.

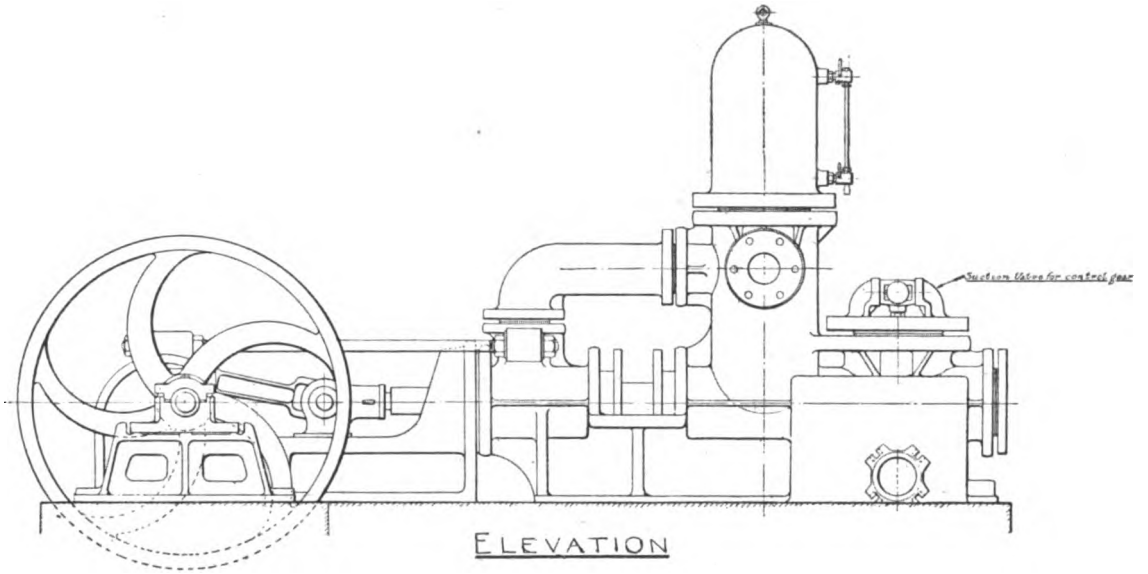

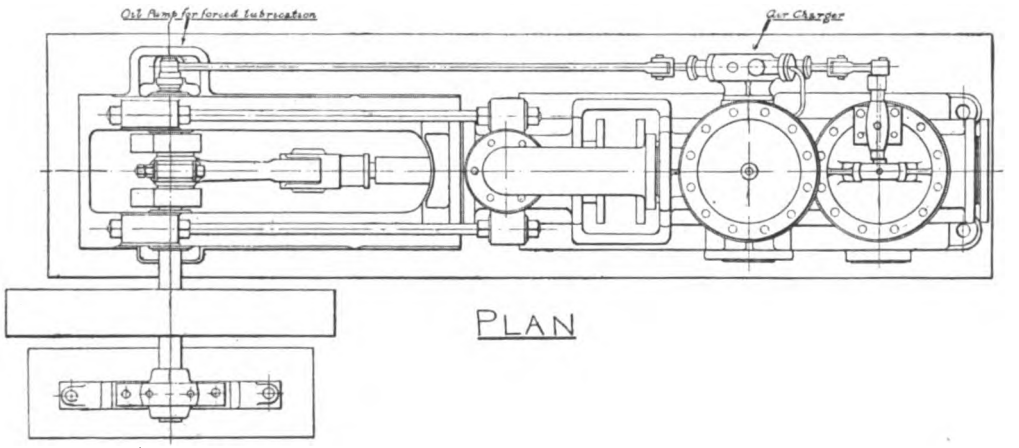

FIG. 1370.

FIGS. 1369 AND 1370.—ODDIE-BARCLAY PUMP.

Fig. 1371.

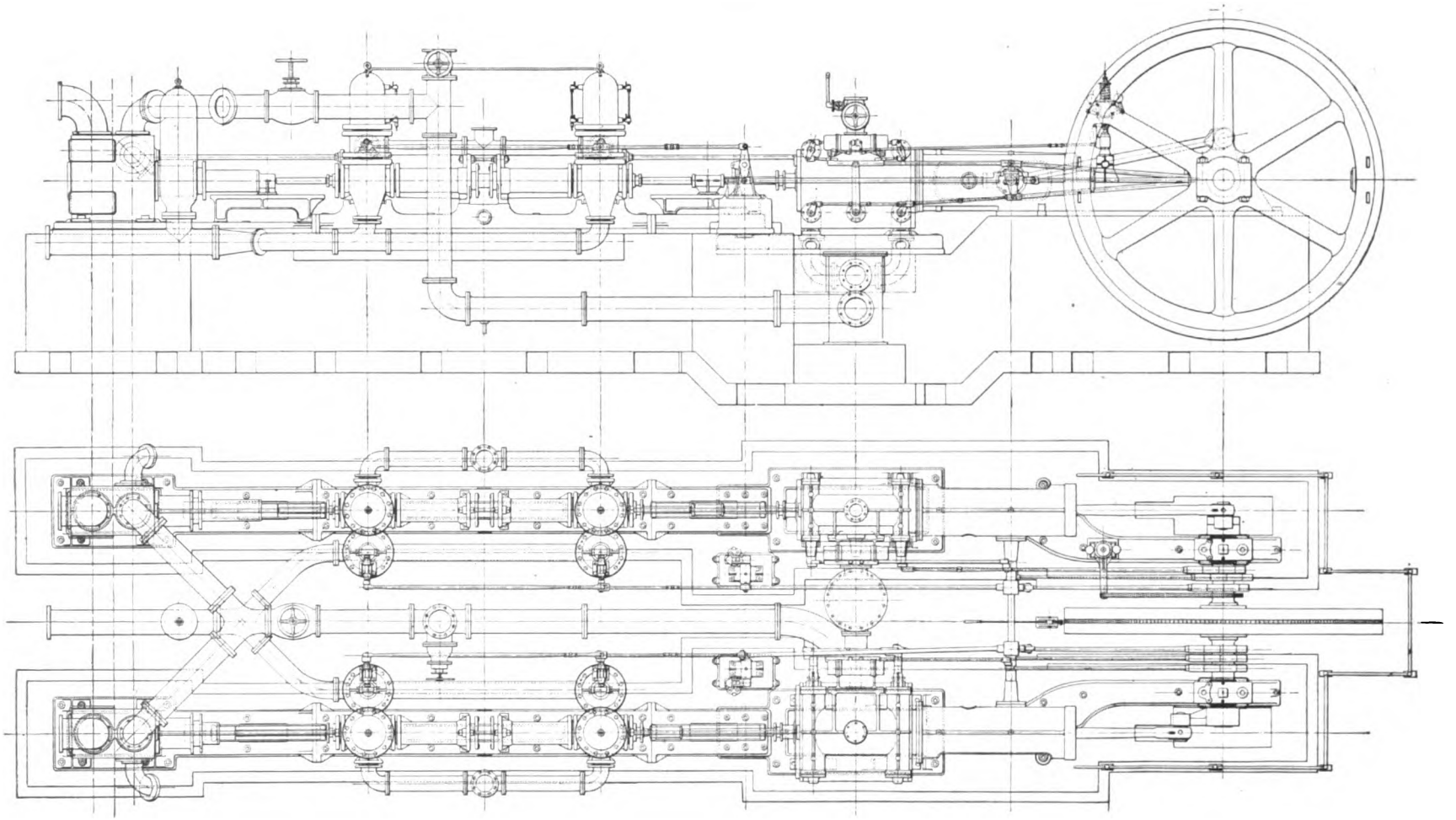

Fig. 1372.

Figs. 1371 and 1372.—Oddie-Barclay Rotative Steam Pump.

the cone being bolted to the suction pipe, with the result that the water has an increased velocity when passing through the valve, just at the point where the area should be increased so as to lower the velocity and increase the pressure. Most of the difficulties experienced in pumps and pump valves would be obviated if the valves were only large enough and properly designed.

Another pump with mechanically-controlled valves is the Oddie-Barclay pump, a sectional elevation of which is shown in fig. 1368. This shows a differential ram pump, with one suction and one delivery valve, though the water is delivered on both strokes. The valves consist of steel with flat faces, working upon hard chilled cast iron seats, both of which are accurately machined. Above the valves is a guide working loose on a spindle in the case of the discharge valve, but in the case of the suction valve it is attached to a spindle which works on a gland through the cover, the upper end of the spindle being attached to a crosshead working in guide brackets cast on the valve box cover. A die is fitted to the crosshead, and is worked by a small crank shaft operated by a rod from the driving crank. This is better shown in figs. 1369 and 1370, where the connecting rod which serves for driving the air charge and controlling the suction valve is clearly shown in the plan view. Between the guide and the valve, however, is a rubber cushion, which is rectangular in section and cylindrical in form, and fits into annular grooves, both in the valve and guide, and really forms the connection between valve and guide. The discharge is not controlled in any way, opening and closing freely by the action of the ram. The suction valve, however, is free to open on the commencement of the return or "outward" stroke of the ram, but is mechanically closed by the small crank at the commencement of the "inward" stroke, thus preventing "slip" through this valve. At the end of the delivery stroke, the small crank raises the guide but does not open the valve, this being done by the water passing into the pump. Very excellent results have been obtained from this pump, indicator diagrams taken from the pump barrel showing almost a perfect rectangle, and giving a high volumetric efficiency. The delivery side is provided with an air vessel, which is kept constantly charged with air, by means of a small pump, as shown in fig. 1370. Another small pump is also provided at the driving crank end for forced lubrication of all the working surfaces.

Figs. 1371 and 1372 show a large compound condensing steam-driven Oddie-Barclay pump, in which the cylinders are 25 in. and 42 in. by 4 ft. stroke. Both cylinders are fitted with Corliss valve gear, having adjustable cut-off, the high-pressure cylinder being also provided with an automatic cut-off gear controlled by a governor. The flywheel is 15 ft. in diameter and weighs 15 tons, and is provided with barring gear. The four pump rams are $7\frac{1}{2}$ in. actual and $6\frac{1}{4}$ in. effective

diameter, the stroke being of course 4 ft., and will deliver 800 gallons of water per minute against a head of 1,140 ft., which does not include friction. The suction valves are mechanically controlled, the gear being operated by eccentrics on the main crank shaft. The rams, as will be seen, are provided with slippers and guides at each end, which greatly reduces the wear and tear upon the glands, and can easily be removed when required.

To keep a supply of air in the air vessels, which are large and effective for their purpose, a pair of air-charging pumps are provided, a detail of which is shown in figs. 1373 and 1374. These, as will be seen, consist of a small pump, with a spring-controlled delivery valve and an outside spring-controlled "snifter" or suction valve, which can be regulated by means of a screw upon the valve spindle

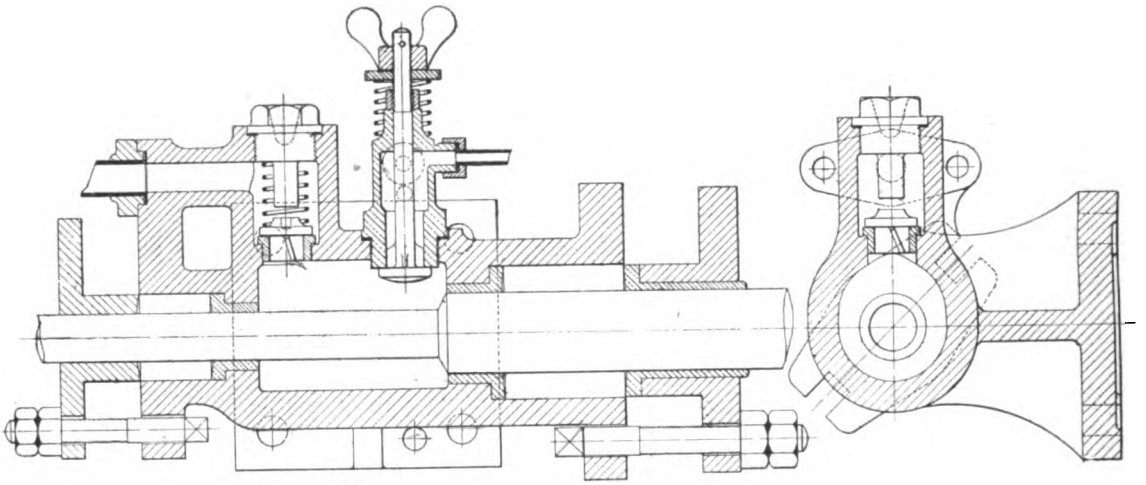

FIG. 1373. FIG. 1374.

FIGS. 1373 AND 1374.—AIR CHARGER FOR ODDIE-BARCLAY PUMP.

and a wing nut. Both air and water are drawn in on the suction stroke, through this valve, the admission of air being of course regulated by the screw, and on the return stroke the air and water are forced through the discharge valve into the air vessel.

Single-acting air pumps and jet condensers are fitted, the pumps being 11½ in. diameter. The condensing water is received from a source at a higher level than the engine, and admission is regulated by means of a valve fixed to the condenser; but to prevent the water on the engine stopping, flooding the cylinder through the exhaust pipe, a balanced valve is provided which the water closes. The engine is also arranged to work non-condensing if necessary by opening the valve on the top

of the vertical portion of the exhaust pipe and closing that on the branch leading to the condensers.

The piston rods are provided with metallic packing, consisting of simple cone-shaped rings as shown in fig. 1375, of a special white-metal mixture.

The "Hastie" pump is one in which the stored momentum of the water is taken advantage of. A sectional view of this pump is shown in fig. 1375, and as will be seen, consists of two hollow reciprocating plungers, with a special conical valve between. There is also a foot valve placed in the suction pipe, in this case near the strum, and a delivery valve in the delivery pipe as shown The valve is so designed to offer as little resistance to the column of flowing water as possible, and the area between the enlarged body of the pipe and the thickest portion of the

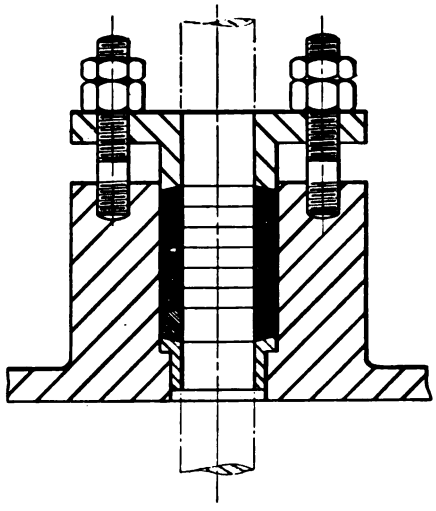

FIG. 1375.—BARCLAY PISTON ROD PACKING.

valve is equal to the area of the pipe or plunger; consequently, supposing a body of water is set in motion, a continual stream of water will pass through the pipe. A bucket pump under certain circumstances will give similar results, and pumps have been known to give a delivery of more water than the theoretical quantity displaced by the bucket. Fig. 1376 has a smaller pump fixed to it discharging clean water through a pressure box, to the glands of the hollow rams, for the purpose of removing gritty substances gathered from the dirty water being dealt with. The pump is driven by belt, but of course may be coupled direct to a steam engine.

Figs. 1377 and 1378 show a three-throw electro-motor-driven pump of the same type, while figs. 1379 and 1380 show a belt-driven double-acting single pump.

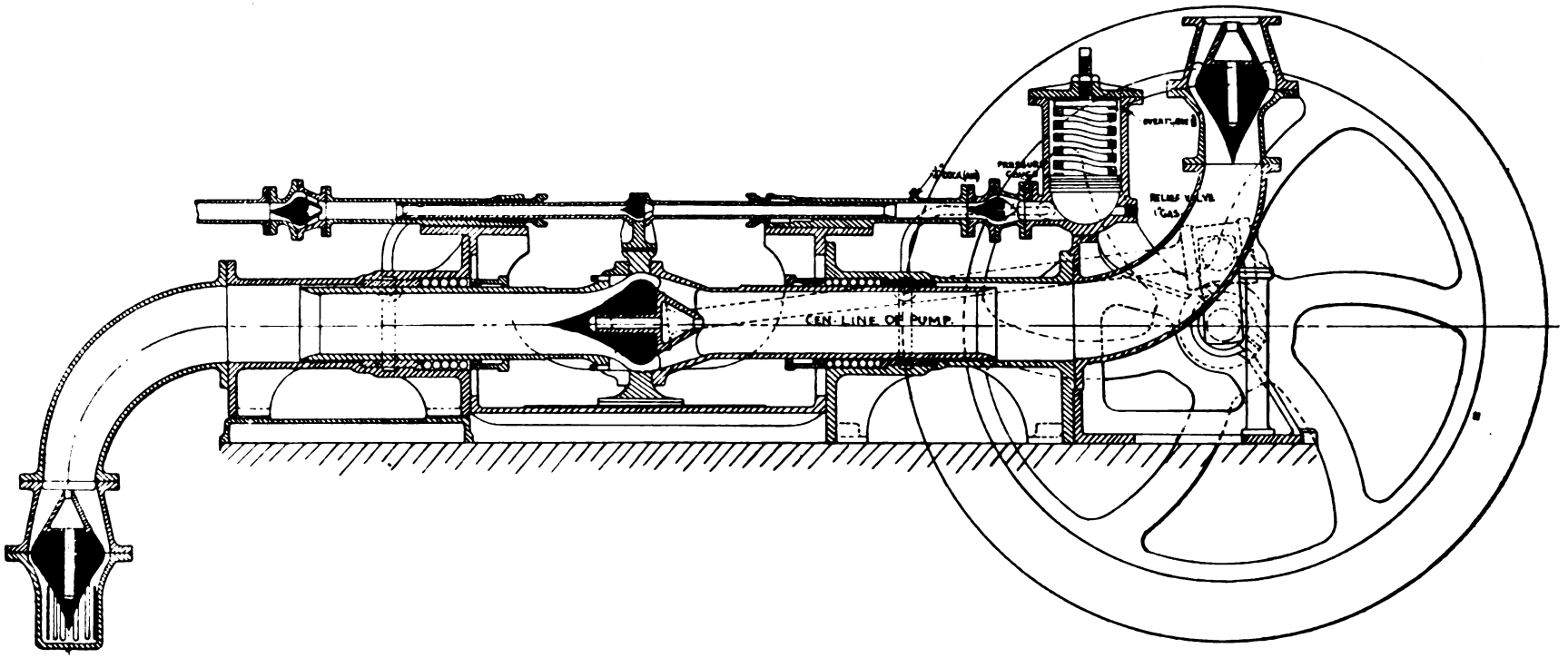

FIG. 1376.—HASTIE PUMP—SECTION.

PLATE CXXII.

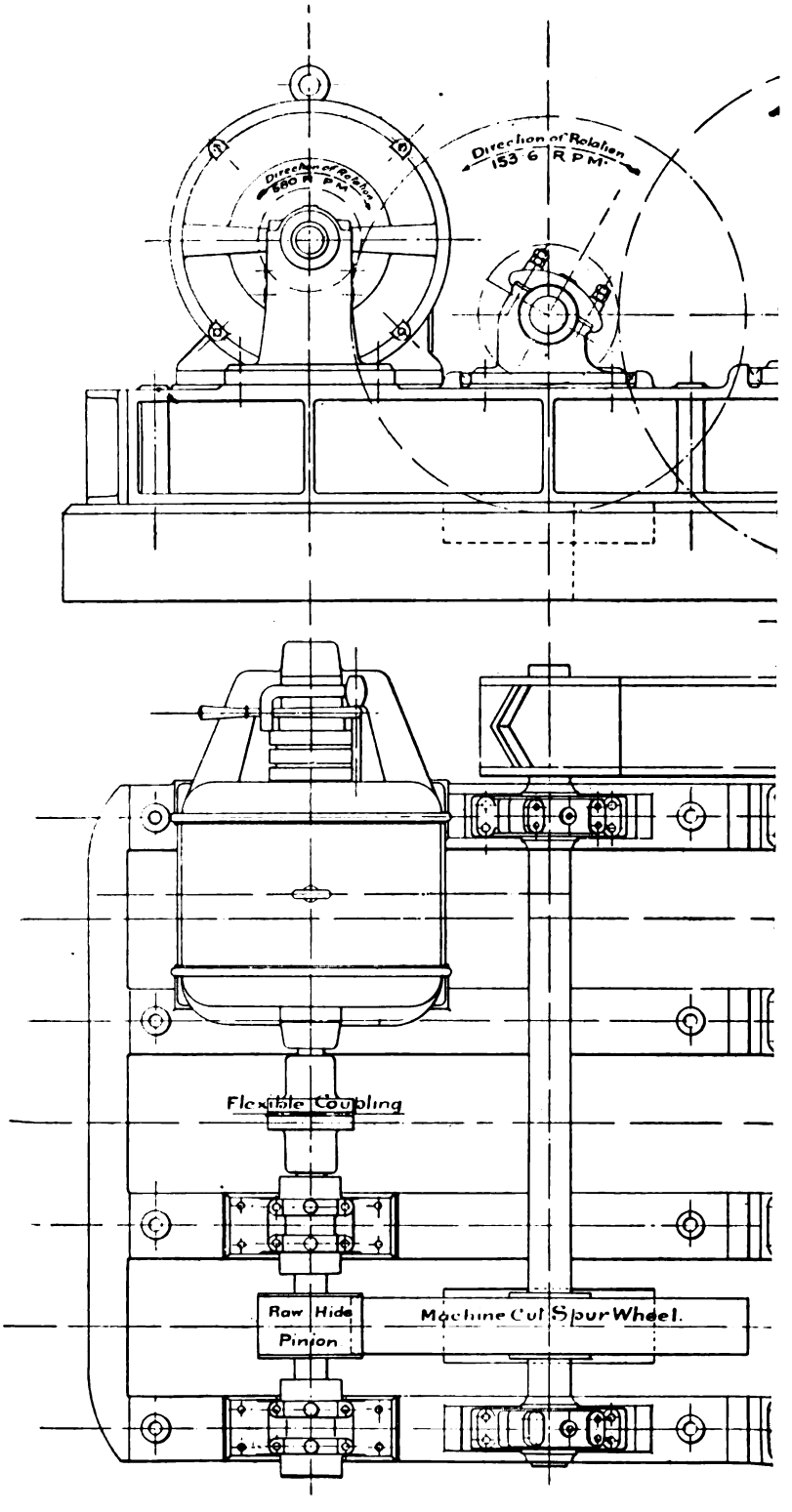

FIGS. 1381 AND 1382.—EL

FIG. 1381.

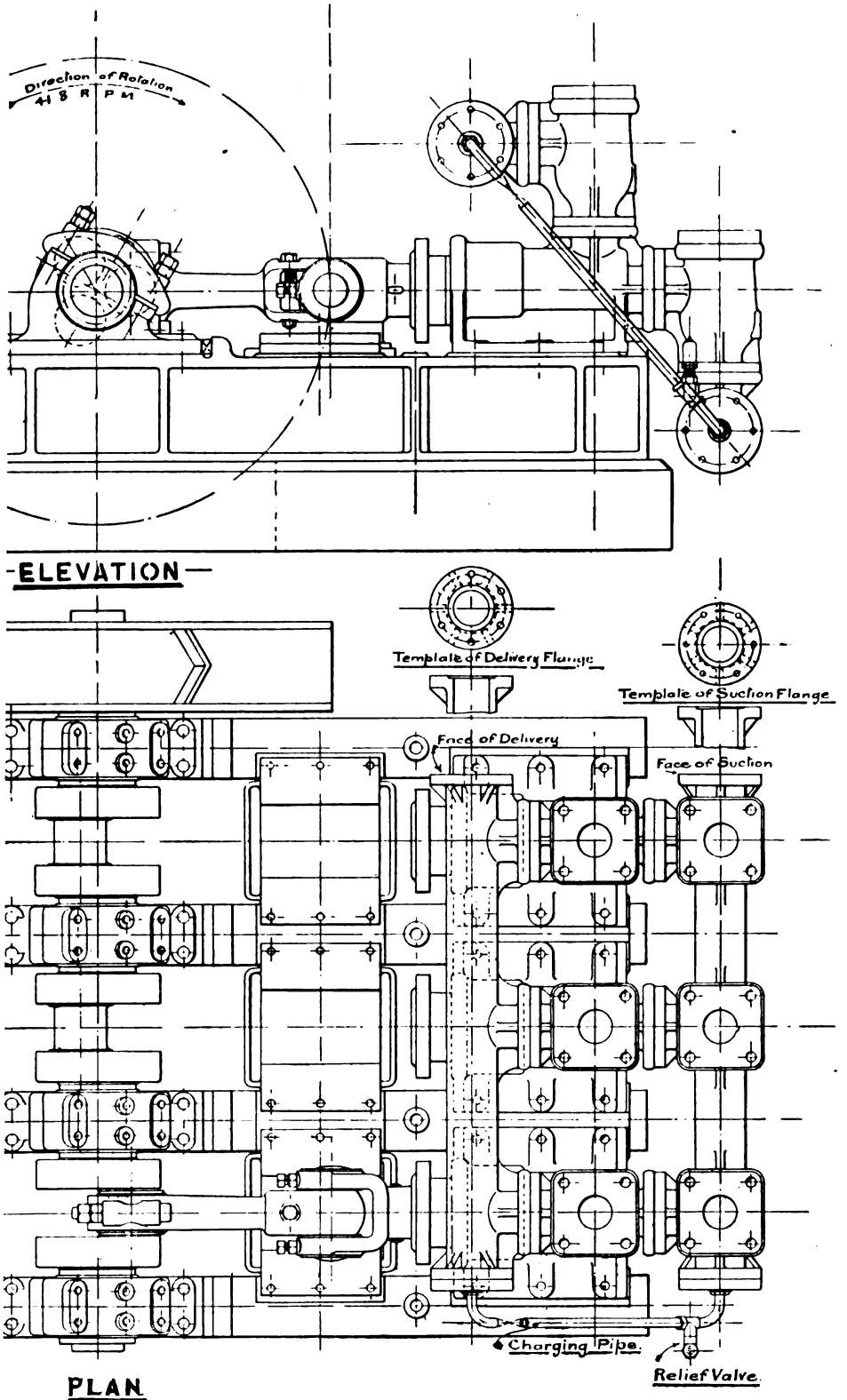

FIG. 1382.

ECTRIC-DRIVEN THREE-THROW RAM PUMP.

A difficulty often experienced with underground engines where the water is bad is with the condenser, owing to the valves and pipes becoming thickly coated with incrustation. With the jet condenser nothing can be done, except to have the condenser about twice the size it ought to be in order to reduce the final temperature of the cooling water and consequent deposition of solid matter; and with a surface condenser the cooling area of the tubes should be very large, and the water should pass through with a fairly high velocity. With pumping engines it is no use mincing matters in the question of initial cost, and it is much cheaper in the end to increase the first cost than to save a few pounds at first and be constantly afterwards troubled with heavy charges for stoppages and cleaning.

It is such difficulties as the foregoing, together with those encountered in transmission of steam from the surface to the pit bottom, with all the attendant trouble with joints and heavy condensation losses, that makes the electrical transmission of power for pumping purposes so vastly superior in efficiency, low working cost, and reliability, and the author is strongly of opinion that it would be capital well invested to instal electric-driven pumps in place of present steam-driven engines when placed underground. With engines on the surface the conditions are not the same, as beyond the first initial cost of the surface engine it cannot be superseded either in efficiency or, probably, working costs, and certainly it would be absurd to dream of replacing an engine of this type with an electro-motor-driven pump.

The first cost of a motor, however, depends largely upon its speed, as the actual horse-power given out by the motor equals

$$\frac{C \times E}{746} f = \text{H.P.}$$

Where

C = current in ampères
E = volts of supply, and
f = the efficiency of the machine.

but E depends upon the peripheral speed of the armature, and consequently if this be small in diameter it usually must revolve at a quick speed, whereas if a slow speed armature is required, it must be large in diameter, with increased cost of material. In order, therefore, to employ high speed low first-cost motors, and to reduce the ratio of gearing between the motor and the pump, the latter is run at as high a speed as possible; and there appears to be no reason why an ordinary three-throw ram pump, with properly designed valves, should not be run at much higher speeds than are at present employed, without resorting to mechanically-operated valves. Certainly there is no pump more suitable for colliery work, as, if properly designed, it is at once simple in construction, its working parts are few, the efficiency is good, and it is thoroughly reliable, and, what is of the utmost

importance, is easily repaired should anything go wrong. This pump is too well known to need further description, but where driven by an electromotor the pump barrels should be large in diameter, the valves having a large area, so that the lift is reduced to a minimum, and the stroke short. The motor may drive the pump through single, double, or even treble reduction gearing, though it must not be forgotten that every additional set of gear wheels means a loss of from 5 to 10 per cent. in efficiency. Figs. 1380 and 1381 show a horizontal treble ram pump by Messrs. Jos. Evans and Sons, driven by a three-phase motor through double reduction gearing. In this case the first motion wheels are machine-cut, the motor pinion being of raw hide, while the second motion wheels are double helical machine-moulded, and are both over-hung.

A much better method, however, of arranging the gearing for large pumps is to provide two spur wheels, with one pump between them and one on each side.

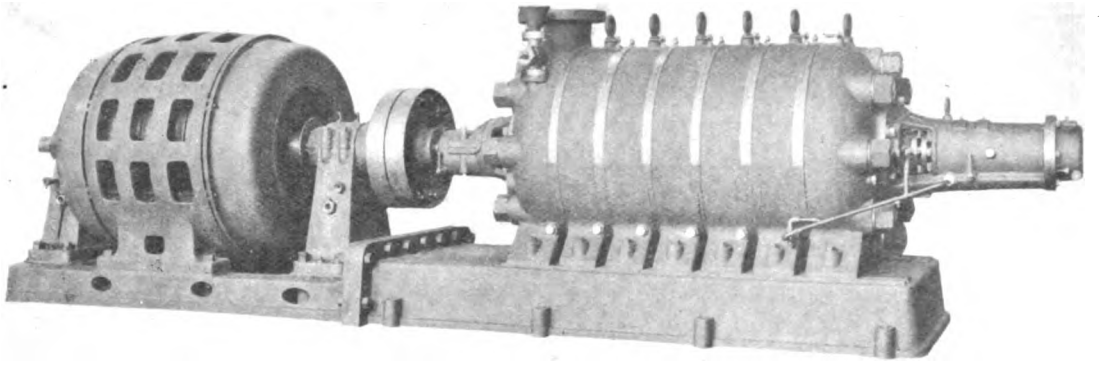

Fig. 1383.—Centrifugal Pump, Worthington Co.

The wheels are each mounted upon a short shaft supported by a pair of bearings, and fitted with a crank disc at the outer end to drive the outside pump, while a crank pin is fitted between two inside discs to drive the centre pump. Such an arrangement prevents heavy torsional strains such as are met with in crank shafts.

The centrifugal pump, however, is perhaps the most suitable for dealing with large quantities of water, as owing to the quick speed it is coupled direct to the motor, and consequently is small in dimensions, occupies small space, and the first cost is thus kept low. For many years the centrifugal pump was only applied to low lifts, and it was commonly supposed that a lift of 20 ft. was the limit, though the idea of placing a number of pumps side by side, so that the water flowed through each in turn, was well enough known to makers of this type of pump. The

application of electric driving has, however, brought about the development of the high-lift centrifugal pump, and fig. 1383 shows a Worthington pump direct-coupled to a Westinghouse three-phase motor, capable of dealing with 1,350 gallons of water per minute against a total head of 1,650 ft., the speed being 1,450 revolutions per minute. The pump is a six-stage one, and constructed as shown in fig. 1384, which is a section though a three-stage pump, and, as will be seen, consists of a number of impellers—depending upon the pressure head required—keyed to a shaft, revolving in a chamber provided with an annular opening, the circumferential orifice of which exactly coincides with the discharge orifice of the impeller. This opening is extended to the outer circumference where it forms a bend, the opening of which again coincides with the opening in the adjacent

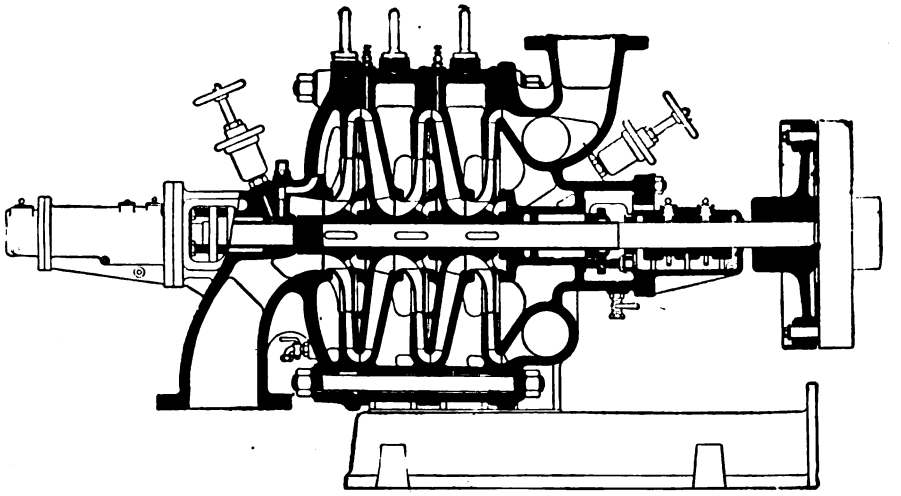

FIG. 1384.—GENERAL SECTION OF WORTHINGTON MULTI-STAGE TURBINE PUMP.

chamber, and thus forms a path leading to the inlet opening at the centre of the second impeller, and so on, until it is finally discharged into the delivery pipe.

There are several pumps of this type now on the market, each maker claiming special advantages for the difference in details of manufacture. Pumps of this description are only suitable, however, where the quantity of water in gallons per minute is about equal to the head in feet, and where the supply is constant, as the pump is specially designed to suit the conditions at a certain speed, which cannot be varied. If therefore the pump is required to deal with the water in a mine, it must be designed with a capacity equal to the feeders, in which case it is constantly in motion, or a reservoir must be provided in which the water is collected and drained off in a certain period of time. The efficiency of a pump under

these conditions may be as high as 72 per cent., but where the head is great compared with the quantity of water, better economical results will in all probability be obtained from a good three-throw pump. A further point of considerable importance is the nature of the water, as grit is very detrimental to the life of the impellers and casings.

Pipes are usually of cast iron, in 9 ft. lengths, though steel pipes are now being adopted mainly on account of their less weight. For moderate pressures up to say 50 lb. per square inch, the ordinary loose flange steel pipe is fairly satisfactory, though trouble is sometimes experienced with the joints, and consequently it is necessary to see that the jointing rings are of the best quality. For higher pressures the flanges must be solid, and either solid welded, screwed and expanded, or riveted on to the pipe, the face being machined, and where the pressure is over 100 lb. per square inch should be made with a spigot and faucet. Where the water in the pit is corrosive, however, cast iron is the best material to adopt.

For shaft work, the flanges should be solid if steel pipes are used, and steam pipes must be provided with proper expansion glands, or bends must be arranged in such a way and sufficiently large to allow the expansion to be taken up. The thickness of cast iron pipes may be determined from the following formulæ:—

$$T = \frac{P + 100}{7{,}200} D + 0{\cdot}4 \left(1 - \frac{D}{100}\right)$$

Where T = thickness of metal in inches,
D = internal diameter of pipe in inches,

and for the pump barrels of bucket pumps

$$T = \frac{P \times D}{2{,}000} + 0{\cdot}5,$$

which will allow for re-boring. For the suction and delivery pipes of "inbye" pumps, where the pressure is small, "Forster's" patent pipes are very handy, being easily put together. These are very similar to the ordinary spigot and "socket" pipes, except that the socket is slightly cone-shaped, being smaller at the inner end of the socket, so that an indiarubber ring placed on the spigot end of the following pipe is compressed as it is shoved into position. It is now possible, however, to obtain steel socket pipes, and these can be laid underground and caulked with lead, by using what is known as lead wool.

Expansion joints of steam pipes in the shaft should be brass-lined on the sliding surfaces, as shown in fig. 1385, which shows an expansion joint, ordinary spigot and faucet joint, and supporting brackets. Where the pressure is over 40 lb. to 50 lb. per square inch, such an expansion joint must be tied together by means of long bolts to limit the amount of movement in the joint.

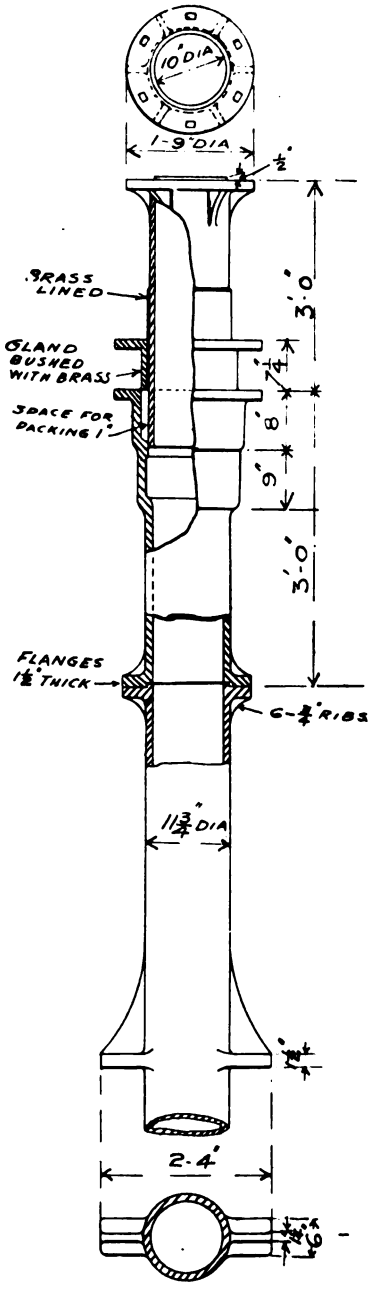

FIG. 1385.—EXPANSION JOINT.

The pressure due to a column of water is obtained from

$$P = 0{\cdot}433\,H,$$

where P = pressure in pounds per square inch,
H = head of column in feet,

and in designing a pump of any given capacity and head, the total lift will include the depth of the suction, or the total head to be taken into account is the difference from the level of the water in the standage to the level of the delivery pipe, and in addition to the actual head there is that due to friction. The friction depends upon the velocity, and the extra head (h) necessary to overcome the friction may be determined from

$$h = \frac{(4\,V^2 + 5\,V - 2)}{12\,D} \times \frac{L}{100}$$

where V = velocity in feet per second,
D = diameter of pipe in inches,
L = length of pipe in feet,

or if the quantity in gallons per minute be given, then the loss of head due to the friction may be determined from

$$H = \frac{G^2 \times L}{(3\,D)^5}$$

where H = loss of head in feet,
L = length of pipe in yards,
D = diameter of pipe in inches,
G = number of gallons flowing through the pipe per minute.

$$G = \sqrt{\frac{(3\,D)^5 \times H}{L}}$$

$$D = \frac{1}{3}\sqrt[5]{\frac{G^2 \times L}{H}}$$

and

$$L = \frac{(3\,D)^5 \times H}{G^2}$$

The friction, however, also depends upon the rough or smooth state of the pipes, and the cleanliness or otherwise of the water, and due allowance must be made for both; where the pipes are old and incrusted the loss of head due to friction may be double that given in the above formulæ.

The quantity of water flowing in a pipe depends upon the diameter and the velocity, and

$$G = V \times 0{\cdot}7854 \times D^2 \times 0{\cdot}0434$$

or

$$Q = V \times 0{\cdot}7854 \times D^2 \times 0{\cdot}434$$

where G = gallons per second,
V = velocity in feet per second,
D = diameter of pipe in inches,
Q = weight of water delivered in pounds per second.

The following table gives the capacity of pipes from 1 in. to 15 in. in diameter, 1 ft. in length:—

CAPACITY OF PIPES.

Diameter.	Area.	Discharge at a velocity of 1 ft. per second.		Gallons per minute.
Inches.	Square inches.	Gallons.	Lb.	
1	0·785	0·033	0·337	2·022
1¼	1·227	0·052	0·527	3·162
1½	1·767	0·076	0·759	4·560
1¾	2·405	0·103	1·034	6·204
2	3·141	0·135	1·350	8·001
2¼	3·976	0·171	1·709	10·26
2½	4·908	0·211	2·110	12·66
2¾	5·939	0·255	2·553	15·31
3	7·068	0·304	3·040	18·24
3½	9·621	0·413	4·137	24·78
4	12·56	0·540	5·400	32·40
4½	15·90	0·683	6·837	41·02
5	19·63	0·844	8·440	50·64
5½	23·75	1·021	10·21	60·86
6	28·27	1·215	12·15	72·90
7	38·48	1·654	16·54	99·24
8	50·26	2·161	21·61	129·6
9	63·61	2·735	27·35	163·8
10	78·54	3·377	33·77	202·2
11	95·03	4·086	40·86	244·8
12	113·1	4·863	48·63	291·6
13	132·7	5·899	58·99	353·4
14	153·9	6·617	66·17	396·6
15	176·7	7·598	75·98	456·0

The velocity due to the head may be determined from

$$V = \sqrt{61{\cdot}4\,(H - h}$$

where H = the maximum head,
and h = the loss of head due to friction,
V = velocity in feet per second.

Theoretically the velocity of water in a suction pipe, taking the pressure of the atmosphere as equal to a column of water 33 ft. in height, would be

$$V = \sqrt{64{\cdot}4 \times 33} = 46 \text{ ft. per second nearly,}$$

but as this depends upon the vacuum, always more or less imperfect, the free entry of the water into the pipe, and the frictional resistance, it is practically impossible to obtain such a velocity. At the best, a pressure equal to a head of about 25 ft. only can be obtained, but it is more usual to assume this to be between 10 ft. to 15 ft., and the suction pipe should be designed large enough to limit the velocity to about 6 ft. per second. Frequently suction pipes are so small that a high velocity is allowed for, with the result that with a long suction pipe the valves knock badly, the reason being that the momentum stored up in the moving column of water will not allow the suction valve to return to its seat until some time after the plunger has commenced its stroke, and conseqently the valve is closed by the plunger when it is moving with some velocity, instead of just when it is beginning its stroke, and moving comparatively slowly.

In order to reduce the knocking, snifting cocks are placed in the suction pipe near the valve. This allows a small quantity of air to be drawn in which cushions the blow; in other cases, air vessels are very frequently employed, but there is no need for either if a little extra capital be invested in the suction pipe.

The power required to lift a quantity of water depends upon the height to be raised, and, like the problem of winding, the slower the speed and the larger the quantity dealt with per stroke, the higher the efficiency; though again this is influenced by the initial cost of the plant, and it may be cheaper to instal a high speed pump with a low efficiency and a low capital cost, than to instal a high-efficiency slow-speed type of pump at a much larger cost, which question is mainly affected by the cost of the power. If

G = gallons of water per minute,

P = pounds of water per minute $= G \times 10$,

H = total head, including friction.

Then

$$\text{H.P.} = \frac{G \times 10 \times H}{33{,}000} = \frac{P \times H}{33{,}000}$$

which gives the horse-power of the water alone. In addition to this there is the loss in the pump and gearing and in the engine or motor driving the same. A good slow-speed steam engine will have an efficiency of 85 to 90 per cent., and direct acting plunger pumps will have an efficiency of 90 to 98 per cent., so that if

E = efficiency of steam engine,

e = efficiency of pumps,

Then

$$\text{Actual H.P.} = \frac{P \times H}{33{,}000 \times E \times e}$$

For draining in-bye workings probably nothing is so suitable as the three-throw electric-driven ram pump, which should be designed to keep the velocity of the water on the suction side down to 3 ft. per second, and the velocity in the delivery pipes should never exceed 6 ft. per second. Knowing the quantity and the velocity, the diameter of the pipe is easily determined, and in a similar manner the diameter and stroke of the plungers is found, remembering that it is better to keep the plunger and valves large, and the stroke short, with a higher speed in preference to a long stroke and a slow speed. The efficiency of such a pump and its gearing may be taken as 75 to 80 per cent., so that

$$\text{B.H.P.} = \frac{\text{P} \times \text{H}}{33{,}000 \times 0{\cdot}75}$$

which will be the brake-horse-power required at the pulley or pinion wheel of the electric motor.

The siphon consists of a pipe connecting a dip working to another point with a rise or hill between. The difference in height, from the top of the rise to the water level in each case, affords the motive force. As is well known, water will rise in a pipe from which the air has been extracted, thus forming a vacuum, to a height of 33 ft., the time required depending upon the frictional resistance of the pipe and the perfection of the vacuum. The pipe from the higher water level to the top of the rise, which must never exceed 27 ft. measured vertically, is the suction pipe, termed the "short leg," while the pipe from the top of rise to the lower water level, termed the "long leg," is the delivery pipe, and this latter must always be longer than the former, and its excess in length measured vertically determines the velocity of the flow for a given quantity of water and diameter of pipe, or, in other words, the difference in height of the two levels measured from the top of ridge is the effective "pressure head" giving motion to the water. It is necessary for the easy starting of siphons to fix a small pump on the delivery side of the ridge, and a non-return valve should be fitted to the suction end, and the delivery end is fitted with a stop cock, which may be closed so as to retain the water.

Pumping by ropes is often convenient, and consists of fixing a rope sheave on the crank shaft of, or driving through gearing, a reciprocating pump, but is expensive in wear and tear of ropes. Where main-and-tail haulage is in use, the pump sheave may form the return sheave; with endless-rope haulage, a small branch rope may be taken to the pump.

Hydraulic transmission of power for pumping has been adopted in some cases, but it is neither so flexible or so convenient as electrical transmission, where this is available. With compressed air the pumps are usually of the direct-acting cylinder type.

Bibliography.—"Winding Water in American Mines," *Colliery Guardian*; Federated Institution of Mining Engineers: "Pumping Appliances at Eltringham Colliery," by J. R. Guthrie, vol. ii.; "Designs for Pump Valves," by H. Wormald, vol. ix.; "The Brown Hydraulic System of Hydraulic Transmission," by W. F. Lang, vol. xiv.; "Lifting a Vertical Rising Main by Expansion," by W. Howe, vol. xii. Mining Institute of Scotland: "Working Underground Pumps by means of Hydraulic Pressure," by Robert T. Moore, vol. v., p. 290, and vol. xii., 168; "Air Vessels," by Dugal Baird, vol. x., p. 251, and by Allan Andrews, vol. xi., p. 113. American Institute of Mining Engineers: "The Worthington Compound Duplex Pressure Pump," by R. W. Hunt, vol. iv., p. 317; "Pumping Machinery," by Henry Davey; "Mine Drainage," by Stephen Mitchell; "Centrifugal Pumps, Turbines and Water Motors," by Charles M. Innes.

CHAPTER IX.

THE GENERATION AND TRANSMISSION OF POWER.

As regards most collieries, there is only one source from which the necessary power for working the mine can be derived, and that is coal. With the development, however, of electric power transmission, where electric supply companies put down large central generating stations for the generation of electricity upon a large scale, and are prepared to supply a colliery company with ready-made current, at a reasonable price, another source of energy becomes available. It is very rare that a colliery is placed near an available source of water power, and though one or two mineral mines are so placed, and are justified in going to greater capital expenditure in harnessing that source, seeing all the coal has to be purchased for the generation of steam, yet supposing a water power supply to be available, it is questionable if it could be applied so as to give a lower cost per horse-power than a steam installation at a colliery.

With electricity supplied in bulk the determining factor is the cost of the current delivered at the switchboard from which the supply is distributed to the various engines at the colliery, and it must always be remembered that a supply company has (1) coal to purchase, (2) cost of generating plant, (3) labour charges, and (4) cost of the transmission line, all to provide for before receiving any profit; but notwithstanding what appears at first sight to be an almost impossible task, an electric supply company with its power plant fully loaded, may be so able to reduce the cost of generating and transmitting as to be able to supply current at a cheaper rate than it can be produced for at the colliery. The main factor, however, in the question is the market value of the fuel that necessarily must be consumed to supply the power for operating the colliery plant.

Another factor, assuming for the moment that an electric supply is available, is the question of electric winding, as the winding plant is the most important operation, and necessarily has a large bearing upon the general question. For a steam winding engine it is necessary to provide boilers, foundations and chimney for same, feed pumps, water reservoir, and steam pipes; while for the electric winder it is only necessary to provide the—in the case of a three-phase plant—

winding drum and motcr, or in the case of an Ilgner set, the flywheel motor-generator, in addition to the drum and motor, and the decision rests upon the relative initial cost of the different systems, together with the price of the current supplied. A high-class steam engine will give very economical results, and the steam consumption may be brought down to as low as 30 lb. of steam per actual horse-power per hour, provided the engine is not too large for its work, and that it is kept constantly employed, and, roughly speaking, such a steam plant would cost, including boilers, &c., the same as an Ilgner winder, but there would probably be reduced labour charges in favour of the electric system, though on the other hand the depreciation and upkeep of the electric plant would probably be considerably more than the steam plant, and there are many practical considerations that are distinctly in favour of the steam winder. On the whole, therefore, the question seems to resolve itself into the difference between the cost of the power supplied and the value of the coal that would otherwise be used, and where the former is at a cheap rate, and the latter of good market value, then the electric supply would appear to be the system to adopt; but where steam can be generated from worthless or very cheap fuel, or from the waste gases of coke ovens, then the steam plant must undoubtedly be the cheaper.

During recent years an attempt, with very considerable success, has been made to produce a gas engine which would work with ordinary coke oven gas. Gas engines working on a town gas supply have now been successful for a number of years, but recently the town gas has been displaced by what is termed "producer" gas, the "producer" enabling the owner to generate his own gas direct from coal; but so far only anthracite coal has been applicable for this purpose, the "bituminous" quality being too rich in volatile matter to enable the gas generated from it to be directly applied to driving gas engines. The suction gas producer, briefly described, consists of a firebrick-built furnace in which is heated to incandescence coal or coke. The furnace is usually circular in shape, and has fitted to it a small boiler for generating steam and a hopper through which the fuel is fed. To start the furnace, a small fan is provided to provide sufficient draught to raise the temperature, after which the "suction" produced by the gas engine in drawing the gas into the cylinder is found all that is necessary—hence the term "suction gas producer." The steam from the boiler is led by a pipe to the bottom of the furnace, and, along with a proportion of "air," is decomposed into its chemical constituents, and mixes with the carbon in its passage through the incandescent fuel forming the gas. It is then passed by means of pipes to a scrubber, which consists of a cylindrical vessel filled with coke or sawdust for the greater part, through which water trickles from a spray at the top, the bottom of the vessel forming a shallow reservoir in which the water is always kept at a certain height. Into this water the gas pipe

dips, so that the gas must first pass through it and then through the scrubber, from which it passes to the gas receiver and thence to the engine. The commercial efficiency of such a plant is probably much higher than that of a steam plant, as the capital cost will be less, and though suitable for small isolated works, it is very questionable if they can compete with an up-to-date high-class steam plant. A very great deal depends upon the quality of the fuel, and the attendant whose duty it is to look after the scrubber.

Gas engines, however designed to work with gas from coke ovens, will undoubtedly give a higher thermal efficiency than a steam plant, and no doubt their use will be extended in the future. Unfortunately they cannot be—at a colliery—directly applied to the work of winding, hauling, and pumping, consequently it is necessary to turn the power of the engine into electrical energy for transmission, or, in other words, instead of carrying the gas in pipes to the various small engines, the energy in the gas is turned into electrical energy and transmitted to electro-motors in place of small gas engines. Such engines are for large powers from 1,000 to 2,000 horse-power, and practically the only difficulty experienced in their working has been in the insufficient cleansing of the gas, and if the gas be very dirty, considerable attention must be given to this point. The engines are of what is known as the scavenging type, which means that at the end of the stroke a blast of compressed air sweeps out the burnt gases from the cylinder after the explosion, leaving the space clear for the fresh charge of gas and air for the next explosion, and for large engines the charge is forced into the cylinder by a special pump in exactly the proper proportions.

An installation of gas engines, however, would in all probability be much more costly than a steam plant, and though the efficiency in working would be greater, there is no doubt the upkeep and depreciation would also be greater, so that in the long run the question of installing gas engines against steam would depend upon the amount of power required and the quantity of gas given off. If the former is small, so that there is a quantity of gas to spare, then the steam plant is preferable, on account of its well tried and proved qualities and greater simplicity.

For gas engines, the consumption may be taken as 40 to 50 cubic feet of gas per horse-power hour, though of course this will depend upon its calorific value. From 10 to 15 per cent. of gas will be given off per ton of coal coked in the ovens, which, taking the gas as weighing 0·03 lb. per cubic foot, will be equivalent to about 7,500 to 11,000 cubic feet, and of this 30 to 50 per cent. will be available for driving gas engines.

For steam plant, with the gas passing under boilers on its way to the chimney, a fair average will be to allow an evaporation of 1 lb. of water per lb. of coal coked, though again this is influenced to some extent by the arrangement of the

LIBRARY
OF THE
UNIVERSITY
OF
CALIFORNIA

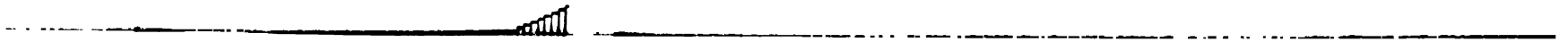

flues and type of boiler. With well-arranged flues and water-tube boilers much better results may be obtained. The ordinary Lancashire boiler is not so suitable for coke-oven firing from a steam-raising point of view as the water-tube or fire-flued type of boiler; and where the water is of good quality the former is undoubtedly the type to adopt, and even with bad water it is a moot point as to whether it would not be more economical to put down water-softening plant in connection with water-tube boilers, than use bad water in either Lancashire or five-flued boilers, and expend labour in cleaning. It may generally be assumed, however, that an efficient water-softening plant is worth the capital expenditure.

For ordinary colliery purposes, the Lancashire coal-fired boiler, owing to its simplicity, freedom from repairs, great capacity, and general reliability cannot be beaten. Water-tube boilers, while undoubtedly giving better results in some respects, have the disadvantage of small steam capacity, which results in excessive priming when a quantity of steam is suddenly demanded, and the first cost and upkeep is certainly much greater than the ordinary Lancashire type of boiler.

As is well known, the Lancashire boiler consists of a cylindrical shell having two fire tubes, while a "Cornish" boiler has only one fire tube, and is but little used. Latterly Lancashire type boilers have replaced both the old cylindrical type and Cornish type boiler, and steam pressures have increased from 40 lb. per square inch up to 100 lb. and even 120 lb. is now not uncommon. There is a distinct advantage in high pressures—though it may be pointed out, it is not sufficient to warrant replacing low-pressure boilers otherwise capable of giving good service, with high pressure boilers on this account alone—as the fuel is more economically consumed, and passing the high-pressure steam through a reducing valve to a low-pressure steam engine has the effect of drying it to some extent.

Figs. 1386, 1387, and 1388 show the arrangement of seating, &c., for Lancashire boilers 8 ft. in diameter by 30 ft. in length, with Hawksley Wild tubes, the flues being arranged so that the gases pass along the tubes down past the back end of the boiler, along the bottom to the front end where they split, and return to the back end along each side, to the main flue at the back leading to the chimney. Each side flue is provided with a damper for regulating the draught at the point where it joins the main flue. At the front end a pocket is formed in the end wall for fitting the sludge pipe, and on either side cast iron doors set in frames give access to the flues. The furnace consists of a plain cylindrical tube into which the first flanged section of the remaining portion of the tube is fitted, and is made a little stronger than the other part. A brick bridge is built at the end of the fire tube, and separates the ash pit from the hot part of the tube. A bridge plate is fitted to the top of this wall, to form a bed for the end of bars to rest upon, and at the same time to support a small brick bridge to prevent the fire falling into

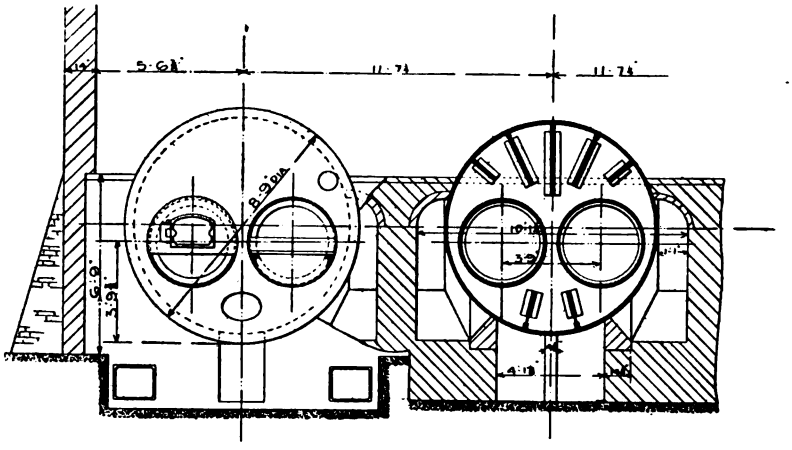

FIG. 1388.—LANCASHIRE BOILER SEATING.

FIG. 1389.

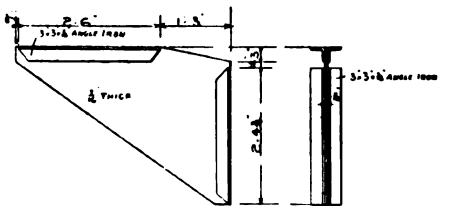

FIG. 1390.

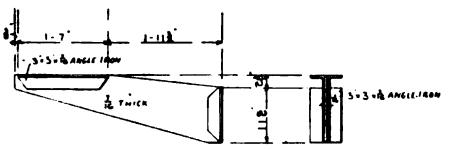

FIG. 1391.

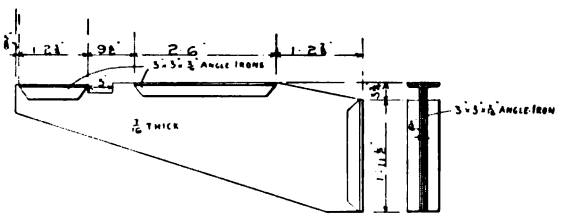

FIG. 1392.

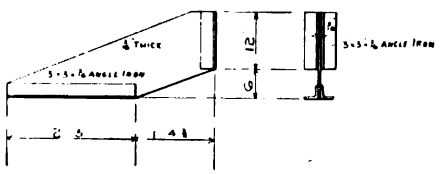

the tube, and which it is usually necessary to renew every time the boiler is laid off for cleaning. The front plate is attached to the shell by means of an angle bar, and stiffened by means of stay plates, details of which are shown in figs. 1389 to 1392. The back end plate is flanged and fitted into the shell and stiffened in a similar manner. Two manholes are provided, one on top of shell and the other at the bottom of the front plate between the tubes, and is fitted with the usual mountings. viz., dead-weight safety valve, high and low water alarm safety valve, and steam stop valve, all on top of shell, while the front is fitted with steam gauge, two sets of water-gauge mountings, and the feed valve, which consists of a screw-down valve, arranged as a back pressure or non-return valve, and under the foot-plate is the blow-off valve.

In front of the stoke-hole are the coal bunkers, over which the trucks containing the coal is run, while the whole range of boilers are contained in a house, roofed over with corrugated iron.

In putting down boilers, it is well to see that the understrata is dry, and to put in a good concrete foundation, covering the whole length and breadth of the space occupied, not only by the boilers, but also the outside walls forming the house and flues, and which will form the base of the bottom flue, and below this at the front end should be formed the sludge drift, a good method being to lay large earthenware pipes in concrete.

As regards the use of mechanical stokers, considerable diversity of opinion exists, at least amongst users, and though good results may often be obtained on a test of a few hours' duration, it is a very different matter, during ordinary working, especially where boilers are hard driven, and frequent demands are suddenly made for steam. For instance, suppose the pit is standing, and the steam pressure steadily rises and blows off, as soon as the pit starts again, each engine makes a sudden call for full steam in order to get quickly away, with the result that the pressure quickly drops, and it becomes necessary for the fireman to get his "poker" to work, stopping all coaling in the meantime until his fire temperature is raised, and then gradually coaling up again. With mechanical stoking the coaling feed is regular, and very little variation takes place in the temperature of the fire, consequently the evaporation is also steady, hence with a sudden demand for steam the mechanical stoker cannot follow up—so to speak—the demand for a higher temperature, and a fireman is considerably hampered in his movements. Where there is ample boiler capacity, and it never becomes necessary to drive boilers, mechanical stokers will undoubtedly prove economical in coal consumption and labour costs, though as a set-off against this must be put the often heavy cost of upkeep.

Figs. 1393 and 1394 show the "Koker" stoker, by Messrs. Meldrum Brothers, fitted in conjunction with their system of forced draught. In this case the whole of

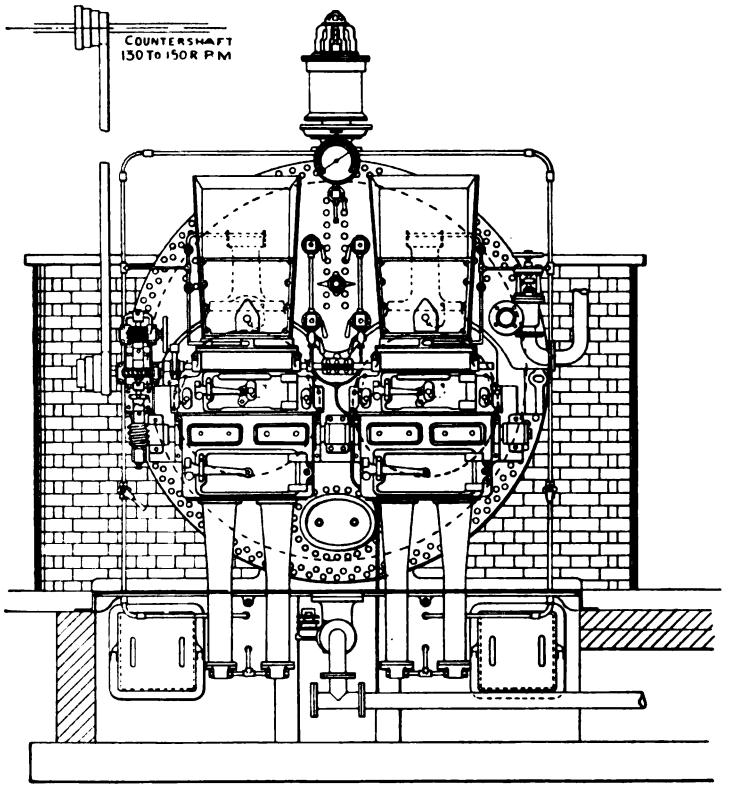

FIG. 1393.

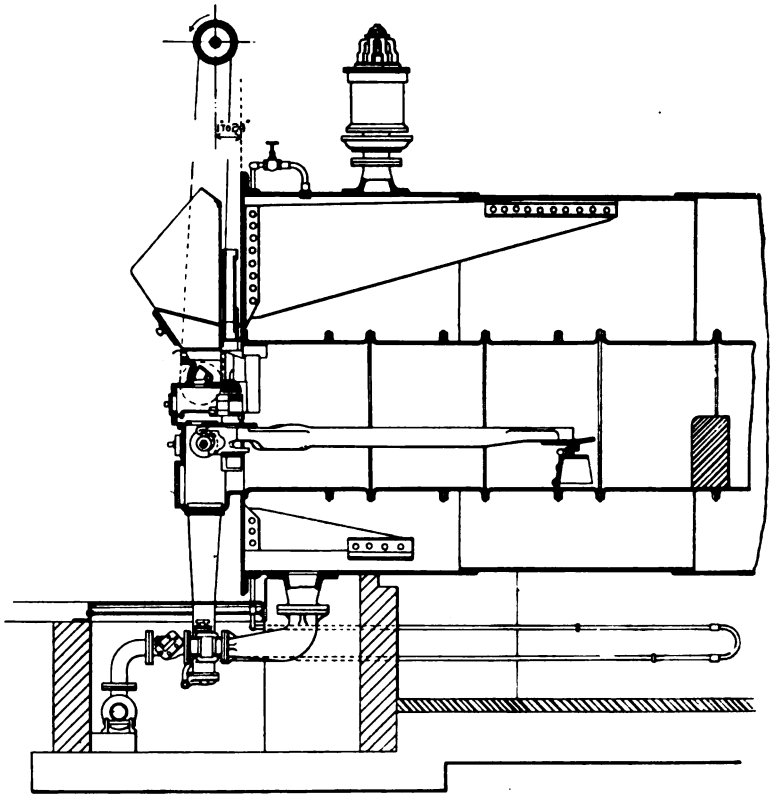

FIG. 1394.

FIGS. 1393 AND 1394.—KOKER STOKER ON LANCASHIRE BOILER.

the fire tube is closed, and the ashpit is kept under pressure by a steam jet which is conducted by means of the pipes as shown, to the vertical intake nozzles, being first superheated by conducting the steam through a bent pipe placed in the bottom flue, as shown. The coal is filled into the top hopper and is gradually fed into the fire, while at the same time a reciprocating motion is given to the firebars. The apparatus is driven by stepped cone pulleys, so that the speed may be regulated, through worm gearing as shown in fig. 1393.

There are several types of mechanical stokers, which all work on somewhat similar lines, and in many cases with very economical results. The Erith under-

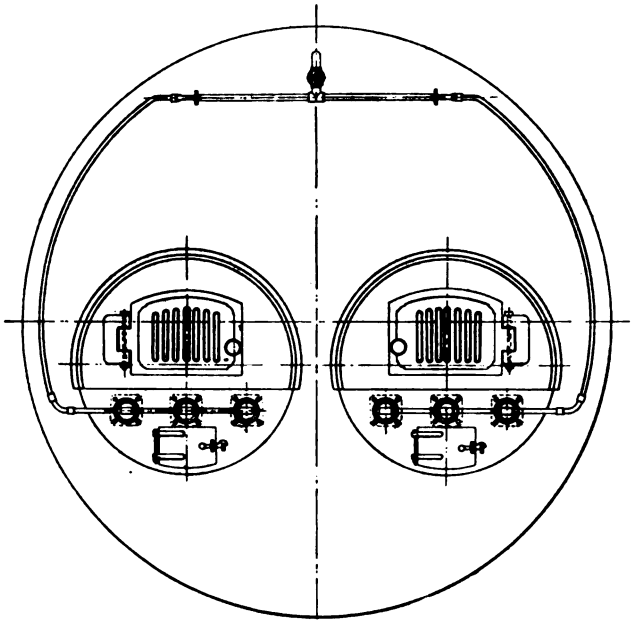

FIG. 1395.

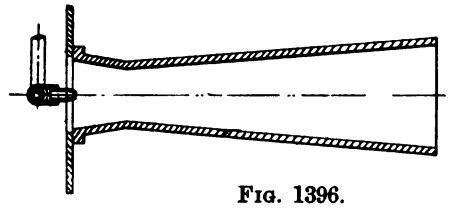

FIG. 1396.

FIGS. 1395 AND 1396.—STEAM BLOWER FITTED TO LANCASHIRE BOILER.

feed stoker is on an entirely different principle, as the coal is fed into the fire below the bars, being pushed forward by means of a steam-driven ram.

The question of forced draught is also one about which considerable diversity of opinion exists. With the "Erith" stoker a small fan is used for this purpose, but in other cases "steam blowers" which consist of a cone-shaped tube fitted below the bars, as shown in 1395 and 1396, in which a steam jet blows, give a supply of air at a higher pressure than would be obtained naturally. A system of forced draught has recently been put forward by Mr. Pearson, which is shown in fig. 1397. The steam is taken direct from the boiler

and led by pipes into the side flues, where it becomes superheated, and is then carried to the air injectors, where it draws in and mixes with air, giving up to it a portion of its heat, and drives it into the fire, on each side of the door at a point a few inches above the dead plate. On one side of the injector apparatus a pipe is led from the flue direct, and in addition to the air, heated gas is also drawn in, so that a mixture of superheated steam, air, and heated gases is delivered into the fire at a high temperature, and it is claimed that

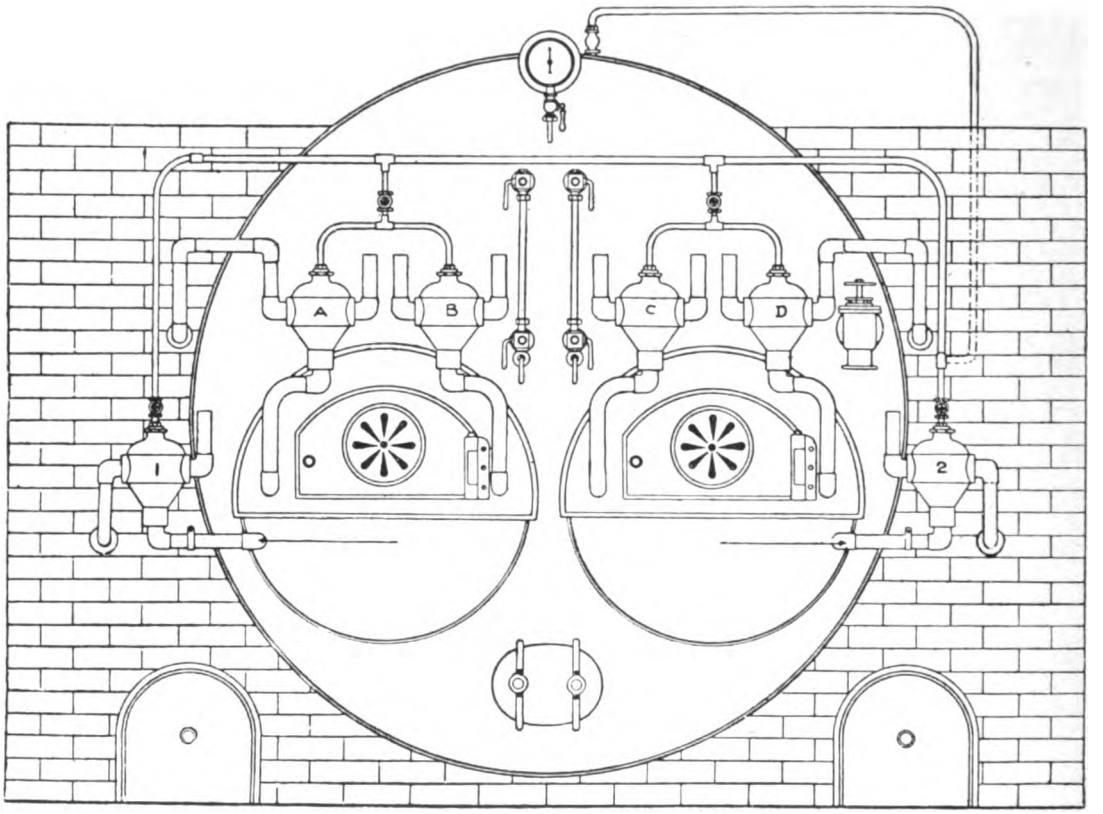

FIG. 1397.—LANCASHIRE BOILER FITTED WITH PEARSON'S PATENT APPARATUS.

the chemical action is such that the hydrogen in the steam is set free and the oxygen in the steam and air is utilised in raising the temperature of the furnace so that the carbon in the fuel is completely consumed. Careful tests with the apparatus have shown an increase of 30 per cent. evaporative efficiency with a marked decrease in the quantity of smoke emitted.

Figs. 1398 and 1399 show a pair of Babcock-Wilcox boilers, which are sufficiently

FIG. 1398.

FIG. 1399.

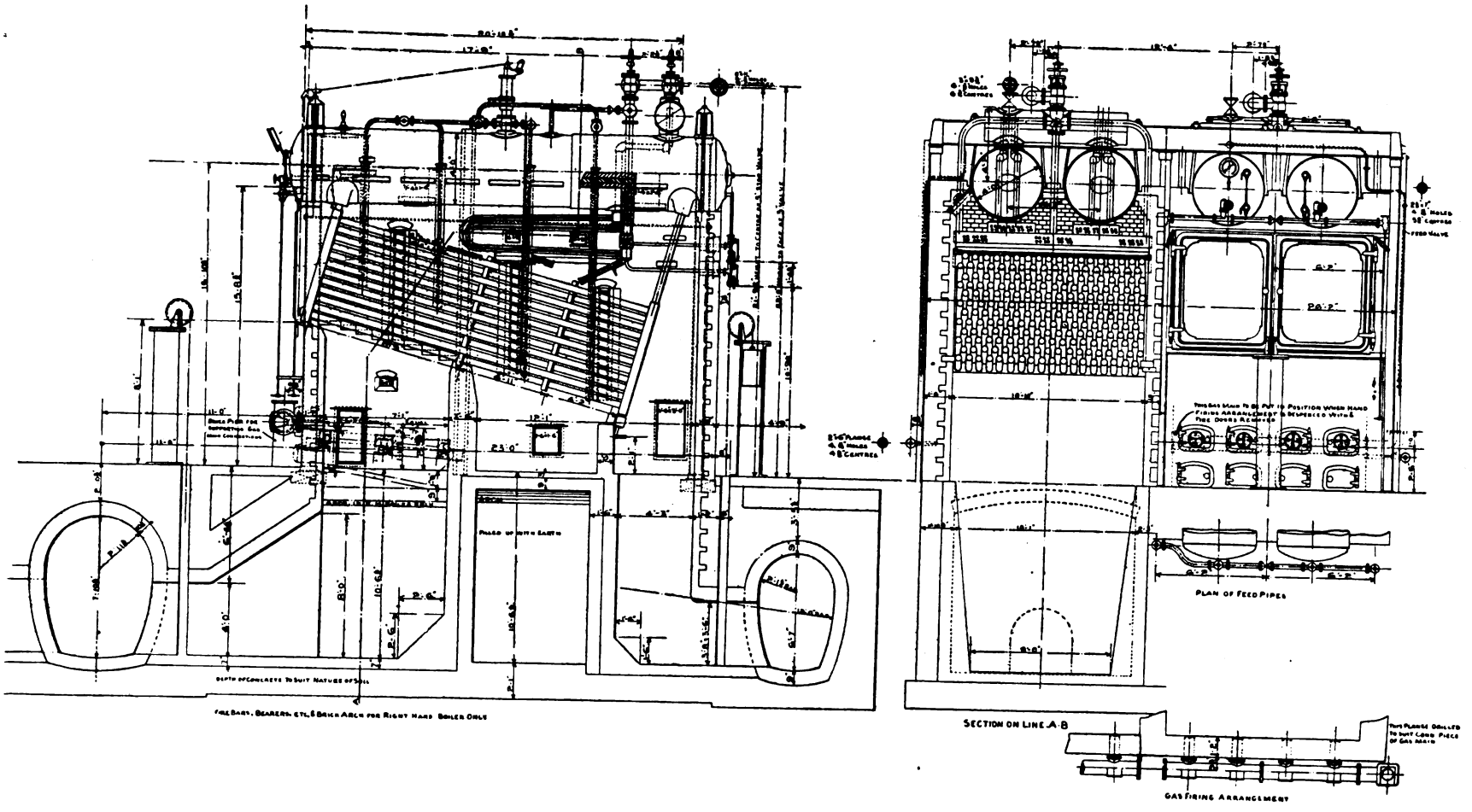

FIGS. 1398 AND 1399.—BABCOCK-WILCOX WATER TUBE BOILER.

FIG. 1400.

FIG. 1401.

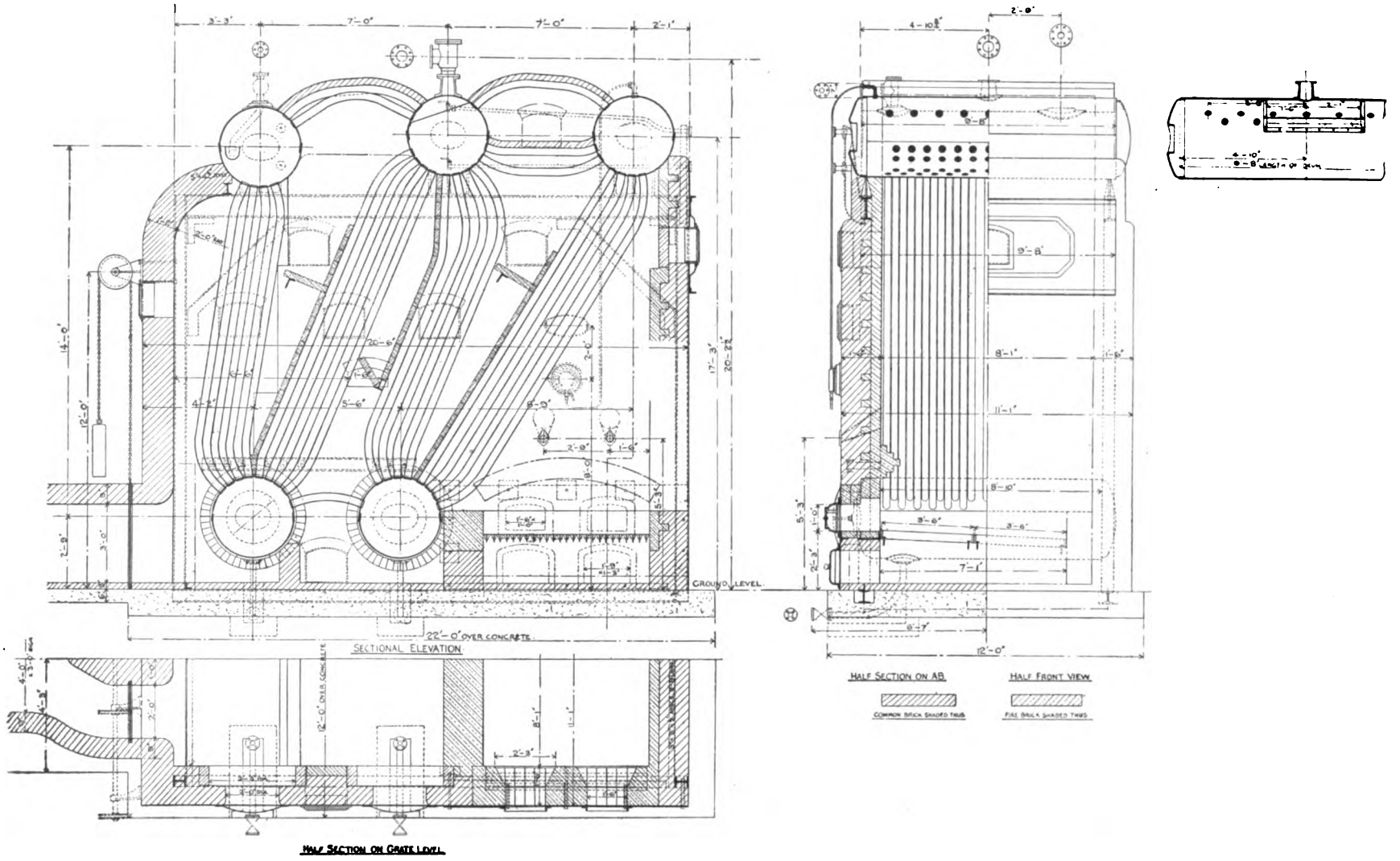

FIGS. 1400 AND 1401.—STIRLING BOILER.

well-known not to need further description, and their construction will readily be seen from the drawing. They may be arranged for either gas firing, in which case pipes for conveying the gas are fitted in front of the fires as shown by the dotted lines, or from coke ovens, in which case the heated gas is conducted by the main flue shown on the left of fig. 1398. The flame passes first over the left hand or highest part of the tubes, where it also meets the steam superheater, and is then deflected downwards, and then upwards through the lowermost portion of the tubes to the return flue. The two drums are connected together by a steam receiver, from the middle of which the steam is taken, being provided with a steam stop-valve at this point. The tubes are expanded into the headers at one side, while the holes on the opposite side are closed by hand-hole plates held in place by forged steel clamps and bolts. These hand-hole covers are removed for cleaning the tubes or refixing new ones.

The "Stirling" water tube boiler is shown in figs. 1400 and 1401, and as will be seen consists of four banks of tubes which connect three upper steam and water drums to two lower water drums. These drums are also cross connected at both the top and bottom by tubes as shown. Each bank of tubes is separated by firebrick facings which deflect the heated gases from the fire, causing them to circulate through the tubes finally leading to the main flue on the left. These boilers are also used in connection with coke ovens with very satisfactory results.

Mechanical stokers are also applied to water tube boilers, and figs. 1402 and 1403 show a "Koker" stoker as applied to a Babcock and Wilcox boiler.

All steam boilers should be fitted with a steam stop valve, two sets of water gauges, two dead weight safety valves, one being a high and low water safety alarm, sludge cock or valve, and a feed valve, and in all cases these should be of the very best make. In Lancashire boilers a "fusible" plug must be screwed into the fire tube immediately over the fire; and this plug should be carefully cleaned and examined each time the boiler is laid off for cleaning.

It is always desirable that the "feed" water should be as hot as possible, one simple method of obtaining this being to pass the water through a number of tubes, in a cylinder which is arranged to receive exhaust steam from the colliery engines at one end, and after passing around the tubes escapes at the other. Another method is to arrange an old boiler, through which the feed water is pumped so that the exhaust steam comes in at one end, and playing on the surface of the water escapes at the other; but this method has the serious disadvantage that oil is deposited on the feed water. It is a simple matter with either of these methods to raise the temperature of the feed water to 212 degs. Fahr. Economisers consist of rows of vertical tubes placed in the flue leading to the chimney, through which all the feed water is pumped. The tubes are provided with scrapers which constantly move up and down to keep the tubes clean.

Steam boilers are now generally constructed from steel plates having a tensile strength of from 27 to 32 tons per square inch. They should be constructed of complete rings bent from a single plate, and riveted only at the joint, which forms the longitudinal seams. This joint may be a double-riveted lap joint, or if for pressures over, say, 60 lb. per square inch, it should be a double-riveted butt-strap joint. The strength of a boiler shell may be determined from the following formulæ, where

P = working pressure in pounds per square inch,
D = internal diameter in inches,
t = thickness of shell plate in inches,
f = safe stress in material in pounds per square inch,
E = efficiency of riveted joint;

then
$$P = \frac{2tfE}{D}$$
$$f = \frac{PD}{2tE}$$
and
$$t = \frac{PD}{2fE}$$

Taking the average tensile strength of the material as 30 tons per square inch, and a factor of safety of 7, then $f = 9{,}600$, so that

$$P = \frac{19{,}200\,tE}{D}$$
and
$$t = \frac{P \times D}{19{,}200\,E}$$

E, efficiency of the joint or ratio of the strength of the joint to the strength of the solid plate, varies with the type of joint adopted, but may be taken as

$$E = \frac{p - d}{p}$$

Where
p = pitch of rivets in inches,
d = diameter of rivets in inches.

The strength of boiler flues of Lancashire and Cornish boilers may be determined from Fairbairn's formulæ:—

$$P = \frac{9{,}675.000\ t^{2\cdot19}}{L\,D}$$

Where
P = collapsing pressure in pounds per square inch,
D = diameter of boiler flue in inches,
L = length of flue in inches,
t = thickness of plate in inches.

The following table gives $t^{2\cdot19}$ for different thicknesses of plate:—

$t =$	$\frac{1}{4}$	$\frac{5}{16}$	$\frac{3}{8}$	$\frac{7}{16}$	$\frac{1}{2}$	$\frac{7}{16}$	$\frac{5}{8}$
$t^{2\cdot19} =$	0·048	0·078	0·117	0·163	0·219	0·28	0·36

FIG. 1402.

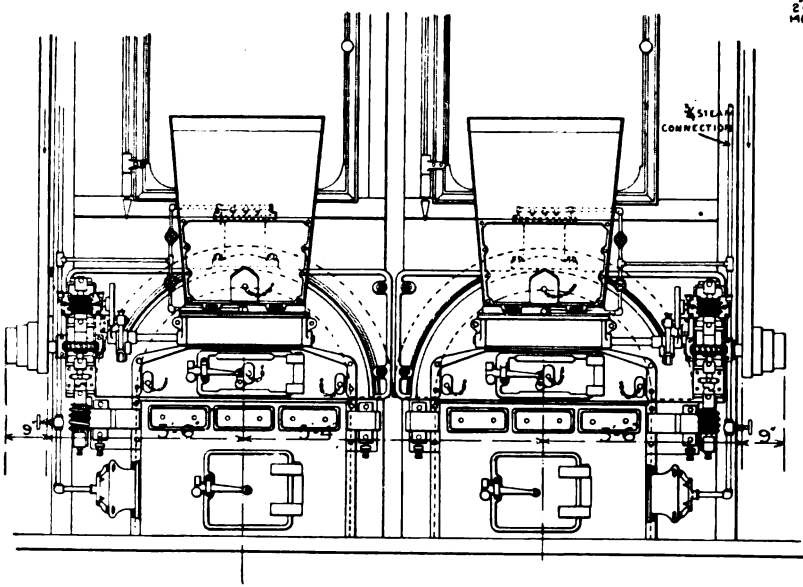

FIG. 1403.

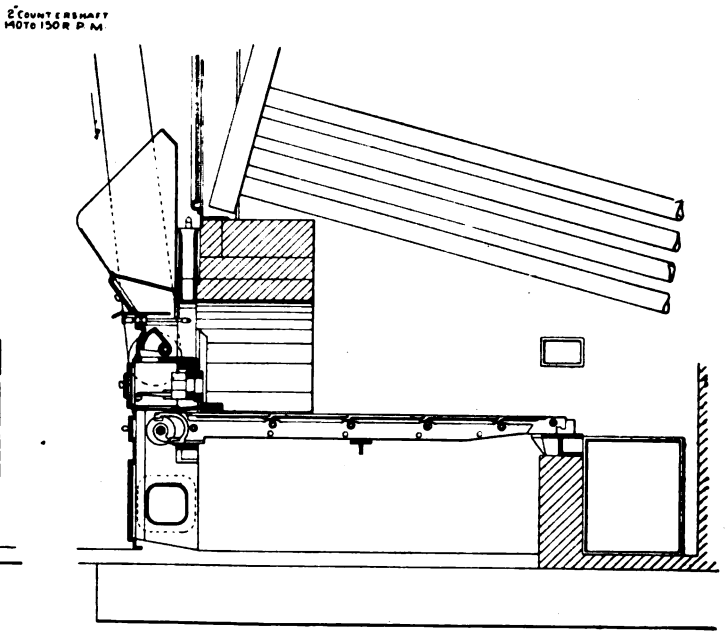

FIGS. 1402 AND 1403.—KOKER STOKER—WATER TUBE BOILER.

Fig. 1404.

Fig. 1405.

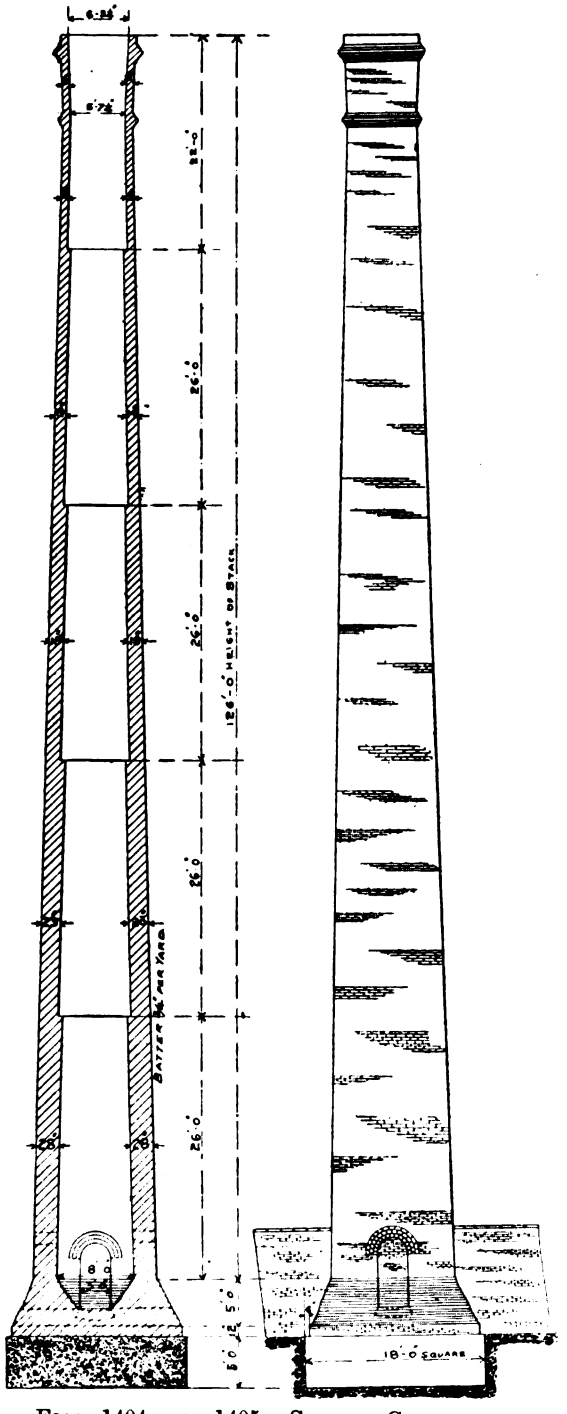

Figs. 1404 and 1405.—Square Chimney.

Fig. 1406.

Fig. 1407.

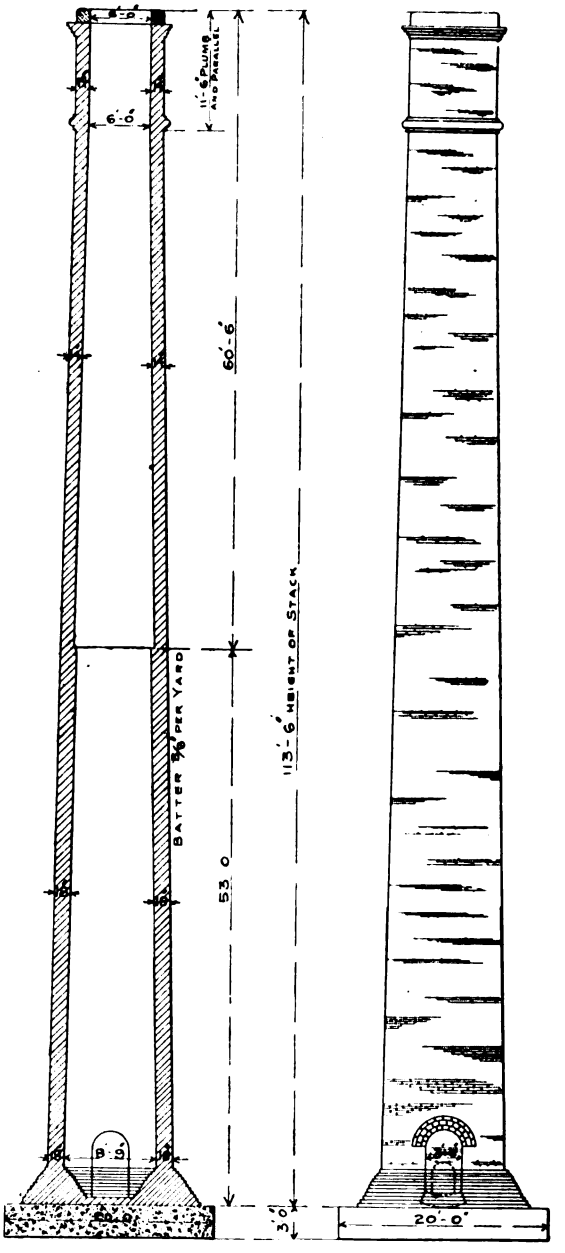

Figs. 1406 and 1407.—Square Chimney.

Mr. Longridge gives the following rule:—

$$\frac{50\ t^2}{D\ \sqrt{L}} - \frac{D}{L}$$

where D = diameter of flue in inches,
L = length in feet,
t = thickness of plate in 32nds of an inch.

Boiler flues are made in short lengths, jointed together sometimes by flanging the rings and placing a stiffening ring between, as in Adamson's joint, the object being to strengthen the tube against collapse. Messrs. Hawksley Wild use two diameters in the tube, one being plain and the other flanged to fit inside the plain one, which make a very strong and reliable tube, as shown in fig. 1386.

Tubes for water-tube boilers should be of solid drawn steel, and not lap-welded.

The dimensions of a chimney depend, so far as height is concerned, very often upon local conditions, as a very high chimney is often merely required to carry away the products of combustion, and not to create a draught. The draught of a chimney depends upon

$$d = H\left(0{\cdot}0146 - \frac{7{\cdot}66}{T}\right)$$

where
d = draught in inches of water-gauge,
H = height of chimney above firegrate level in feet,
T = absolute temperature of gases in chimney.

The best temperature for T is about 1,060 degs. Fahr.—or 600 degs. Fahr. (1,060 − 460) as the temperature of the hot gases in the chimney. The height H necessary to produce any required draught will be

$$H = \frac{d}{\left(0{\cdot}0146 - \frac{7{\cdot}66}{T}\right)}$$

and will depend upon the quality of coal being burned, inferior slack requiring a higher d than good small. From $\frac{3}{4}$ in. to 1 in. water-gauge may be taken as necessary for good results with inferior coal generally used at collieries.

The area of the chimney, however, depends upon the coal consumption and may be determined from

$$A = \frac{Q}{16 \times \sqrt{H}}$$

where A = area at top of chimney in square feet,
Q = pounds of coal consumed per hour,
H = height of chimney in feet above firegrate level.

Figs. 1404 and 1405 and figs. 1406 and 1407 show two chimneys, one 126 ft. high and the other 113 ft., both square and resting upon concrete foundations, which should be designed to limit the pressure due to the weight of the chimney to about 1 ton per square foot. In the former the top portion is only one brick thick,

FIG. 1408. FIG. 1409.

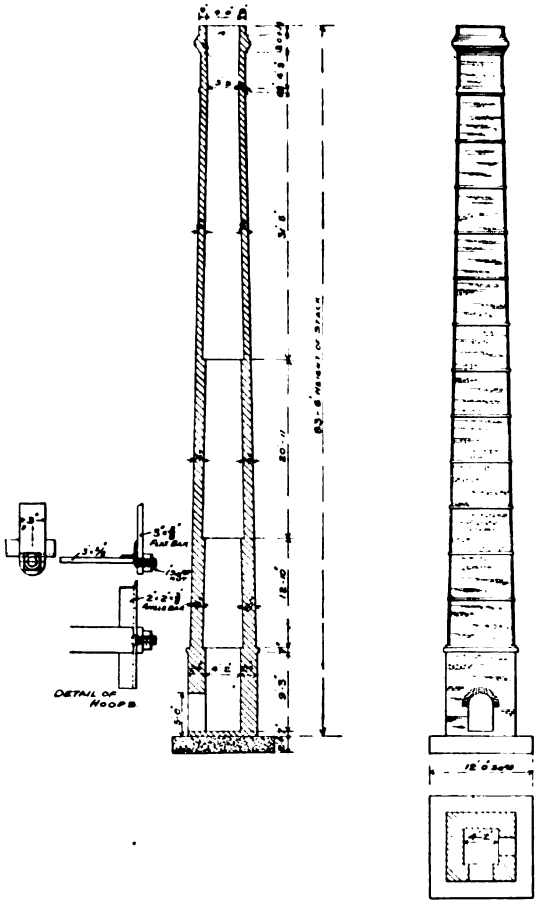

FIGS. 1408 AND 1409.—SQUARE CHIMNEY WITH HOOPS.

while in the latter it is one and a-half bricks thick. As a rule the last 20 to 25 feet may be only one brick thick.

Another square chimney, 83 ft. 6 in. in height, is shown in figs. 1408 and 1409, which also shows the method of hooping square chimneys by means of corner angle irons and flat bars. Figs. 1410 and 1411 show a small square chimney about 47 ft. high. Square chimneys are probably not so good as round ones, though

FIG. 1410. FIG. 1411.

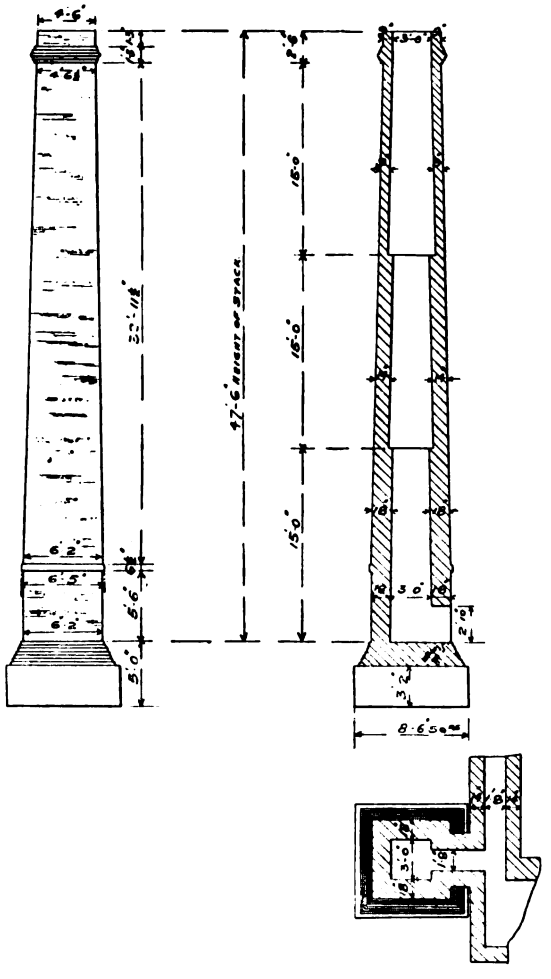

FIGS. 1410 AND 1411.—SQUARE CHIMNEY.

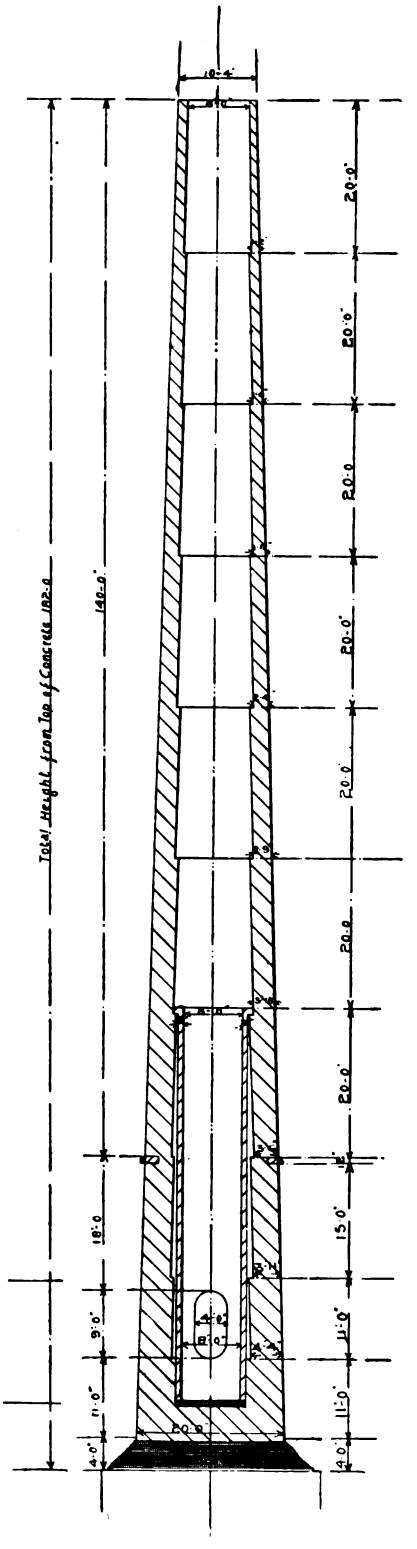

FIG. 1412.—CIRCULAR CHIMNEY.

probably a little easier to build, as round chimneys should be built with properly shaped bricks. Fig. 1412 shows a chimney built by Messrs. Reid, Ferens and Co. of this class, 182 ft. high. It is also provided with a firebrick lining, as to the advantages of which considerable diversity of opinion exists.

Chimneys are built with a batter of about $\frac{1}{4}$ in. per foot, that of the last mentioned high round chimney being the unusual one of $\frac{11}{16}$ in. per foot, or approximately $\frac{1}{3}$ in. per foot.

The size of main flue connecting a range of boilers to a chimney should be large enough to limit the velocity of the gases to about 20 ft. per second. It may be assumed that there will be 600 cubic feet of heated gases delivered to the main flue for every 1 lb. of coal consumed, so that

$$A = \frac{600\ q.}{20}$$

where A = area of main flue in square feet,

q = pounds of coal consumed per second,

and the ratio of the width to the height may vary from 0·4 to 0·6. In practice, however, smaller areas than that given by the above formula are working satisfactorily.

Cast iron steam pipes have given place in recent years to mild steel or wrought iron, and these may now be obtained with solid welded-on flanges and branch pipes. They have great advantages in reliability, strength and lightness. The pipes are usually lap-welded, though solid drawn pipes may be had, the flanges being welded or screwed or rivetted on. Mostly, however, the flanges are of cast steel, screwed on to the pipe, which is afterwards expanded and rivetted over. Expansion joints in long ranges of steam pipes have also given place to bends, one, two or three such being arranged in the range according to its length, and the pipes should be supported upon rollers or hangers to allow them to move freely; and particular attention should be given to means for draining off the condensed water, such as a receiver placed at the lowest point in the range which is connected to a good steam trap.

Owing to the heavy losses due to condensation, to transmit power by steam is most expensive, to say nothing of the trouble experienced in keeping the joints tight, and consequently it is always advisable to place the boilers as close to the main steam engines as possible. Where the power has to be transmitted some distance, electricity or compressed air is now generally employed. For working pumps underground the power is sometimes transmitted by ropes, which answer satisfactorily for small powers, and where it is not desired to incur any great initial expense, though rope-driving cannot compare in economy with either electricity or compressed air.

To transmit power by electricity, the energy in the steam is converted through a steam engine and a dynamo into electrical energy, which is then transmitted through wires to the electro-motor, where it does useful work, and the economy of the system lies in the high efficiencies of the electrical machines themselves and the small loss in the transmission cables against that of either steam or compressed air pipes.

As the terms used in electrical measurements differ from those used in mechanical or steam measurements, it is necessary to understand their relations to each other. The " indicated " horse-power of an engine is determined from

$$\text{I.H.P.} = \frac{2\,P\,L\,A\,N}{33{,}000} \qquad (1)$$

where

P = the mean pressure acting on the piston as measured on an indicator diagram,
L = length of stroke in feet,
A = area of piston in square inches,
N = number of revolutions per minute,

and the " brake " horse-power is the actual power given at the crank shaft of the engine, and is always less than the " indicated " horse-power by an amount equal to the frictional resistances of the engine itself. It is usually determined by means of a " brake " applied to the flywheel or to a pulley fixed to the crank shaft, in such a manner that the pull due to the friction of the " brake " can be measured in pounds on a spring balance. Then

$$\text{B.H.P.} = \frac{6{\cdot}28\,p\,d\,n}{33{,}000} \qquad (2)$$

where

p = pull in pounds on spring balance,
d = distance in feet from centre of crank shaft to centre of spring balance,
n = number of revolutions per minute, and the mechanical efficiency,

$$\text{M.E.} = \frac{\text{B.H.P.}}{\text{I.H.P.}} \qquad (3)$$

It will be noticed with regard to the B.H.P. the dimensions of the engine are not considered, but of course it is evident that a larger cylinder would balance a heavier pull on the spring balance than a smaller cylinder with the same steam pressure, and that in both I.H.P. and B.H.P. the result is affected by the number of revolutions; and it is further important to note that " horse-power " is merely a term used to indicate the *rate* of doing work, and not the *size* of the engine, as a small high-speed engine may be capable of giving a much higher " horse-power " than a large slow-speed one. The terms for electrical measurements are as follow :—

Pressure, voltage, or *electromotive force* is the force driving the electrical energy, and is the potential difference between the *positive* and *negative* terminals of the generator.

Volt.—The volt is the *unit* of pressure, and is similar to pounds per square inch, only the *area is not considered.*

Ampère.—The ampère is the *unit of current* passing through a substance, and is similar to gallons of water passing along a pipe.

Ohm.—The ohm is the *unit of resistance*, and may be likened to friction of water in a pipe, and in a like manner if the area of the wire be increased, the *resistance* is reduced.

An *ampère-hour* means a current of 1 ampère passing for one hour. Thus 2 ampères passing for one hour would equal two ampère-hours, or half an ampère passing for four hours would also equal two ampère-hours.

A *megohm* is 1,000,000 ohms, and a *microhm* is one-millionth part of an ohm.

The *volt-ampère* or *watt* is the unit of power, and is found by multiplying the volts and ampères together. Thus 5 ampères at a pressure of 200 volts would be equal to 1,000 watts.

A *kilowatt* is equal to 1,000 watts, so that the foregoing example would be exactly 1 kilowatt. This term is frequently expressed—though erroneously—as a unit.

A *Board of Trade electrical unit* is the rate of doing work, and is equal to 1,000 watts or 1 kilowatt for one hour. Thus a current of 50 ampères passing through a motor at a voltage of 600 would equal 30 kilowatts, and if the motor ran for five hours the number of *units* of electrical current consumed would equal 150. If

$$\begin{aligned} \text{B.T.U.} &= \text{Board of Trade unit,} \\ \text{C} &= \text{current in ampères,} \\ \text{E} &= \text{pressure in volts,} \\ \text{W} &= \text{watts} = \text{EC,} \\ \text{K} &= \text{killowatts} = 1000\ \text{W,} \\ \text{T} &= \text{time in hours,} \end{aligned}$$

Then
$$\text{B.T.U.} = \text{KT} = \frac{\text{CET}}{1{,}000} = \frac{\text{WT}}{1{,}000}. \qquad (4)$$

Further, as 746 *watts* equal 1-horse power,

$$\text{H}_{\text{E}}\text{P} = \frac{\text{EC}}{746} = \frac{\text{W}}{746} \qquad (5)$$

or introducing the resistance: let

$$\text{R} = \text{resistance in ohms;}$$

then as
$$\text{W} = \text{E} \times \text{C} = \text{C}^2 \times \text{R} = \text{E}^2 \times \text{R} \qquad (6)$$

$$\text{H.P.} = \frac{\text{EC}}{746} = \frac{\text{C}^2\text{R}}{746} = \frac{\text{E}^2\text{R}}{746} \qquad (7)$$

but the "brake" H.P. of a motor can only be determined from formula (2). The mechanical efficiency may be determined from (3), taking $\text{H}_{\text{E}}\text{P}$ in place of I.H.P.

The *output* of a dynamo or the *input* of a motor is usually expressed in kilowatts; thus a motor receiving a current of 200 ampères at 500 volts would have an input of

$$K = \frac{200 \times 500}{1{,}000} = 100 \text{ kilowatts},$$

and if working at *full load* for ten hours would give in Board of Trade units

$$\text{B.T.U.} = 100 \times 8 = 800 \text{ units};$$

and supposing the cost of the current to be 0·3d. per unit. the total cost for the eight hours would be

$$\text{Cost} = \frac{800 \times 0{\cdot}3}{12} = 20\text{s}.$$

The question of cost of generating electric current is very largely influenced by the length of time the machine is working at its full load, termed the *load-factor*. Thus suppose generating plant be put down for 500-horse power or 373 kilowatts. If the generator can be kept fully loaded for twenty-four hours per day, it is working at its full-load factor; but if it is only working for eight hours per day the load factor becomes only one-third, and though the running costs will be proportionately decreased the interest on capital remains the same, and it is this item which affects the cost. Consequently it is always desirable to keep an electric generating plant as fully loaded as possible.

Ohm's Law.—The electric current, voltage and resistance are definitely related by the following formulæ, due to Dr. Ohm:—

$$E = CR;\ C = \frac{E}{R};\ R = \frac{E}{C} \qquad (8)$$

thus, any two quantities being known, the third can always be found.

Electric generators or dynamos are either (*a*) continuous-current machines or (*b*) "alternating"-current machines or "alternators," which may be either "single phase," "two-phase," or "three-phase" alternators. All dynamos, however, generate an "alternating" current, but in the former it is collected at the *commutator* and made to move in one direction, and the voltage or pressure and quantity of current at the terminals of the machine remains constant. In alternators, however, the current is collected upon plain rings, and each "phase" rises from zero to a maximum in both pressure and current, twice in every revolution. Single phase and two-phase machines are seldom used, as neither are so suitable for general power purposes as three-phase, and it is very questionable if three-phase current has any advantages over continuous current for general colliery purposes, except in cases where current has to be transmitted long distances and high pressures may be used.

A direct current generator consists of an armature revolving in a magnetic field, the current being collected on a commutator carried on the armature shaft.

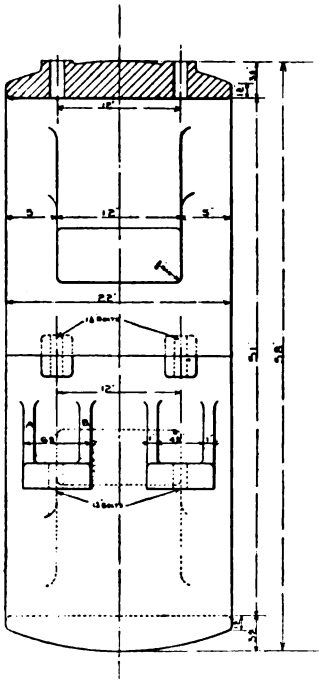

FIG. 1413.

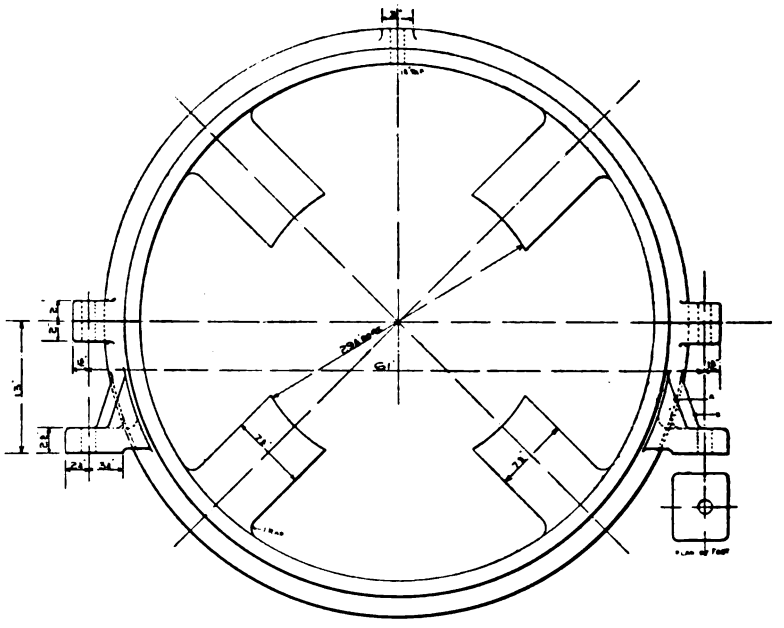

FIG. 1414.

FIGS. 1413 AND 1414.—FIELD MAGNET OF D.C. DYNAMO.

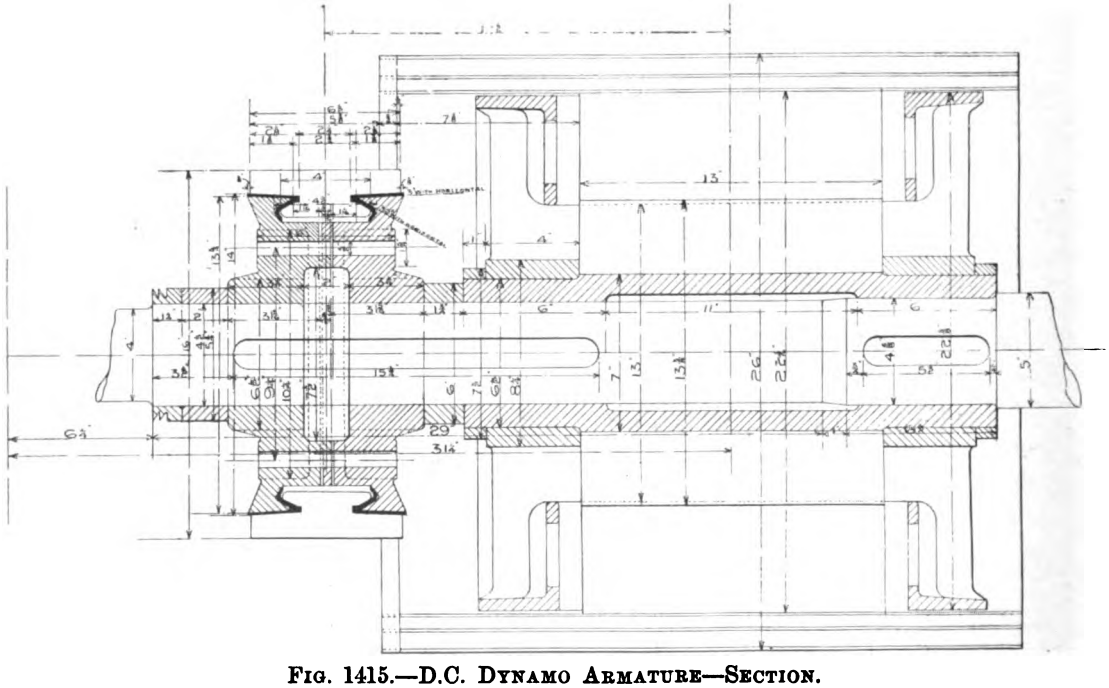

FIG. 1415.—D.C. DYNAMO ARMATURE—SECTION.

The field magnet consists of a casting having projections, or "poles," as shown in figs. 1413 and 1414, which show a "four pole" magnetic field for a 100 kw. generator. On each "pole" is fixed a bobbin, usually termed "magnet coils," upon which a great number of turns of insulated wire is wound, and which magnetise or "excite" the poles on a current of electricity being passed through them, and which cause a magnetic field. The coils are pushed over the end of the "pole piece" and held in place by two pins, screwed into the pole-piece. They are further prevented in some cases from coming off by a slotted ring which fits inside the pole pieces, the metal being cut away between them except at the two ends.

A section through the armature and commutator is shown in fig. 1415, the latter being separately constructed and independently driven by the feather in the shaft, a short distance-piece separating it from the armature sleeve as shown. The commutator consists of two castings accurately machined at the outer circumference to a cone shape, and which are held together by bolts passing through them, with the commutator bars between, insulated with specially-constructed "micanite" rings, as shown by the thick line. Each bar is of copper, drawn to such a section that when put together they will exactly form a true circle of the required diameter—in this case 16 in.—with a thin piece of pure mica about $\frac{1}{32}$ of an inch thick between. The armature consists of a cast iron sleeve mounted upon the shaft, which carries two end plates or rings, between which is compressed a very great number of thin sheet iron plates, and held in place by through bolts, and the nuts on the ends of the sleeve. These plates project above the end rings, and are slotted longitudinally, somewhat similar to the teeth on a wheel, and in these slots are fitted the copper conductors carefully insulated from the iron plates. These conductors are joined together at one end, and at the other are joined to the commutator sections or "bars," as shown. The whole is then mounted upon the shaft, which is screwed at the commutator end, and two nuts keep the whole in place against the shoulder at the other end. It will be noticed the outer nut has two sharp ridges, which are for the purpose of throwing off any oil that may creep along from the bearing, the hood of the pedestal overhanging the oil thrower for this purpose. The arrangement as assembled is shown in figs. 1416 and 1417, for mounting upon a combination engine bedplate. The armature shaft is provided with a solid coupling which is connected to the engine flywheel, while a detail of the split bearing with the phosphor bronze bush (in dotted lines) is shown in figs. 1418 and 1419.

Another machine is shown in figs. 1420 and 1421, which differs from the previous one in constructional details. It is a six-pole dynamo for coupling direct to a steam engine, but instead of the armature revolving inside a ring, separate "tips" are fixed to the poles as shown in fig. 1420, which also shows the magnet coils or

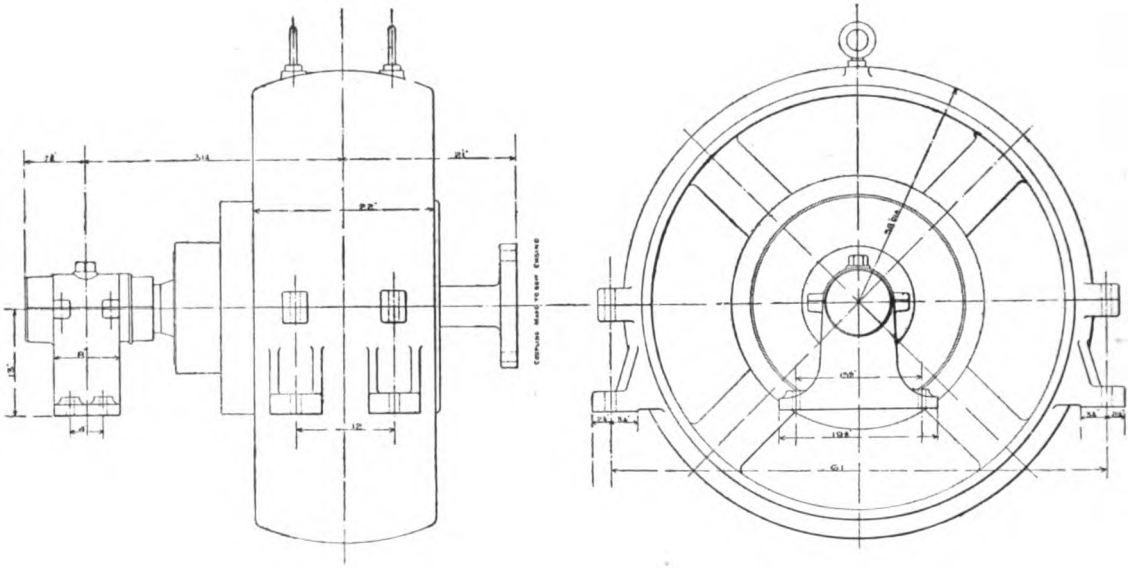

FIG. 1416. FIG. 1417.

FIGS. 1416 AND 1417.—D.C. DYNAMO FOR COMBINATION ENGINE BEDPLATE.

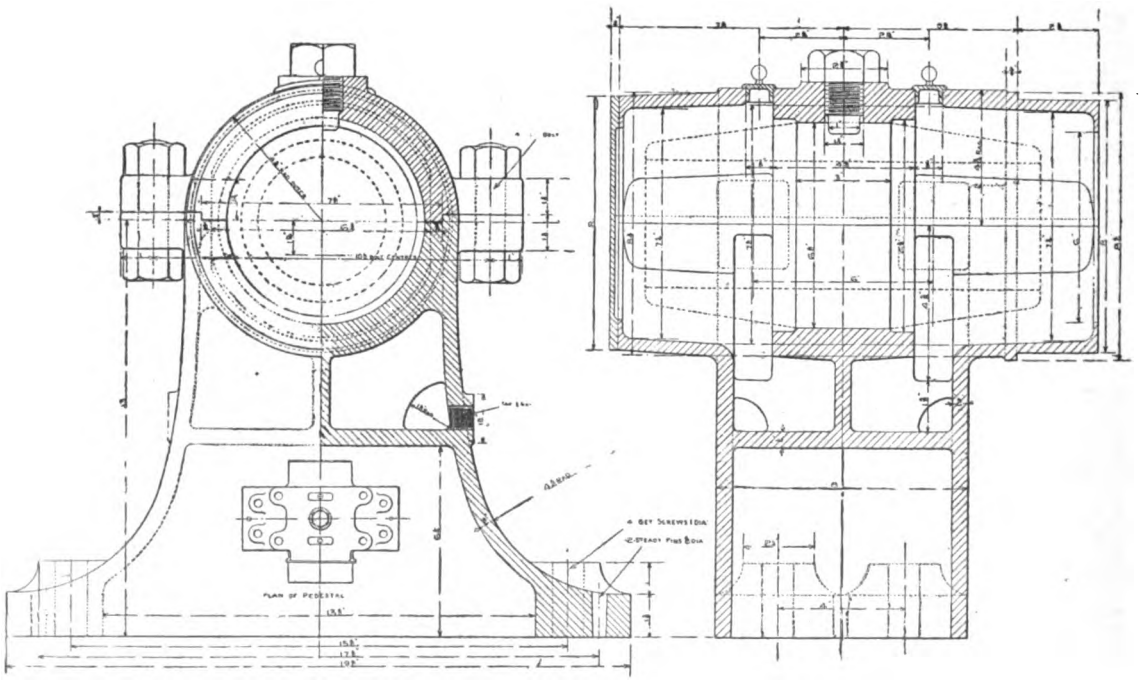

FIG. 1418. FIG. 1419.

FIGS. 1418 AND 1419.—SPLIT SELF-OILING BEARING FOR DYNAMO.

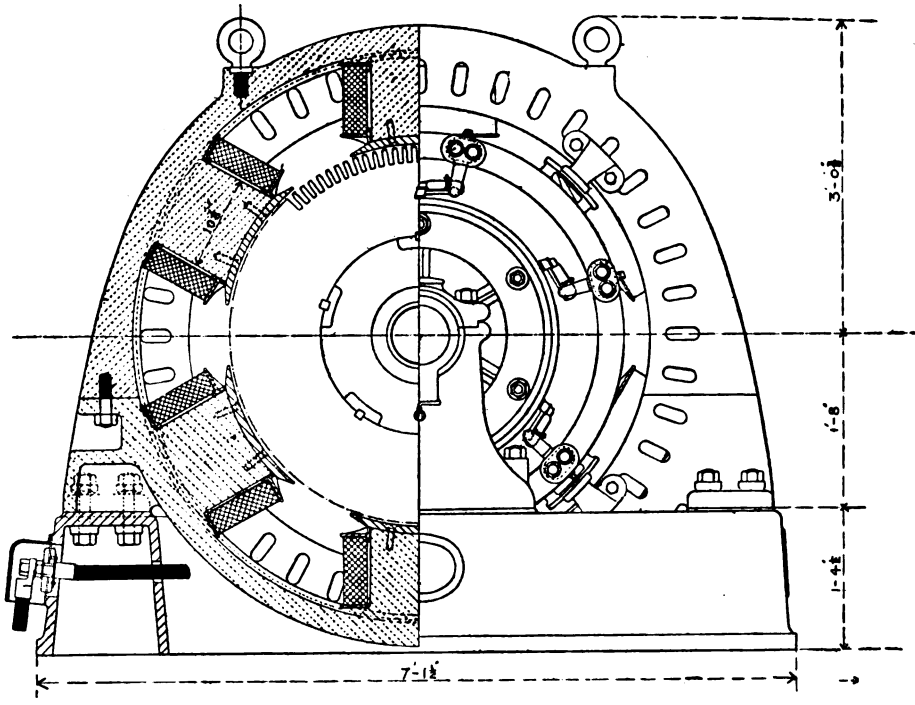

FIG. 1420.

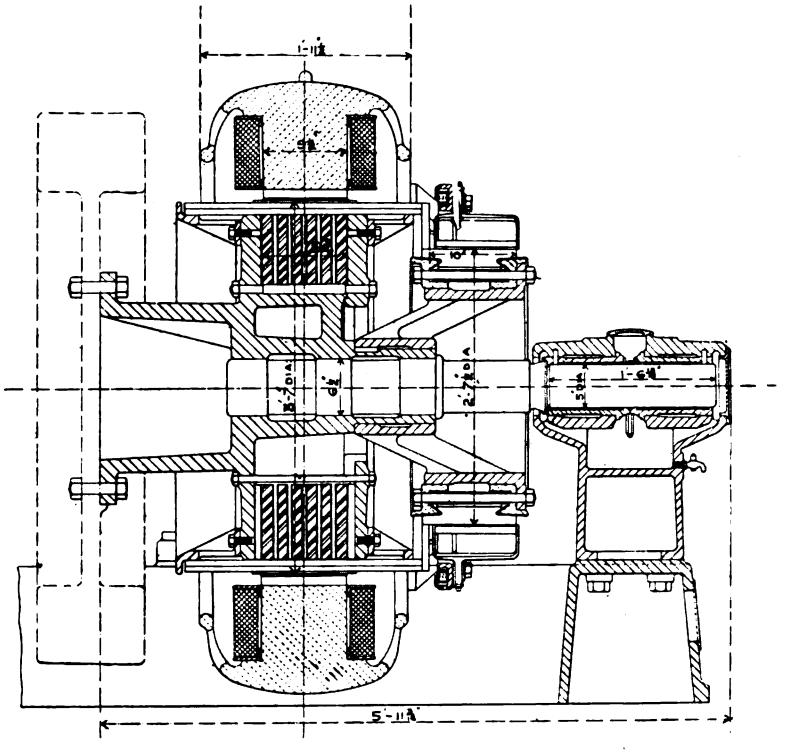

FIG. 1421.

FIGS. 1420 AND 1421.—D.C. SIX POLE DYNAMO.

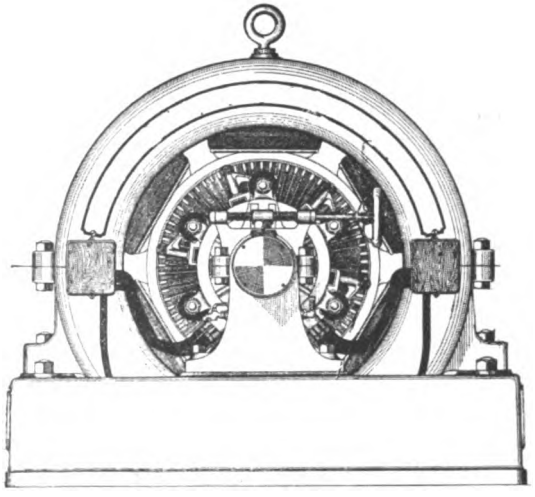

FIG. 1422.

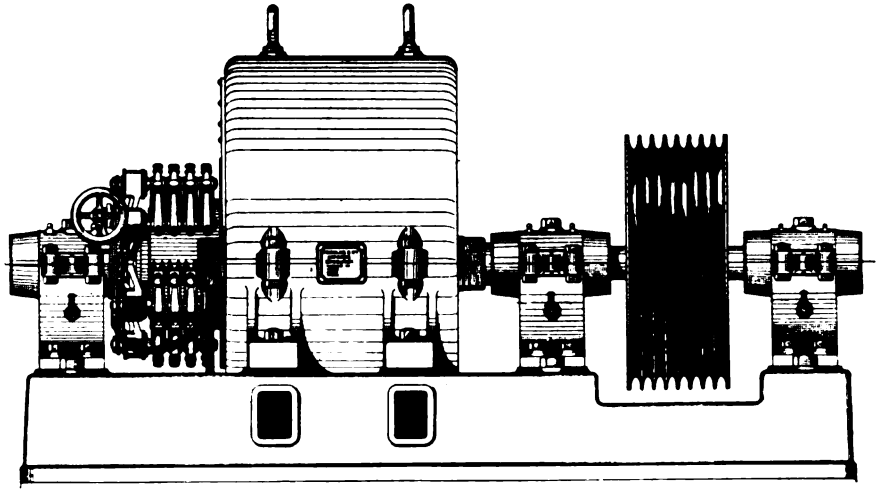

FIG. 1423.

FIGS. 1422 AND 1423.—ROPE-DRIVEN GENERATOR OR MOTOR.

bobbins previously mentioned. The armature is built up on a separate casting or "spider," one end being extended and is bolted direct to the engine flywheel, while a short shaft secured at the centre supports the other end in the bearing, which is provided with a bush of cast iron lined with white metal. Only one oil ring is provided, which is not enough for a long bearing like this. The commutator is also built up separately and keyed to the spider, the boss being joined to the outer ring by six arms. Spaces or "ventilating ducts" are left between the core plates as shown, so that air may circulate through the commutator casting into the interior of the spider, and through the core ducts, in order to keep the armature cool.

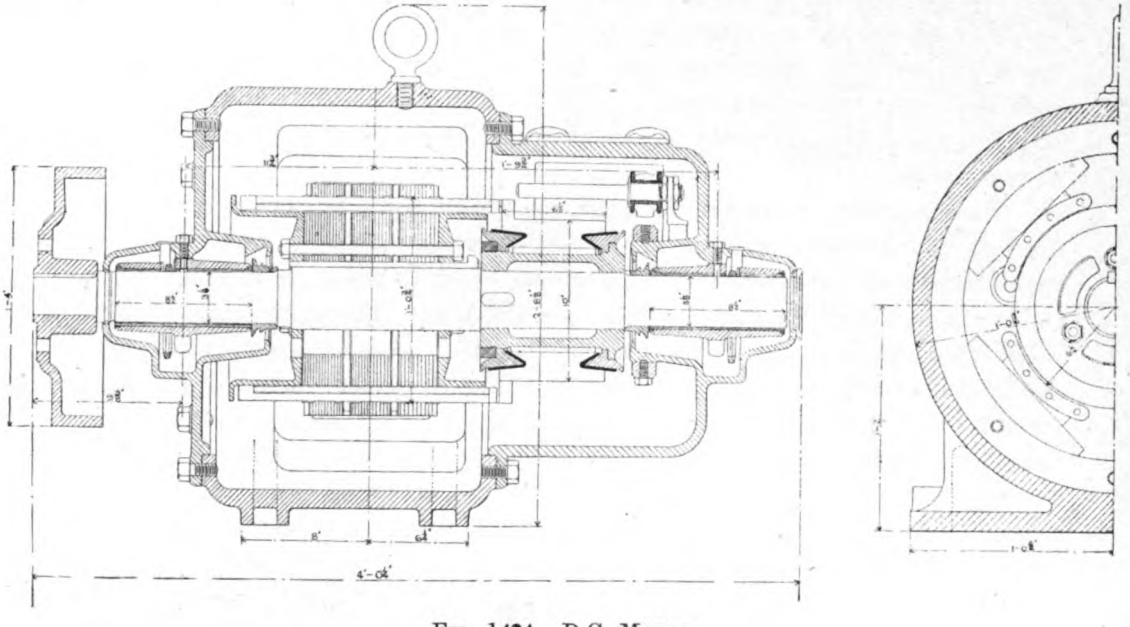

FIG. 1424.—D.C. MOTOR.

A rope-driven six-pole dynamo is shown in figs. 1422 and 1423. A sectional drawing of a direct-current motor is shown in fig. 1424, from which it will be seen the construction is similar, so far as the armature and commutator is concerned, the only difference being in the magnet casing, which is extended to form a cylinder, to the ends of which covers are fitted which contain the end bearings. Covers are usually fitted to the commutator hood to enable the brushes to be adjusted.

The action, briefly explained, of a dynamo is as follows:—The magnet poles produce a "magnetic field,"—that is, the magnetic lines of force occupy the space between the poles in which the armature revolves; and the copper conductors

rapidly revolving in this field, or "cutting the lines of force," have generated in them an electromotive force, which gives rise to an electric current, which flows through the conductors and is collected at the commutator. The electomotive force depends upon the speed or "rate" at which these "lines" are cut, and the strength or intensity of the field. If the armature revolves slowly in a weak magnetic field a small electromotive force will be generated, which may be increased either by increasing the speed of rotation, strengthening the field, or both. The current, however, depends upon the electromotive force and "resistance," or by Ohm's law,

$$C = \frac{E}{R}$$

and consequently should anything occur in the external circuit of a dynamo to suddenly reduce the resistance R, such a large current may be so suddenly produced and so much heat generated, that the insulation would be destroyed and even the copper bars on the armature melted. Such an accident is termed a "burn-out," and was a frequent source of trouble in the early days of electric-motor driving of machinery.

The conductors on the armature are so arranged that each end is connected to opposite commutator bars, and as the current alternates or reverses in the conductor, the commutator bars pass from one brush to the other, thus the current in the external circuit always flows in one direction. The electromotive force or volts depends upon the peripheral speed of the bars; hence for a high voltage and a small diameter armature the speed will be high and *vice versâ*, but whatever the speed for a particular voltage, if the speed be increased the voltage will be proportionately increased, provided the strength of the magnetic field remains the same. The magnetic field is produced by sending a current through the turns of wire upon the field coils, the number of turns of which depend upon the strength of the current. Thus, if the current be large as in a "series" wound dynamo, the number of turns may be few, but if the current be small, as in a "shunt" wound dynamo the number of turns will be many, and should the current vary in strength, the magnetic field, and consequently the "voltage," will vary accordingly.

Figs. 1425 to 1427 show in diagram the connections for a "shunt" wound, "compound" wound, and "series" wound dynamo respectively, each of which has certain advantages depending upon the purpose for which the machine is required. In the first, the whole of the current passes through the field coils to the external circuit, and consequently at constant speed the voltage varies with the current. In the second, the current divides at the brushes of the commutator, a small portion going around the field coils, and the remainder going to the external circuit. In the first the machine cannot be excited until the external circuit is closed, but in the second the machine can be excited and run up to the proper voltage with the external

circuit open, and as a rule the voltage remains for the same speed fairly constant. If, however, the resistance in the external circuit be increased in the "series" machine, less current will pass around the field coils and the voltage will be reduced, whilst with the "shunt" machine the external circuit has little or no effect upon the voltage. It does not, however, remain quite steady, as when the machine is fully loaded there is a slight drop in pressure, owing to the reduction of the terminal pressure due to "armature reaction," "heating," &c., the former being caused by the current flowing through the armature conductors tending to weaken the magnetic field, and the latter increasing the "resistance" in the conductors themselves; and when the load is thrown off, the voltage rises. To keep the terminal voltage constant it is usual to equip a shunt-wound machine with a "shunt rheostat" or "resistance," which consists of a number of coils of fine wire connected together in series and provided with a switch, by means of which the coils may be put in or cut out of circuit with the field coils. By putting in resistance less current is allowed to pass around the field coils, and thus weaken

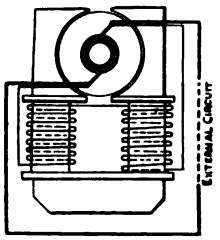

FIG. 1425.—
SHUNT DYNAMO.

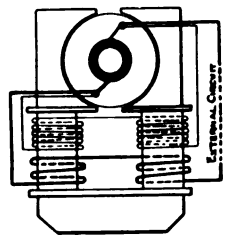

FIG. 1426.—
COMPOUD DYNAMO.

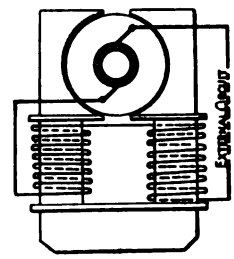

FIG. 1427.
SERIES DYNAMO.

the magnetic field, or by "cutting out" strengthen them, thus lowering or raising the voltage as may be required. The resistance is also useful in regulating the voltage where the speed varies, as when the speed increases the voltage will increase and *vice versâ*.

In order, however, to reduce fluctuations in pressure with varying load, the field coils are wound with both "shunt" and "series" winding, in which all the current to the external circuit also passes through a few coils on the magnet, and thus automatically regulates the voltage. If, for instance, the machine be run with the external circuit open, the voltage, owing to the shunt winding, will remain constant, and, if the load is thrown on, with a "shunt" machine the volts would drop, but the current due to the load passing through the "series" winding prevents this in the "compound" wound machine by strengthening the magnetic field; and as the load increases or decreases so will the 'field," and the voltage will

remain constant at the terminals of the machine. By "over-compounding"—that is, increasing the number of turns on the series coils—the voltage may be made to slightly increase with the load.

Alternators must be separately excited, as alternating current will not magnetise the field magnets; it is necessary, therefore, to provide a small continuous-current generator, which is usually fixed at the end of the alternator shaft, for this purpose. A three-phase alternator generates three separate alternating currents, which are separated from each other in point of time by 120 degs., which rise from zero to a maximum and fall to zero again in one direction, and in like manner in the opposite direction twice in every revolution. This alternation of current is known as the "periodicity" or "cycles," and is usually written $\sim$. There is consequently no steady current or voltage of a certain value, but both are constantly fluctuating quantities, and the formulæ

$$\text{H.P.} = \frac{\text{E C}}{746}$$

is not true for this current, as for all practical purposes a three-phase generator may be likened to three separate single-phase generators, each giving the same current and voltage and each phase is equally loaded. Further, as both fluctuate, it is necessary to take a mean, which is termed the "virtual" volts or "virtual" ampères, and in this case

$$\text{H.P.} = 1{\cdot}732\,\frac{\text{E}_v\text{C}_v}{746} \qquad (9)$$

where E_v = virtual or mean volts per phase,

C_v = virtual or mean current per phase.

By "virtual" volts or ampères is meant the same current and pressure as would be given out by a continuous-current machine; and the virtual volts or ampères of an alternater are 0·707 E, or 0·707 C, where E and C = the *maximum* voltage or current respectively, or the *maximum* current or volts = 1·41 E and 1·41 C respectively, where E and C = the *virtual* volts.

Further, an alternating current always "lags" behind the voltage, which has the effect of reducing the real or effective watts given out by the generator. The current is said to lag behind the volts by an angle of so many degrees, which angle depends upon the nature of the load, and the greater the angle the less the value of the useful current, and the cosine of this angle is termed the "power factor." Thus, if the current and voltage are exactly in phase, the power factor becomes equal to unity, but should the current lag 90 degs. the power factor, and consequently useful effect of the current becomes zero.

Introducing this quantity therefore into the previous equation,

$$\text{H.P.} = 1{\cdot}73\,\frac{\text{E}_v\text{C}_v}{746}\cos.\,\phi, \qquad (10)$$

where ϕ = the angle of lag, the quantity "cos. ϕ" is the "power factor," and is equal to

$$\cos.\ \phi = \frac{\text{real watts}}{\text{apparent watts}} = \text{power factor,} \qquad (11)$$

and the usual lags are 15 to 20 degrees for purely incandescent lighting, 30 degs. for arc lighting, and from 30 to 60 degrees for induction motors, depending upon the size and load, small and unevenly loaded motors being the worst, and a fair average for purposes of estimating will be to take a power factor of 0·8, which is equivalent to a lag of 35 degs. (cos. 35 degs. = 0·819 degs.).

Three-phase generators are wound so that one end of a coil on the armature is fixed to a slip ring, while the other ends are connected to one common or neutral point—which is known as "star" connected—as shown in diagram, fig. 1428; or

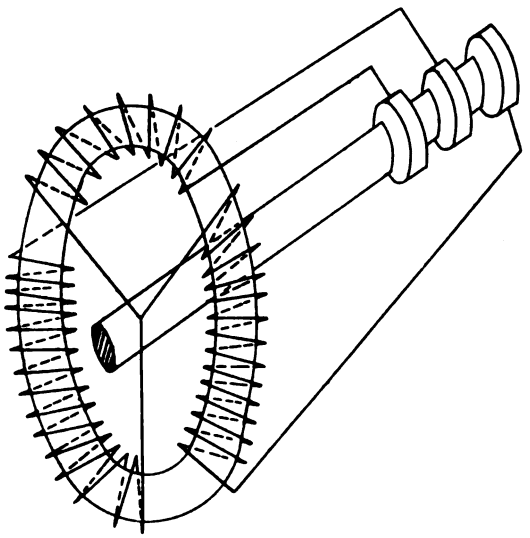

FIG. 1428.—"STAR" CONNECTED THREE-PHASE GENERATOR.

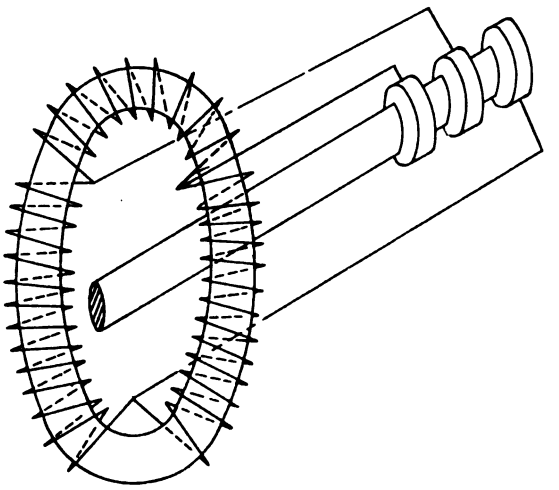

FIG. 1429.—"MESH" CONNECTED THREE-PHASE GENERATOR.

the coils are connected together at their ends, and a junction made to a slip ring at each connection—known as "mesh" connected—as shown in fig. 1429. The effect of the former (and more usual) connection is that whereas the current between any two mains remains the same as the phase current, the "voltage" between any two mains is equal to 1·732 times the phase voltage. With the mesh connection the phase voltage remains the same, but the "current" is equal to 1·732 times the phase current. By phase voltage or current is meant the "virtual" volts or ampères.

For small machines the armature usually revolves, and the general construction does not materially differ from direct-current generators, with the exception that slip rings take the place of the commutator. With large machines, however, the armature forms the stationary portion of the machine, while the field magnets revolve, the poles forming the periphery of a heavy flywheel.

Any continuous-current dynamo may be worked as a motor, and the construction is practically identical in both dynamo and motor, and they are also made "series," "shunt," or "compound" wound, each type having special advantages. On a direct-current motor being supplied with current, which flows both around the field coils and armature, the latter begins to revolve, and in doing so becomes a generator and generates a *counter-electromotive force*, the value of which depends upon the strength of the "field" and the "speed" of the armature. There must, however, be a magnetic field or the armature will not revolve, and should a current be supplied to an armature at rest with the field coils not connected, such a large current would flow as to damage the coils unless protected by safety fuses. The "torque" or turning effort also depends upon the current and strength of the field, and as a series-wound motor has the same current strength flowing through the field coils as through the armature, a large torque is developed. With a "shunt" wound motor the current is divided, a small current only passing through the field coils, and consequently a shunt-wound motor will not develop such a large starting torque as a "series" motor.

Once, however, the motor is started and the speed increases, the back electromotive force generated rises in pressure until nearly equal to the impressed voltage, and the current gradually decreases until the armature is running at full speed. With a shunt motor, if the load increases the speed drops slightly, the back E.M.F. is reduced, and a slightly larger current will flow, but, on the other hand, if the load is reduced, the speed will increase slightly until the current is just enough to overcome the friction of the bearings, and will remain at that speed. With a series motor, however, as the load increases the speed will drop and a larger current will flow through both the field magnets and through the armature, thus strengthening the field, and the speed will thus automatically adjust itself to the load, as if the load be reduced the speed will increase, more back E.M.F. will be generated in the armature, and less current will flow through the field coils, thus weakening the strength of the field, and there is always a danger with this type of machine that if the load be suddenly taken off altogether the speed would go on increasing due to the current getting less and less in the field until the armature would fly to pieces owing to centrifugal force. For this reason it is desirable to always couple this type of motor direct to the machine it is to drive, and not by a belt as the latter might slip off or break

With any type of motor, however, as previously mentioned, if the full voltage of supply be connected to the terminals of a motor at rest, such a large current would flow as to damage the coils, and consequently a machine can only be started up by introducing a resistance in circuit with the armature coils by means of a starting rheostat or switch, which reduces the initial flow of current to a quantity

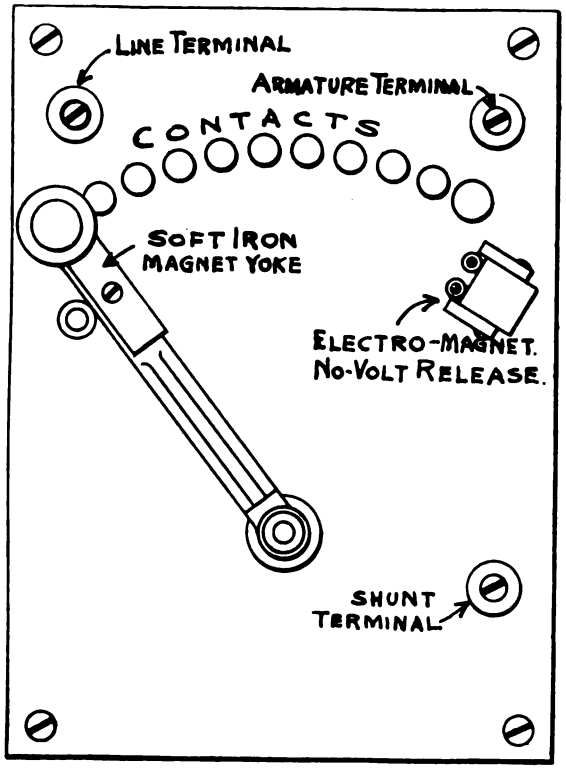

FIG. 1430.—MOTOR STARTER.

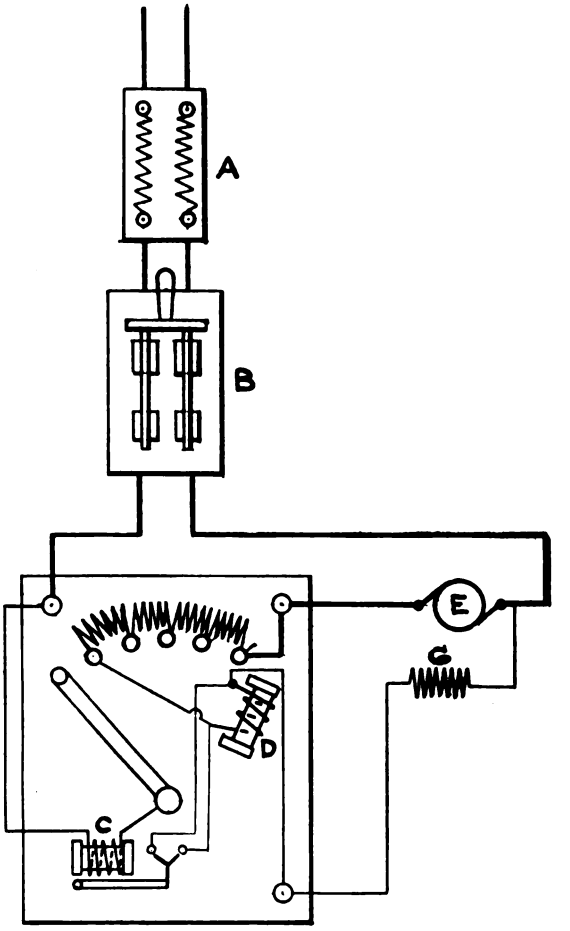

FIG. 1431.—DIAGRAM OF CONNECTIONS FOR D.C. ELECTRIC MOTORS.

which can be carried in the coils of the armature without danger. Such a switch is shown in fig. 1430, while figs. 1431 to 1433 show diagrams of the connections between the mains, starter, and motor for "shunt," "compound," and "series" wound motors respectively. In each case A represents the double pole fuses, B the double pole main switch, C the over-load release, D the no-volt release, E motor

armature, F series field coil, and G the shunt field coil. With the shunt machine it is important to have the shunt coils so connected that when the machine is switched off the shunt coils have always a closed path, as, if the current be suddenly broken, such a high E.M.F. is generated in the coils by the excitation of the field magnets that the insulation of the wires might easily be pierced.

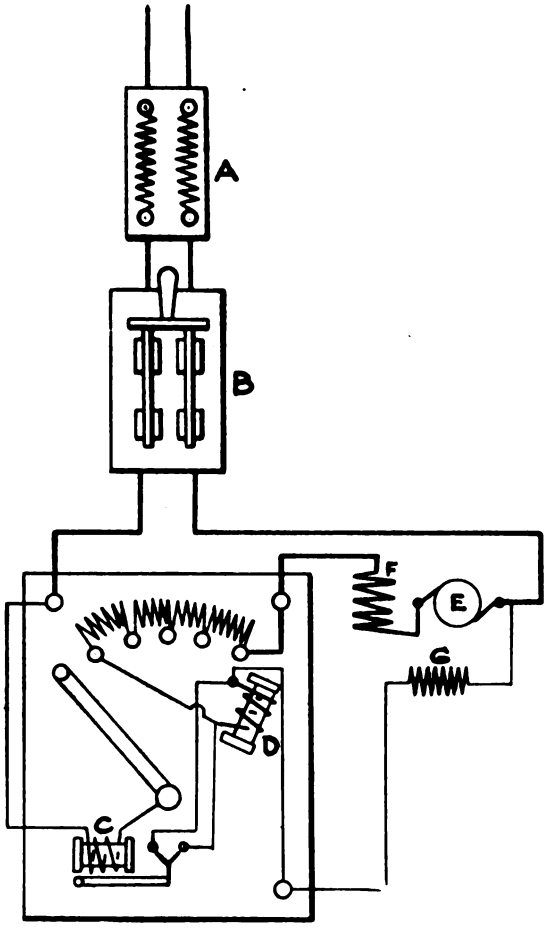

FIG. 1432.

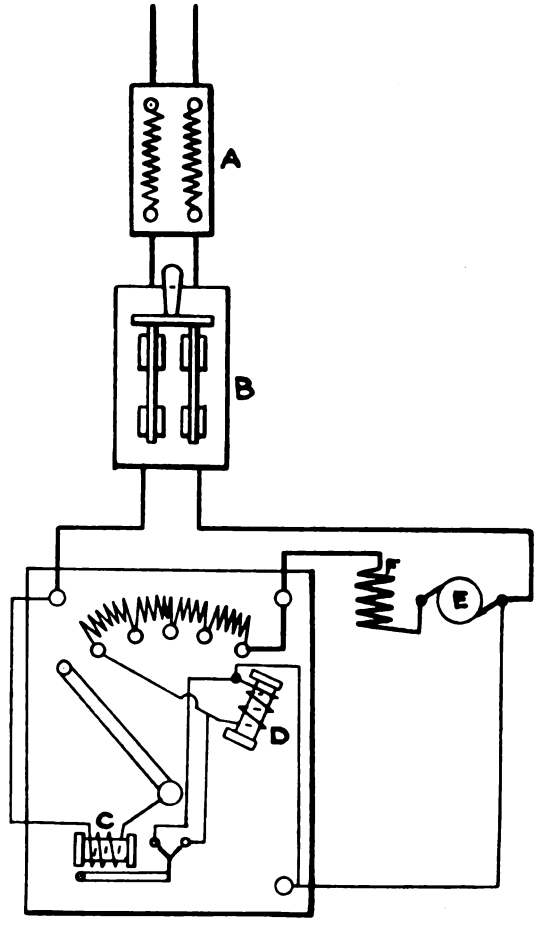

FIG. 1433.

FIGS. 1432 AND 1433.—DIAGRAMS OF CONNECTIONS FOR D.C. ELECTRO-MOTORS.

These starting switches are always provided with a "no-volt release," so that in the event of the circuit being broken the starting handle will, by means of a spring, always fly back to the "off" position, being held over in the running position by a small magnet energised by the current going to the motor, which of

course becomes demagnetised on the circuit being broken and releases the handle. They are also frequently fitted with an "over-load release" which releases the starting handle immediately the load on the motor reduces the speed below a certain limit, and in consequence allows a dangerously heavy current to flow.

Three-phase current motors, however, are differently constructed, and the current, instead of being supplied to an armature with a commutator, is merely supplied to the magnetic field, or as it is termed the "stator," and instead of being made with projecting poles, with a field coil upon each, it is built up of a number of thin soft iron discs held together with end plates forming the exterior casing, and the discs are provided with slots near the inner edge, which are wound with wire coils similar to an armature. The "rotor" which corresponds to the armature of a continuous-current machine also consists of a number of thin iron discs similar to an armature, and is either provided by a number of copper bars, with the ends all connected together by two rings one at each end, or are wound with coils, one end of each terminating at a slip ring. The former is termed a "squirrel cage" rotor, while the latter is termed a "wound" rotor. Figs. 1434 and 1435 show a Holmes-Clayton three-phase motor by Messrs. J. H. Holmes and Co., which shows the rotor shaft supported in self-oiling bearings in the usual way.

The action of the three-phase currents passing through the stator winding is to cause a revolving magnetic field—that is to say, the magnetic field is constantly moving in a circular direction, and *induces* an electromotive force in the stator bars or winding, which gives rise to currents which cause it to revolve at approximately the same speed as the field. The revolving part of the motor, therefore, receives no current from the mains, and only a small electromotive force is set up, though very large currents may flow, while the stator and its windings which receive current is stationary. This fact lends itself to strong mechanical construction, and the stator may be supplied with current at a high voltage—2,000 to 3,000 volts being common. There is, however, the serious disadvantage that speed regulation is practically impossible, and the "squirrel cage" type of motor has a very low starting torque, and it is necessary to start up the motor without any load, which is then coupled up by means of a friction clutch. Further, as the motor is at rest, as soon as the current is switched on to the stator, a very large current flows, which interferes seriously with the rest of the installation, unless the motor forms a very small part of the installation. Electric supply companies sometimes limit the size of this type of motor taking current from their mains to 20-horse power for this reason. To increase the starting torque, it is necessary to introduce resistance into the windings of the rotor, which of course must be arranged with slip rings, and by this means the torque may be raised to about twice the full load torque. As a rule, however, three-phase motors are started light.

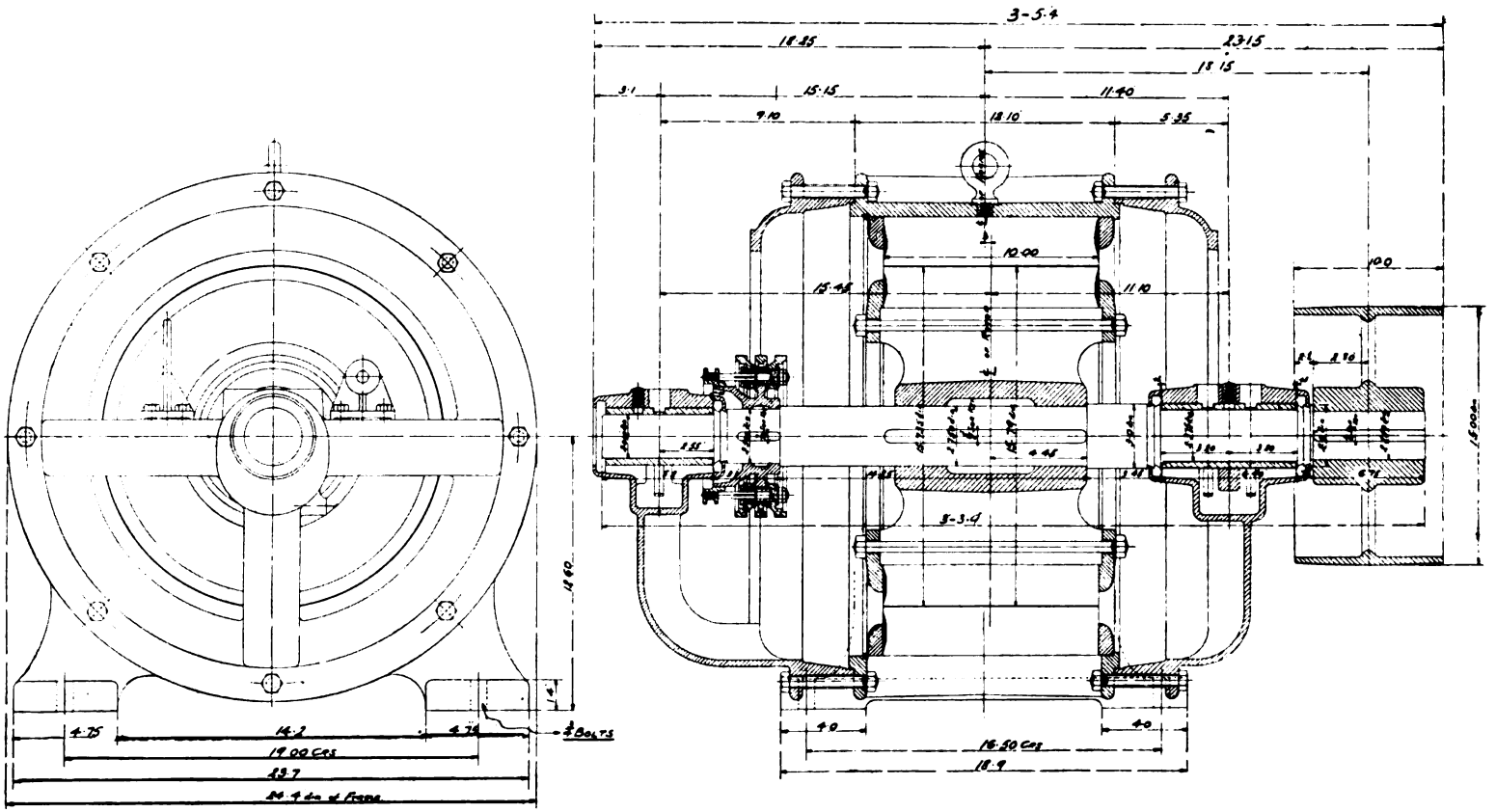

FIG. 1434.

FIG. 1435.

FIGS. 1434 AND 1435.—"HOLMES-CLAYTON" INDUCTION MOTOR. SECTIONAL ARRANGEMENT.

The speed of a three-phase motor depends upon the number of poles and the frequency of the supply. The frequency of a generator depends upon

$$F = \frac{P\,R}{60}$$

where F = the periodicity or frequency per second,
P = number of pairs of poles,
R = revolutions of armature per minute,

and the motor speed may be determined by the same formulæ for no-load. As the load increases, however, what is termed the "slip" also increases and the speed reduces, and as a rule this varies from 3 to 10 per cent. of the full or no-load speed. Even at no-load the speed is less than the maximum, and it is by virtue of this slip that the motor works, the difference in speed allowing the magnetic field created by the stator windings to cut the wires on the rotor, without which no current would be induced, and consequently there would be no force to cause the armature to turn. With any frequency and a given number of pairs of poles the speed would be

$$R = \frac{60\,F\,S}{P\,100}$$

where S is the percentage speed of the motor, and for any speed and given frequency

$$P = \frac{60\,F}{R}$$

The speed once fixed cannot be altered, except by introducing wasteful resistance into the rotor circuit, which, of course, would not be at all suitable for working any length of time. The speed can, however, be altered if the number of active poles can be altered, by a special arrangement of switches, and very economically, thus an eight-pole motor running at a speed of 480 may have four poles cut out, when it will run as a four-pole motor with a speed of approximately 240 revolutions per minute. The speed, however, cannot be varied so easily, or, generally speaking, so economically as with continuous-current motors.

In connection with three-phase currents, transformers are often employed to reduce the high voltage of supply to a suitable one for lighting or for small motors. A transformer consists of a soft iron core, upon which are placed the primary or high-voltage coils, which are coupled to the supply, and the secondary or low-voltage coils consisting of fewer turns of larger section wire, in which the lower voltage but increased current is induced. There is of course a slight loss in the transformatien varying from 3 to 15 per cent. Suppose, for instance, a supply of 100-horse power at a pressure of 3,000 (virtual) volts is to be reduced to a workable one of 500 (virtual) volts, with a loss in transformation of 5 per cent.; 100-horse power at 3,000 volts would be equal to

$$100 \times 746 = 74{,}600 \text{ watts}$$

and $\frac{74,600}{3,000} = 24{\cdot}83$ (virtual) ampères.

and $\frac{74,600}{500} = 149{\cdot}2$ ampères.

the total watts, however, on the low-pressure side would only be

$$\frac{74,600 \times 95}{100} = 70,870 \text{ watts.}$$

and the current

$$\frac{70,870}{500} = 141{\cdot}74 \text{ ampères.}$$

Three-phase transformers may be made up of three combined cores and their respective coils, or may be three separate single-phase transformers, one for each phase.

With continuous-current only two cables are required, while with three-phase current three conductors are necessary. The question of continuous-current *versus* three-phase is one about which considerable diversity of opinion exists; but the author is firmly convinced that for a general colliery supply such as lighting, and the driving of motors for varying classes of work, a 500-volt direct-current supply has many advantages in simplicity and regulation over three-phase.

Cables insulated with rubber are manufactured in grades, according to the insulation resistance given by the thickness of dielectric. The highest class of cable is that termed "association" cable, the second quality being "non-association," which is of course cheaper than the first-named. The question of the size of cable is really influenced by the heating effect, and as a small cable will, owing to the greater ratio of circumference to area, radiate more heat than a larger cable, it may carry a greater proportion of current. It is usual to take 1,000 ampères per square inch as the carrying capacity of cables, but it is evident if a 1 in. diameter wire will carry 785·4 ampères with a ratio of only four times the area for its circumference, then a wire one-sixteenth in diameter, having a ratio of sixty-four times the area to the circumference, may carry a very much proportionately higher current without dangerous heating. For this reason very small cables may be worked at a density of 3,000, larger ones at 2,000, and cables above 0·2 square inch sectional area at 1,000 ampères per square inch. The following table by Messrs. W. T. Glover and Co. Limited, gives the dimensions and carrying capacity of cables as usually manufactured. The column giving the ampères at I.E.E. standard is the carrying capacity as adopted by the Institution of Electrical Engineers, and as will be seen, increases beyond 1,000 ampères per square inch for the smaller sizes, and decreases for the larger sizes

SOLID CONDUCTORS.

Size.	Ampères at 1,000 per square inch. Loss = approximately 2½ volts per 100 yards.	Ampères at I.E.E. standard.	Diameter.	Area.	Standard resistance at 60 degs. Fahr.		Standard weight.	
S.W.G.			In.	Square inches.	Ohms per 1,000 yards.	Ohms per mile.	Pounds per 1,000 yards	Pounds per mile.
22	0·6158	1·7	0·028	0·0006158	39·05	68·72	7·120	12·53
21	0·8042	2·2	0·032	0·0008042	29·90	52·62	9·301	16·37
20	1·0179	2·6	0·036	0·001018	23·62	41·57	11·77	20·72
19	1·2566	3·2	0·040	0·001257	19·13	33·67	14 53	25·58
18	1·8096	4·2	0·048	0·001810	13·28	23·38	20·93	36·83
17	2·4630	5·4	0·056	0·002463	9·762	17·18	28·48	50·12
16	3·2170	6·8	0·064	0·003217	7·478	13·16	37·26	65·47
15	4·0715	8·2	0·072	0·004072	5·904	10 39	47·09	82·87
14	5·0265	9·8	0·080	0·005027	4·784	8·419	58·13	102·3
13	6·6476	12·4	0·092	0·006648	3·617	6·366	76 88	135·3
12	8·4949	15·0	0·104	0·008459	2·831	4·982	98 24	172·9
11	10 568	18 0	0·116	0·01057	2·275	4·004	122·2	215·1
10	12·686	21·0	0·128	0·01287	1·868	3·228	148·8	261·9
9	16·286	27·0	0·144	0·01629	1·476	2·598	188·4	331·5
8	20·106	31·0	0·160	0·02011	1·195	2·104	232·5	409·2
7	24·328	36·0	0·176	0·02433	0·988	1·739	281 3	495·1
6	28·952	42·0	0·192	0·02895	0 830	1·462	334·7	589·1
5	35·298	48·0	0·212	0·03530	0 681	1·199	408·2	718·4
4	42·273	57·0	0·232	0·04227	0·568	1·001	488 8	860·2
3	49·875	64·0	0·252	0·04988	0·482	0·848	576·7	1,015·0
2	59·828	75·0	0·276	0·05083	0·401	0·707	692 0	1,218·0
1	70·685	85·0	0·300	0·07069	0·340	0 598	817·6	1,439·0
1/0	82·447	97·0	0·324	0 08245	0·291	0 513	953·4	1,678·0
2/0	95 114	108·0	0·348	0·09511	0·252	0·445	1,099·0	1,935·0
3/0	108·68	120·0	0·372	0·1087	0·221	0·389	1,257·0	2,212·0
4/0	125·66	135·0	0 400	0·1257	0·191	0·336	1,453·0	2,558·0
5/0	146·57	155·0	0·432	0·1466	0·164	0·288	1,695·0	2,983·0
6/0	169·09	173·0	0·464	0·1691	0·142	0·250	1,955·0	3,441·0
7/0	196·34	196·0	0·500	0 122	0·122	0·215	2,270·0	3,995·0

FLEXIBLE OR STRANDED CONDUCTORS.

Size.	Amperes at 1,000 per square inch. Loss = approximately 2½ volts per 100 yards.	Amperes at I.E.E. standard.	Diameter of each wire.	Diameter of strand.	Effective area—viz., area of solid conductor having same conductivity.	Standard resistance at 60 degs. Fahr.		Standard weight.	
S.W.G.			In.	In.	Square inches.	Ohms per 1,000 yards.	Ohms per mile.	Pounds per 1,000 yards.	Pounds per mile.
3/25	0·931	2·452	0·020	0·043	0·000931	25·82	45·45	11·04	19·42
3/24	1·127	2·868	0·022	0·047	0·001127	21·33	37·55	13·35	23·49
3/23	1·341	3·307	0·024	0·052	0·001341	17·94	31·57	15·89	27·96
3/22	1·825	4·258	0·028	0·060	0·001825	13·18	23·19	21·62	38·05
3/21	2·384	5·301	0·032	0·069	0·002384	10·09	17·75	28·24	49·71
3/20	3·016	6·444	0·036	0·078	0·003016	7·972	14·03	35·75	62·92
3/19	3·725	7·644	0·040	0·086	0·003725	6·455	11·36	44·14	77·68
3/18	5·364	10·31	0·048	0·103	0·005364	4·482	7·88	63·52	111·8
7/25	2·177	4·921	0·020	0·060	0·002177	11·05	19·44	25·70	45·23
7/24	2·633	5·751	0·022	0·066	0·002633	9·131	16·07	31·08	54·71
7/23	3·135	6·636	0·024	0·072	0·003135	7·670	13·50	37·00	65·12
7/22	4·266	8·543	0·028	0·084	0·004266	5·636	9·920	50·36	88·63
7/21	5·571	10·63	0·032	0·096	0·005571	4·316	7·596	65·79	115·8
7/20	7·052	12·90	0·036	0·108	0·007052	3·410	6·001	83·3	146·6
7/19	8·708	15·34	0·040	0·120	0·008708	2·761	4·860	102·8	180·9
7/18	12·54	20·68	0·048	0·144	0·01254	1·918	3·375	148·0	260·5
7/17	17·06	26·62	0·056	0·168	0·01706	1·410	2·480	201·4	354·5
7/16	22·27	33·122	0·064	0·192	0·02227	1·080	1·900	263·2	463·1
7/15	28·22	40·22	0·072	0·216	0·02822	0·8523	1·500	333·1	586·2
7/14	34·83	47·80	0·080	0·240	0·03483	0·6903	1·215	411·1	723·6
7/13	46·05	60·10	0·092	0·276	0·04605	0·5222	0·9190	543·8	957·1
7/12	58·84	73·47	0·104	0·312	0·05884	0·4086	0·7192	694·9	1,223·0
7/11	73·22	87·90	0·116	0·348	0·07322	0·3284	0·5780	864·8	1,522·0
7/10	89·17	103·3	0·128	0·384	0·08917	0·2687	0·4746	1,053·0	1,853·0
7/9	112·9	125·4	0·144	0·432	0·1129	0·2131	0·3750	1,332·4	2,345·0
7/8	139·3	149·0	0·160	0·480	0·1393	0·1726	0·3037	1,644·3	2,894·0
7/6	200·6	200·9	0·192	0·576	0·2006	0·1199	0·2110	2,367·6	4,167·0
19/22	11·57	19·36	0·028	0·140	0·01157	2·079	3·659	136·8	240·8
19/21	15·10	24·09	0·032	0·160	0·01510	1·592	2·802	178·7	314·6
19/20	19·12	29·23	0·036	0·180	0·01912	1·257	2·213	226·3	398·3
19/19	23·60	34·74	0·040	0·200	0·02360	1·019	1·793	279·4	491·7
19/18	33·99	46·85	0·048	0·240	0·03399	0·7074	1·245	402·2	707·9
19/17	46·27	60·33	0·056	0·280	0·04627	0·5197	0·9147	547·3	963·3
19/16	60·39	75·06	0·064	0·320	0·06039	0·3981	0·7007	714·8	1,258·0
19/15	76·50	91·12	0·072	0·360	0·07650	0·3143	0·5532	905·1	1,593·0
19/14	94·42	108·3	0·080	0·400	0·09442	0·2547	0·4482	1,117·0	1,966·0
19/13	124·9	136·2	0·092	0·460	0·1249	0·1926	0·3389	1,478·0	2,601·0
19/12	159·5	166·4	0·104	0·520	0·1595	0·1507	0·2653	1,888·0	3,323·0
19/11	198·5	199·2	0·116	0·580	0·1985	0·1211	0·2132	2,349·0	4,134·0
19/10	241·7	234·0	0·128	0·640	0·2417	0·0995	0·1751	2,860·0	5,034·0

FLEXIBLE OR STRANDED CONDUCTORS—(*continued*).

Size.	Ampères at 1,000 per square inch. Loss = approximately 2½ volts per 100 yards.	Ampères at I.E.E. standard.	Diameter of each wire.	Diameter of strand.	Effective area—viz., area of solid conductor having same conductivity.	Standard resistance at 60 degs. Fahr.		Standard weight.	
S.W.G.			In.	In.	Square inches.	Ohms per 1,000 yards.	Ohms per mile.	Pounds per 1,000 yards.	Pounds per mile.
37/20	37·22	15·47	0·036	0·252	0·03722	0·6460	1·137	440·8	775·8
37/19	45·96	61·07	0·040	0·280	0·04596	0·5232	0·9208	544·3	957·9
37/18	66·19	80·91	0·048	0·336	0·06619	0·3633	0·6394	783·5	1,379·0
37/17	90·06	104·2	0·056	0·392	0·09006	0·2670	0·4699	1,066·0	1,877·0
37/16	117·6	129·6	0·064	0·448	0·1176	0·2045	0·3599	1,393·0	2,451·0
37/15	148·9	157·3	0·072	0·504	0·1489	0·1615	0·2842	1,763·0	3,103·0
37/14	183·8	187·0	0·080	0·560	0·1838	0·1309	0·2303	2,176·0	3,830·0
37/13	243·1	235·2	0·092	0·644	0·2131	0·0989	0·1741	2,878·0	5,066·0
37/12	310·5	287·4	0·104	0·728	0·3105	0·0774	0·1363	3,678·0	6,474·0
61/18	109·1	121·9	0·048	0·432	0·1091	0·2204	0·3879	1,292·0	2,274·0
61/17	148·5	157·0	0·056	0·504	0·1485	0·1619	0·2850	1,758·0	3,094·0
61/16	193·9	195·4	0·064	0·576	0·1939	0·1240	0·2183	2,296·0	4,042·0
61/15	245·5	237·0	0·072	0·648	0·2455	0·0979	0·1724	2,907·0	5,116·0
61/14	302·9	281·6	0·080	0·720	0·3029	0·0973	0·1397	3,589·0	6,316·0
61/13	400·8	354·3	0·092	0·828	0·4008	0·0600	0·1056	4,746·0	8,353·0
61/12	512·0	433·1	0·104	0·936	0·5120	0·0469	0·08266	6,065·0	10,674·0
91/14	451·9	391·0	0·080	0·880	0·4519	0·0532	0·09364	5,365·0	9,442·0
91/13	597·7	491·7	0·092	1·012	0 5977	0·0402	0·07080	7,080·0	12,462·0
91/12	763·8	600 1	0·104	1·144	0·7638	0·0314	0·05541	9,048·0	15,925·0
91/11	950·4	719·3	0·116	1·276	0·9504	0·0253	0·04453	11,256·0	19,811·0

Similarly the insulation resistance increases with the lessened diameter of the wire, thus a 19/15 cable with an area of 0·07586 square inch in the 600 megohm grade of Association cable would have an insulation resistance of 600 megohms per mile, whereas a 3/25 cable with a sectional area of 0·000924 would have an insulation resistance of 1,250 megohms per mile. There are three grades of insulation, viz. : 300, 600, and 2,500 megohms classes, and no cable below the 600 megohm grade ought to be used with a voltage of 250 and above, while all underground main cables ought to be of the very best quality and 2,500 megohm grade.

Shaft cables should be armoured, and the author prefers to suspend them directly in the shaft by means of the socket, as shown in fig. 1436. Where the depth is too great to allow of one length being suspended in this way, it is suspended

in sections. For this purpose the cable is armoured by means of two or three layers of stout galvanised iron wires, which are secured in the socket as shown. Overhead cables may be bare and carried upon porcelain insulators, but where workmen are likely to come in contact with them they should be fully insulated. Underground conductors should be fully insulated, and well covered with a thick serving of hemp or jute, or other protective covering, but not armoured, and where any mechanical protection is necessary they should be run in strong well-made plain wood boxes. Iron pipes are most unsatisfactory, as moisture gathers on the interior, which in time rots the installation, and is most difficult to repair. All joints should be made with proper strong mechanical water-tight joint boxes, with stuffing boxes and glands for passing cables into the box, and porcelain or marble terminal bases, while the box may be lined out with thick asbestos, and what is most important of all, the boxes should not be cramped in size. There is no difficulty in making joints, even with very large cables, if proper means are taken.

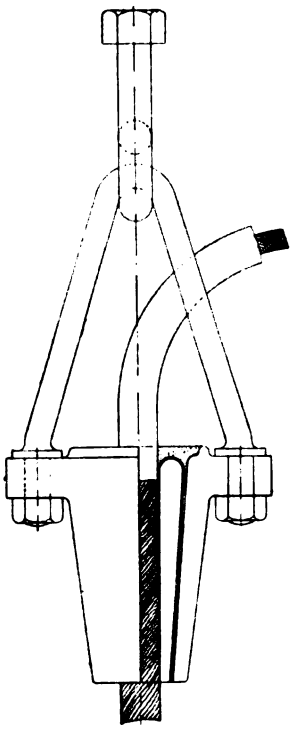

FIG. 1436.—CABLE SUSPENDER.

Switchboards consist of slate or marble panels fixed to an iron framework upon which the instruments and controlling switches are fixed. The positive and negative panels should be separate, and—especially if slate panels are used—the holes through which pass the current-carrying shanks should be carefully bushed with some insulating material. Figs. 1437 and 1438 show instruments as made by Messrs. J. H. Holmes and Co, while fig. 1439 shows different types of the Holmes-Page switch, while a general arrangement of switchboard is shown in fig. 1440. The panels of the board should be designed to—as far as possible—eliminate the interference of one branch or circuit with another.

Electric accumulators or storage batteries are not much used in colliery work. They are for the purpose of storing electrical energy, and consist of glass cells filled with a dilute solution of sulphuric acid, in which is immersed specially prepared lead plates, one being positive and the other negative, which are connected together in series throughout the length of the battery. Each cell has a voltage of about 2 volts to 2½ volts, so that a set of accumulators to supply, say, a 100-volt circuit would require 50 cells, for a 200-volt circuit 100 cells. The capacity of the cell depends upon its dimensions, and is expressed in *ampère-hours*. Thus, a cell

LIBRARY
OF THE
UNIVERSITY
OF

FIG. 1437.—AMMETER.

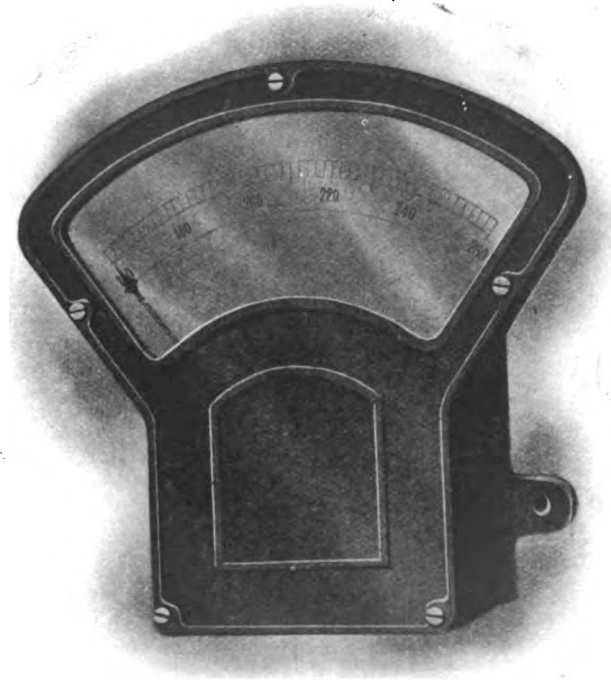

FIG. 1438.—SECTOR INSTRUMENT.

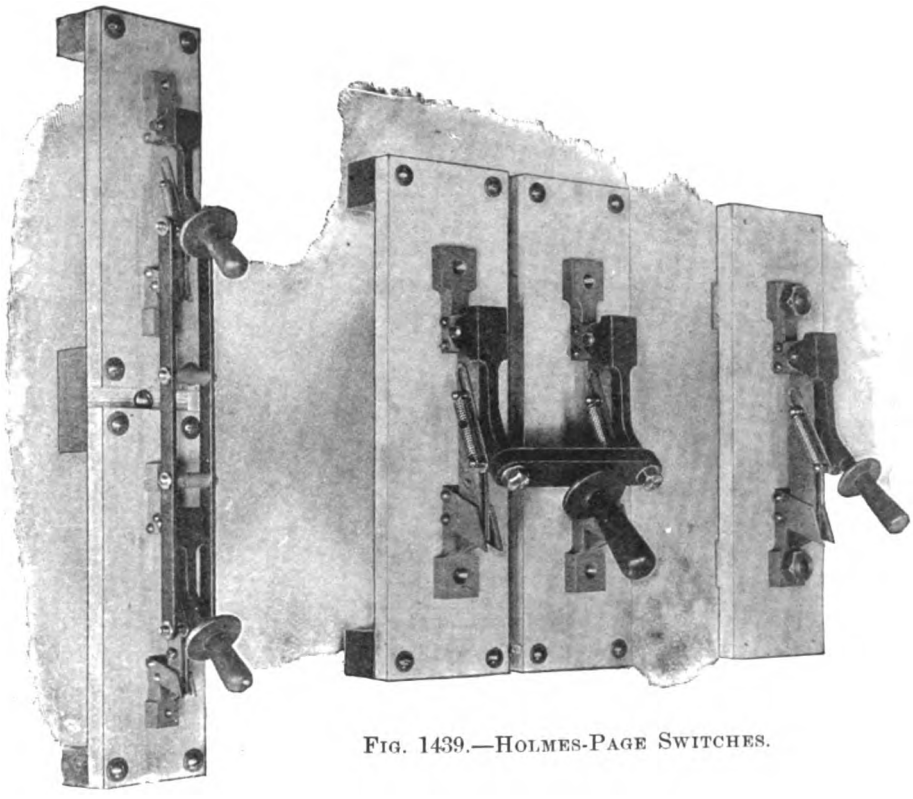

FIG. 1439.—HOLMES-PAGE SWITCHES.

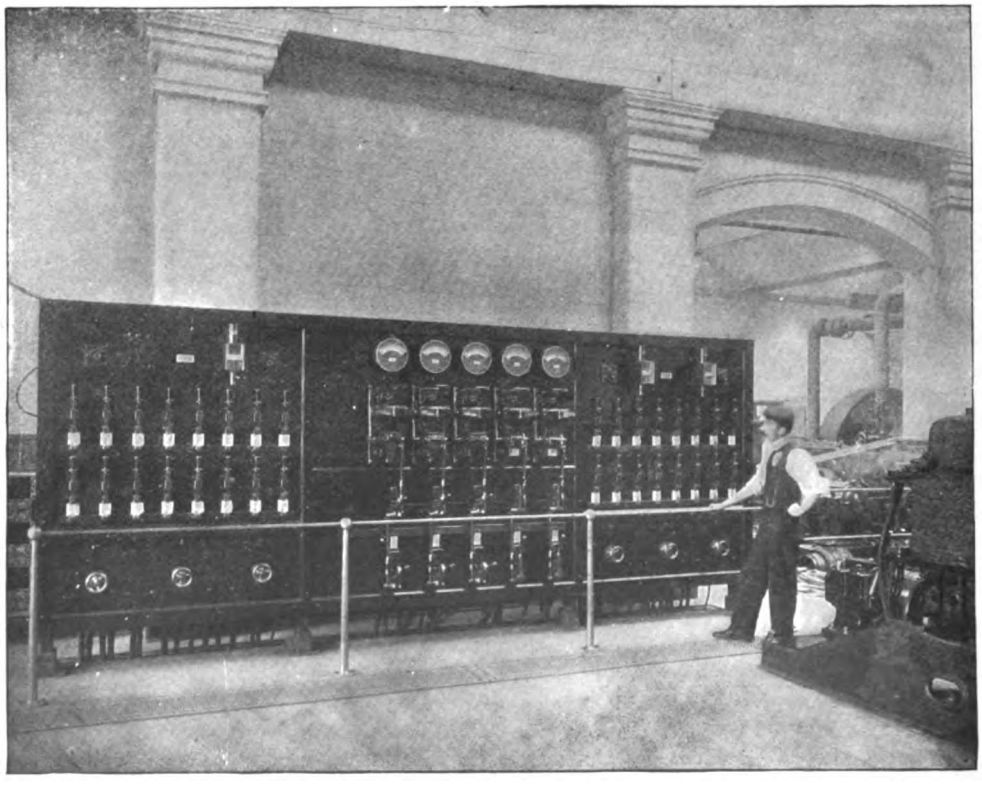

FIG. 1440.—SWITCHBOARD.

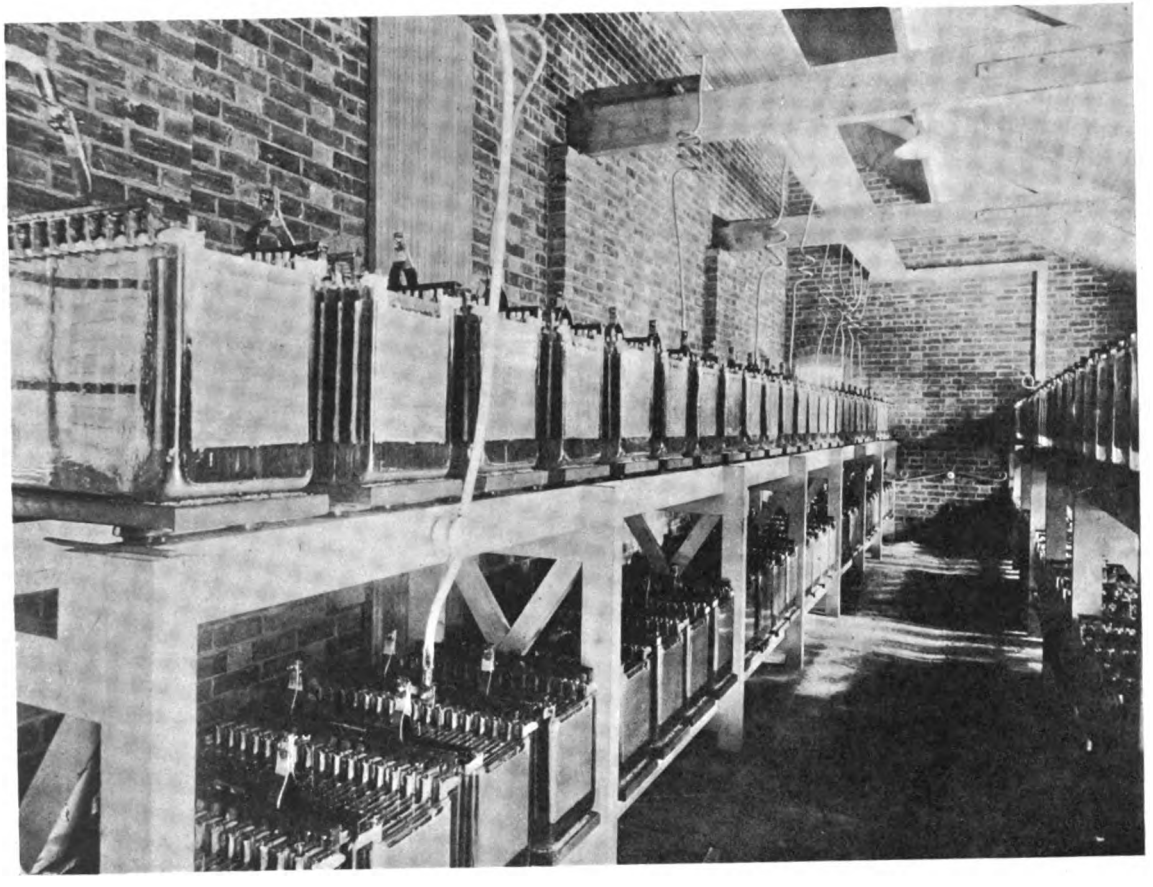

FIG. 1441.—BATTERY ROOM.

with a capacity of 20 ampère-hours, would give a current of 20 ampères for one hour, 10 ampères for 2 hours, or 4 ampères for 5 hours. If 20 ampères at a pressure of 200 volts were required to be given from a battery for one hour, it would have to consist of 100 cells each with a capacity of 20 ampère-hours, and a pressure of 2 volts. Fig. 1441 shows a battery room for a set of accumulators designed by the

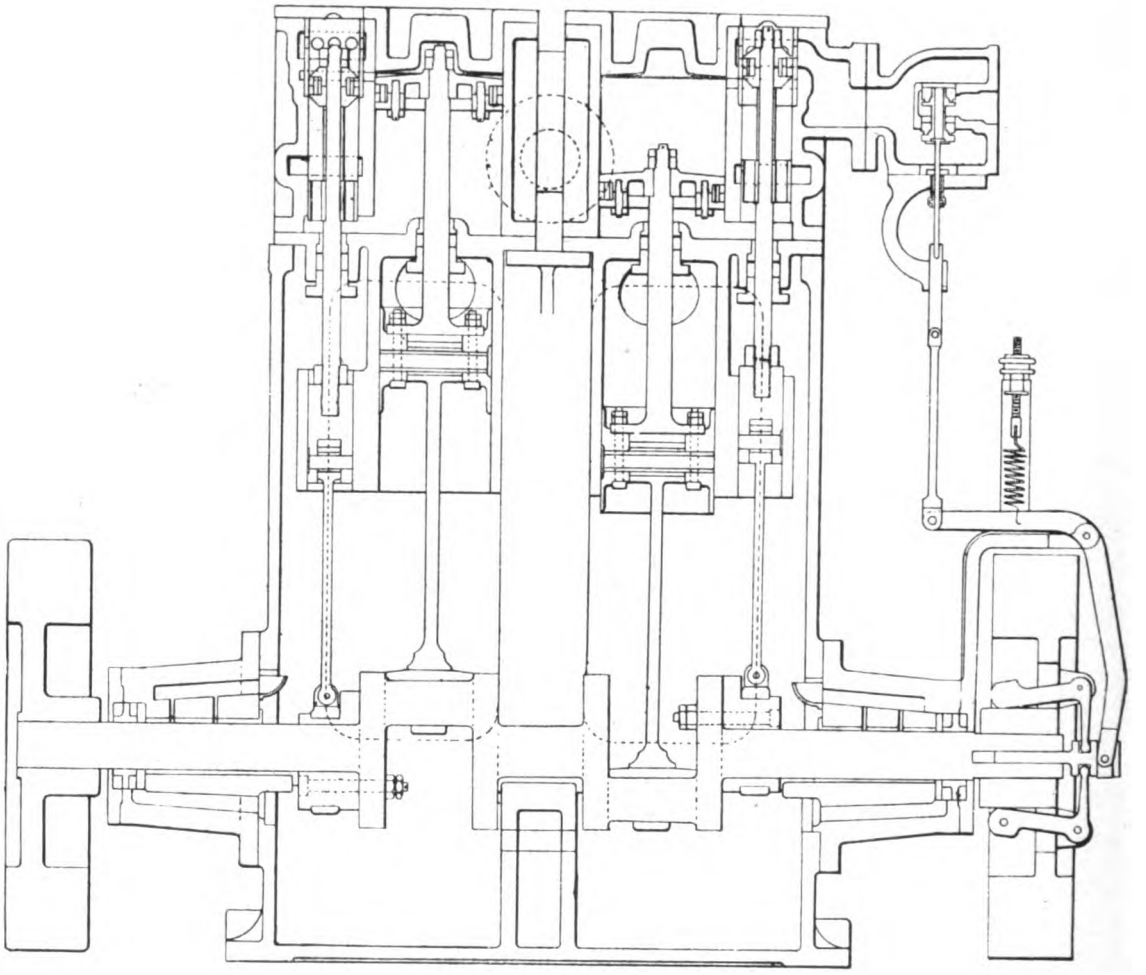

FIG. 1442.—HIGH SPEED SINGLE-ACTING ENGINE.

author to supply a 220-volt circuit. The battery is charged by sending a current through the cells in series by a dynamo, which must supply current at a voltage equal to 2·5 times the number of cells being charged.

The best method of driving electric generators is undoubtedly that of coupling

the dynamo direct to a high-speed engine, working under forced lubrication, and with well-designed large wearing surfaces. The idea that quick-running engines "knock themselves all to pieces" is all nonsense, and it is absurd to expend considerable capital on expensive foundations, engine-houses, and heavy massive engines and ropes, when a small high-speed plant of the same capacity will only occupy the space required for the cylinder of the large engine alone. Further a number of units all of the same size and make, with spare parts interchangeable, is to be preferred to one large engine and dynamo.

There are several types of high-speed engines, two of which are shown in figs.

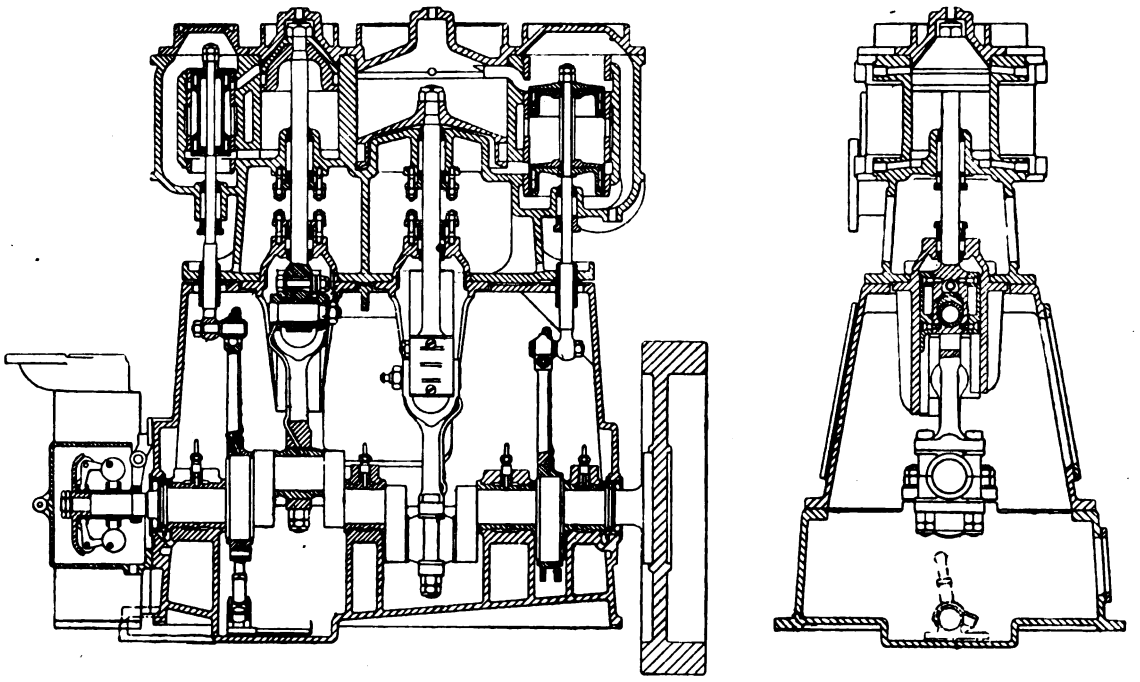

FIG. 1443.—HIGH-SPEED DOUBLE-ACTING ENGINE.

1442 and 1443. The former is only single-acting, and has "splash" lubrication, while the latter is a double-acting "compound" engine with "forced" lubrication, the pump for which will be seen under the high-pressure cylinder eccentric sheave, by which it is driven.

A good example of a high-speed electrical generating plant for power purposes is shown in fig. 1444, which is taken from a photograph of a large 580-i.h.p. triple-expansion engine by Messrs. W. H. Allen, Son and Co. Limited, coupled direct to a 375-kw. continuous-current dynamo by the British Westinghouse Co., to run at

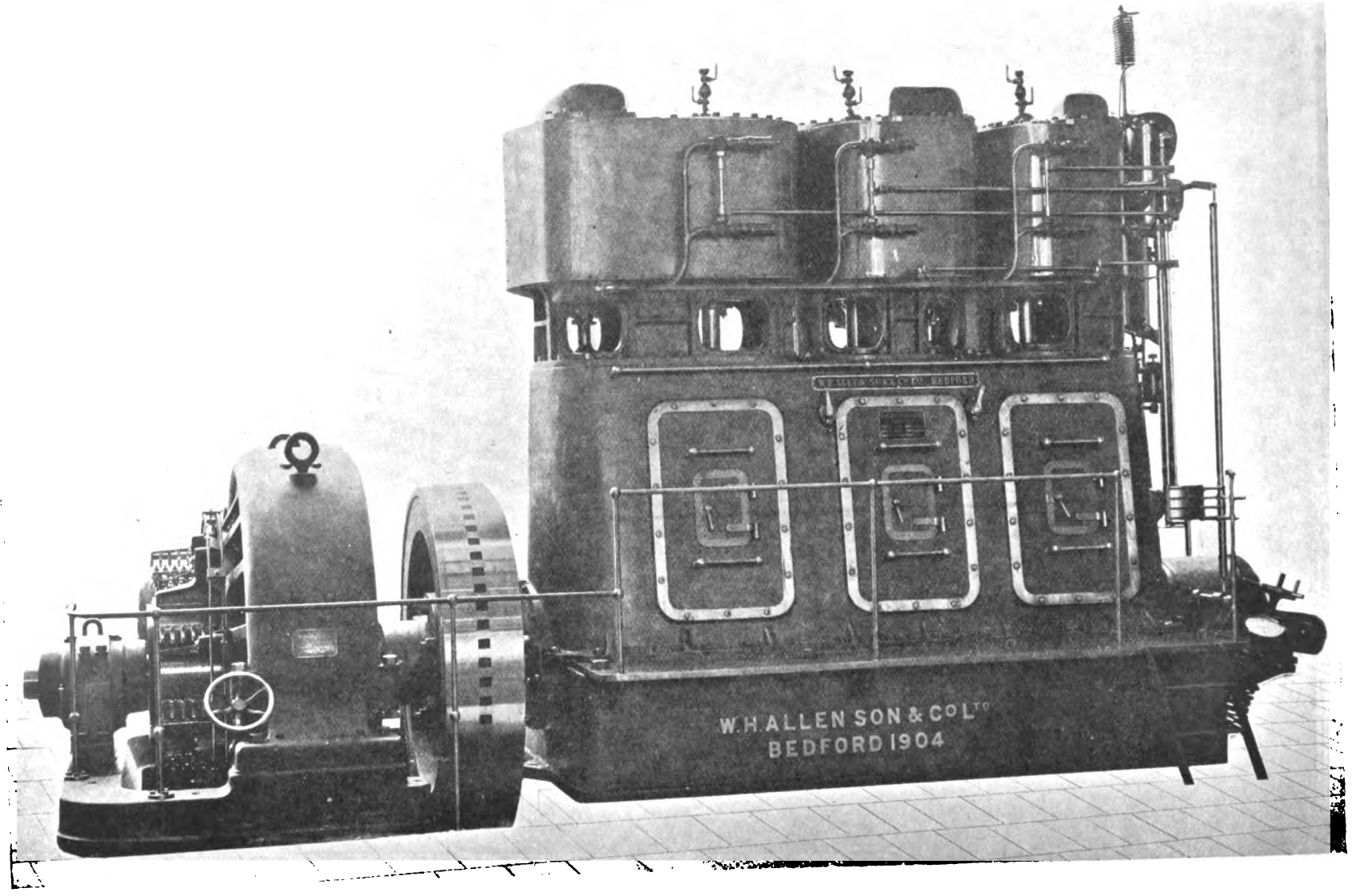

Fig. 1444.—Allen Westinghouse Steam Dynamo.

325 revolutions per minute. The engine is of the three-cylinder, double-acting, triple-expansion, vertical enclosed type, the cylinders driving three cranks set at angles of 120 degs., and has been designed throughout with a view to obtaining economical results over widely varying conditions of load, when working with dry saturated steam at 150 lb. per square inch at the stop-valve, and exhausting against a maximum absolute pressure of 4 in. of mercury, and to be further capable of developing an overload of 25 per cent. for a period of two hours.

The dimensions of the cylinders and the successive points of cut-off are so arranged as to produce an equal distribution of power between the three cylinders, thereby ensuring an exceedingly even turning-moment throughout the revolution of the engine. The weights of the reciprocating parts on each crank are also equalised in order to eliminate the resultant vertical and horizontal forces due to the inertia of the moving parts. The three cylinders are respectively 13 in. and 20 in. and 30 in. diameter, and have a stroke of 13 in., and are made of a special mixture of hard and tough close-grained cast iron, and are provided with the usual accessories in the way of drains, relief valves, and provision for indicating.

The lubricating oil is supplied at a pressure of about 15 lb. per square inch to all the working parts by means of a small valveless force-pump, driven from one of the eccentrics of the engine.

The engine is governed by a crank-shaft type governor which can be regulated by hand whilst the engine is running to give a speed variation of at least 5 per cent. above and below the normal, and operates a compound double-beat valve of special design placed between the stop-valve and the engine, and so arranged that at overload steam is by-passed direct to the low-pressure cylinder.

The following particulars—supplied by the makers—are the results obtained at the official test of the plant, carried out at the maker's works :—

Trial Results (Official), 13 in., 20 in. and 30 in. by 13 in. Triple-expansion Engine.

Main steam pressure	160 lb. per square inch.
Throttled steam pressure	143 „ „
Mean i.h.p.	578 „ „
Mean b.h.p.	540 „ „
Mean r.p.m.	330 „ „
Mean vacuum at engine exhaust... ...	25·35 in. mercury.
Total pounds of water per hour	8,190 lb.
Water per i.h.p. per hour	14·2 lb.
Water per b.h p. per hour...	15·2 lb.
Mechanical efficiency	93·5 per cent.

The indicator cards shown in figs. 1445, 1446 and 1447, are samples of those taken during the official trial, and the order in which the cranks lead and follow is that given. None of the cylinders are steam-jacketted, as experience shows that their effect at such high speeds is so slight as to make it not worth the increased first cost in fitting them.

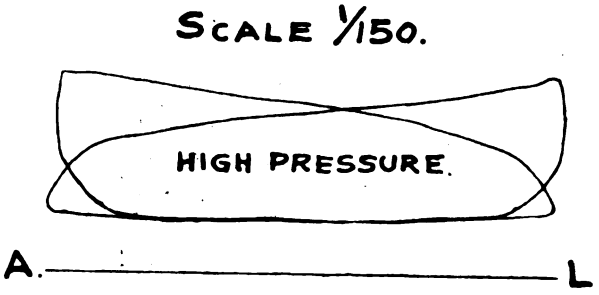

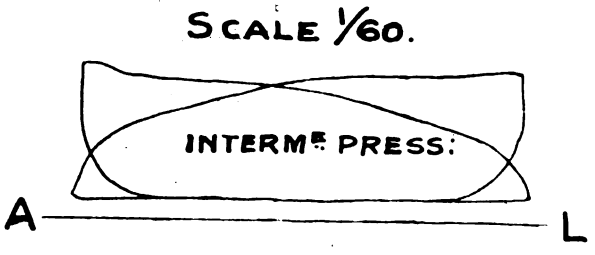

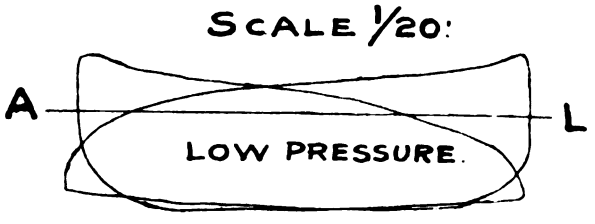

FIGS. 1445 TO 1447.—INDICATOR DIAGRAMS FROM ALLEN ENGINE.

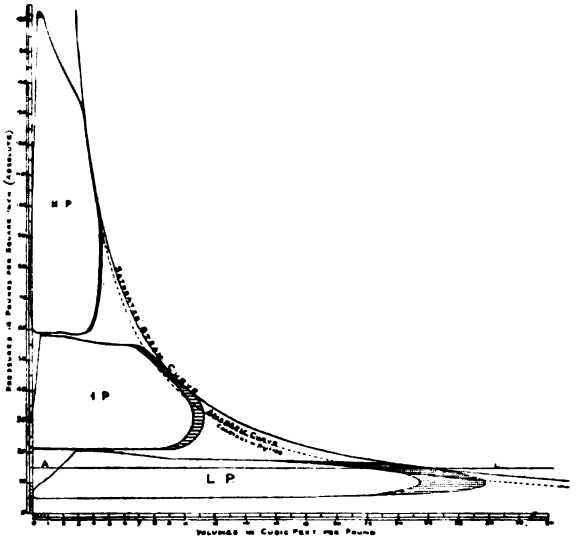

FIG. 1448.—DIAGRAM OF ONE POUND OF STEAM PASSING THROUGH THE ENGINE.

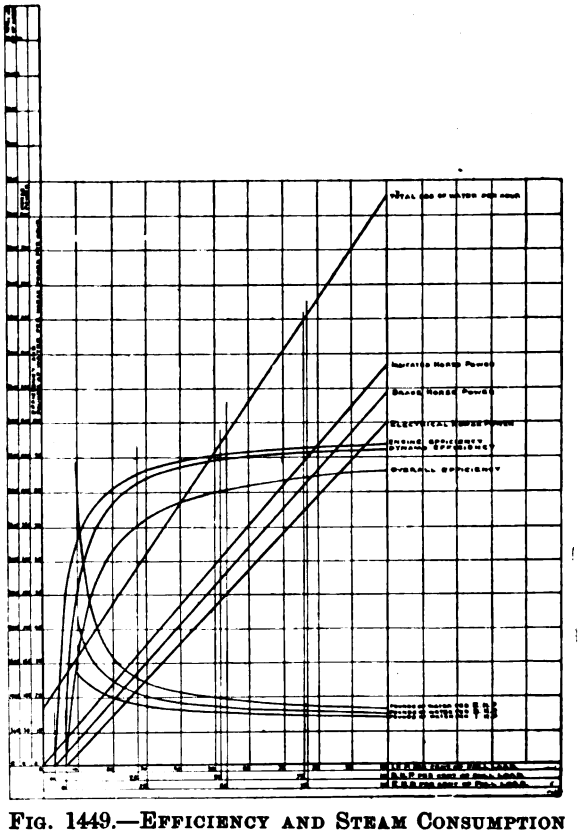

FIG. 1449.—EFFICIENCY AND STEAM CONSUMPTION CURVES.

Fig. 1448 shows the same diagrams combined under a common saturation curve and an adiabatic curve. The whole diagram is for 1 lb. of steam passing through the engine, and to enable the use of a common saturation curve and adiabatic curve for all three cylinders, the cushion steam has been eliminated in each case, as a quantity which does not pass through the engine. The shaded areas indicate the quantity of moisture in the steam during expansion and at release in each cylinder, and fig. 1449 gives a number of curves deduced from readings taken during the official trials, and shows the efficiencies and steam consumptions throughout.

Latterly turbines have displaced reciprocating engines. These have the advantage of occupying even less space than a high speed reciprocating plant, and are now built to give quite as good results in steam consumption. The credit of introducing and developing the steam turbine belongs to the Hon. C. A. Parsons, though several other steam turbines are now on the market. One of these—the "Curtis," by Messrs. the British Thomson-Houston Company—is shown in fig. 1450; while figs. 1451 and 1452 show the construction of the nozzles and blades, the last being taken from a photograph of the revolving wheel with the blades on the outer circumference. The upper portion of fig. 1451 shows the high-pressure steam nozzles provided with valves for regulation, while the lower sketch shows the open nozzles for the low pressure wheel. The arrows show the course of the steam in passing through the turbine. Turbines may be worked with low-pressure exhaust steam, and in many cases have been installed to work with exhaust steam given off by other engines. In such cases, however, provision has to be made for highly efficient condensing plant, and, if the supply of steam be intermittent, for "heat" accumulators also. The latter consists of a large cylinder filled with a mass of metal, which absorbs the surplus heat of the supply and gives it off again when the supply ceases for a short time.

Compressed air has long been used for the transmission of power, but it is only within recent years with the introduction of stage compressing that the efficiency has been such as to warrant its adoption to any considerable extent. For many years 40 per cent. efficiency was regarded as the maximum that could be obtained, but with the introduction of multi-stage compressors, the efficiency has been raised until it approaches that of electricity, though it will probably never be equal to it.

The difficulty with regard to compressed air lies in the fact that it is necessary to extract the heat generated during compression, which means that the work done in generating the heat, which is inseparable from compressing air, is wasted. By Boyle's law if a gas be compressed at a constant temperature the pressure varies inversely as the space occupied or volume—that is to say, if a cubic foot of air at

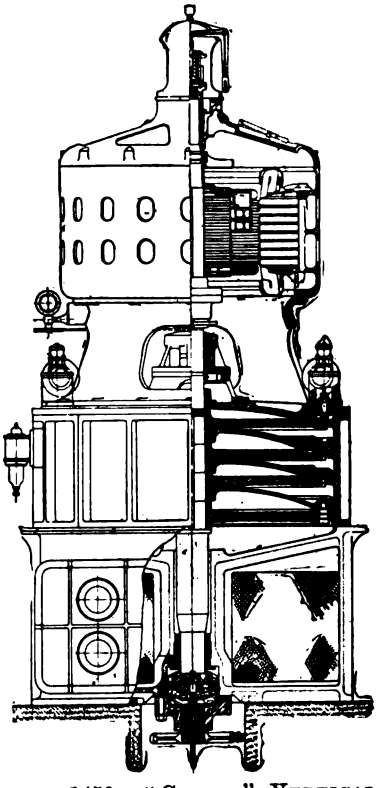

FIG. 1450.—"CURTIS" VERTICAL TURBINE.

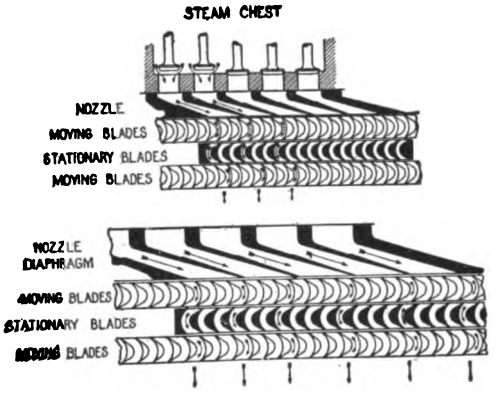

FIG. 1451.—STEAM NOZZLES AND BLADES OF "CURTIS" TURBINE.

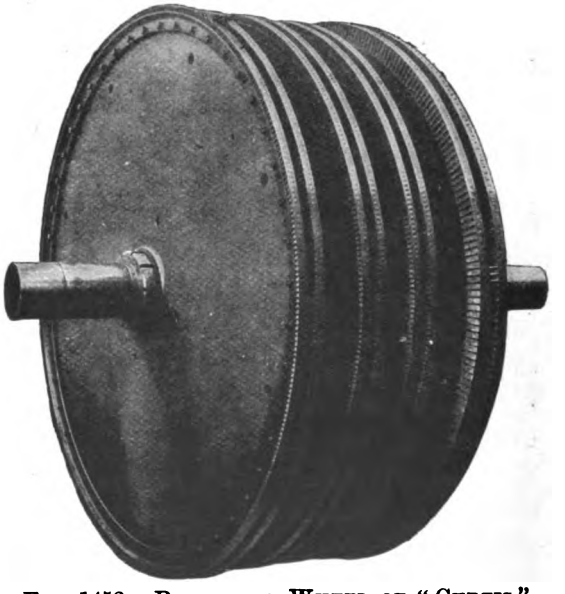

FIG. 1452.—REVOLVING WHEEL OF "CURTIS" TURBINE.

15 lb. per square inch pressure be compressed into half a cubic foot, the pressure would be 30 lb. per square inch, or

$$P\,V = \text{constant},$$

where P = pressure

V = volume,

thus $15 \times 1 = 15$

$30 \times \frac{1}{2} = 15$

and if further compression goes on, say to one quarter cubic feet, the pressure would be, since 15 is the constant,

$$\frac{15}{0{\cdot}25} = 60 \text{ lb. per square inch,}$$

and a curve representing these pressures and volumes is termed the isothermal

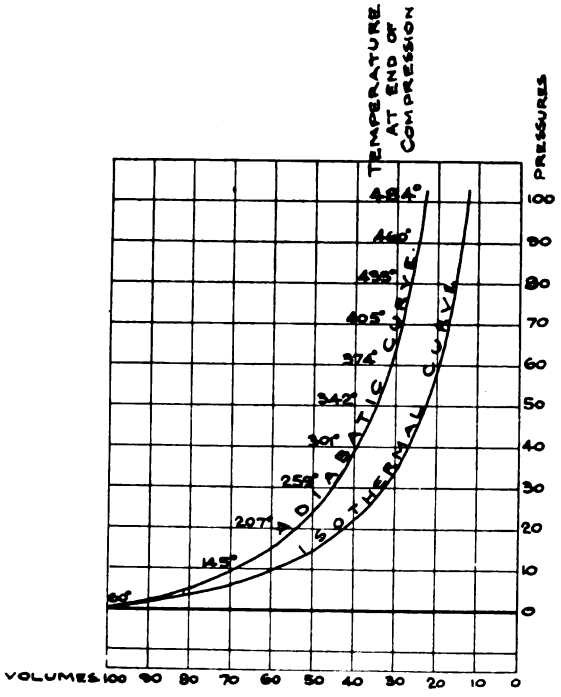

FIG. 1453—COMPRESSION CURVES.

curve shown in fig. 1453. Air, however, cannot be compressed without receiving heat, or having its temperature raised, which is an exact measure of the work done upon it, and unless this heat be extracted the compressing cylinder would soon become too hot to work. The converse is equally true—that the compressed air cannot do work without giving up heat, and when expanded in the cylinder of an air motor or drill the temperature becomes so low as to be considerably below

freezing point, which results in the moisture freezing in the ports and passages, often causing considerable trouble.

If the air be compressed and its temperature raised, the pressure will now increase more than would be the case when compressed isothermally, and the curve becomes steeper—and is known as the "adiabatic" curve—as shown in fig. 1453, which shows the difference between the two curves. The constant for adiabatic compression is obtained from

$$P V^{1.408} = \text{constant.}$$

As, however, part of the heat is extracted by cooling the walls and heads of the cylinder by circulating water around them, the compression is less than adiabatic, though it approaches nearer to it than to the isothermal, and the late Professor Unwin took the value

$$P V^{1.25} = \text{constant}$$

as a nearer approximation to the true curve.

If P = initial pressure of the air in pounds per square foot,
V = volume of air in cubic feet,
T = absolute temperature of the air in degrees Fahr. = 461 + temperature of air,

and P_f, V_f, T_f, the final pressure, volume and absolute temperature after compression, then

$$P V^{1.25} = P_f V_f^{1.25} = \text{constant},$$

and

$$\frac{T_f}{T} = \left(\frac{V}{V_f}\right)^{0.25} = \left(\frac{P_f}{P}\right)^{0.2}$$

and

$$T_f = T\left(\frac{P_f}{P}\right)^{0.2} = T\left(\frac{V}{V_f}\right)^{0.25}$$

also

$$\frac{P_f}{P} = \left(\frac{V}{V_f}\right)^{1.25}$$

$$P_f = P\left(\frac{V}{V_f}\right)^{1.25}$$

The work required to compress any given volume of air may be determined from

$$W = 5\,PV\left[\left(\frac{P_f}{P}\right)^{0.2} - 1\right]$$

where W = work in foot-pounds.

If the weight of air be taken, then

$$W = 5 \times 53{\cdot}2\,T\left[\left(\frac{P_f}{P}\right)^{0.2} - 1\right]$$

W being the work required in foot-pounds per pound of air; 53·2 is a constant for dry air. Consequently the minimum horse-power required will be

$$\text{H.P.} = \frac{5\,PV\left[\left(\frac{P_f}{P}\right)^{0.2} - 1\right]}{33{,}000}$$

or

$$\text{H.P.} = \frac{5 \times 53{\cdot}2\,\text{T}\left[\left(\frac{\text{P}_f}{\text{P}}\right)^{0{\cdot}2} - 1\right]}{33{,}000}$$

$$= \frac{266\,\text{T}\left[\left(\frac{\text{P}_f}{\text{P}}\right)^{0{\cdot}2} - 1\right]}{33{,}000}$$

V is usually expressed in cubic feet, but P is more often expressed in pounds per square inch, hence if P = pounds per square inch,

$$\text{H.P.} = \frac{5 \times \text{P} \times 144\,\text{V}\left[\left(\frac{\text{P}_f}{\text{P}}\right)^{0{\cdot}2} - 1\right]}{33{,}000}$$

Pressures up to 60 lb. per square inch may be compressed in single-stage compressors, though even at this pressure more economical results may be obtained by compressing in two stages. It is important to notice, however, that the lower the pressure the greater the efficiency of the system. Where the compression is in two stages, the first stage may be taken as

$$p = \sqrt{\text{P}}$$

Where p = pressure in low-pressure cylinder,
P = final pressure.

Fig. 1454 shows a diagram illustrating the economy gained in two-stage compression. Here air at atmospheric pressure and a temperature of 60 degs. Fahr. is compressed to 21·3 lb. per square inch and a temperature of 215 degs. Fahr., and is then conducted to an inter-cooler, where the temperature is reduced to 60 degs. Fahr., and is then delivered to the high-pressure cylinder, where it is further compressed to 73·5 lb. per square inch, or five atmospheres, and a final temperature of 215 degs. Fahr. The equivalent temperature in a single-stage compressor would have been 410 degs. Fahr. on the adiabatic curve, while the actual result approaches the isothermal curve. The actual work saved is the shaded portion.

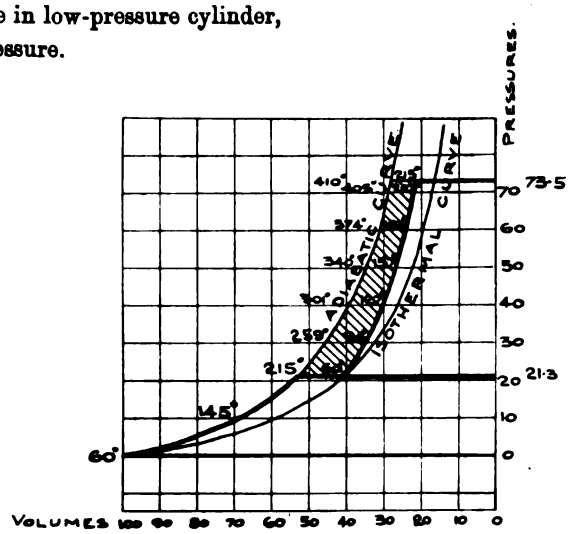

Fig. 1454.—Diagram of Work Saved in Two-stage Compression.

The following table gives particulars relating to horse-power required, temperature and pressure:—

Compressed Air Table.

Gauge pressure (lb. per square inch).	Pressure in atmospheres.	Absolute pressure.	Absolute temperature (Fahrenheit).	Temperature from 60 degs. F.	Volume adiabatic.	Volume isothermal.	Mean pressure for full stroke adiabatic.	Mean pressure for full stroke isothermal.	Horse-power required per cubic foot of free air at 60 degs. F. and atmospheric pressure adiabatic.	Horse-power required per cubic foot of free air at 60 degs. F. and atmospheric pressure isothermal.	Two stage compression.	
											Horse-power required per cubic foot.	Temperature degs. Fahr. at end of each stage.
1	1·06	15·7	531·24	70·04	0·954	0·936	0·98	0·97	0·004	0·004	—	—
2	1·13	16·7	540·84	79·64	0·913	0·882	1·92	1·87	0·008	0·008	—	—
3	1·20	17·7	550·04	88·84	0·876	0·830	2·86	2·68	0·012	0·011	—	—
4	1·27	18·7	558·90	97·68	0·843	0·786	3·73	3·51	0·016	0·015	—	—
5	1·34	19·7	567·38	106·18	0·812	0·746	4·55	4·30	0·020	0·018	—	—
6	1·41	20·7	575·60	114·40	0·784	0·710	5·31	5·06	0·023	0·022	—	—
7	1·47	21·7	583·52	122·32	0·758	0·677	6·08	5·76	0·026	0·025	—	—
8	1·54	22·7	591·19	130·00	0·734	0·647	6·85	6·35	0·030	0·027	—	—
9	1·61	23·7	598·63	137·43	0·712	0·620	7·52	7·00	0·032	0·030	—	—
10	1·68	24·7	605·85	144·65	0·691	0·595	8·28	7·63	0·036	0·033	—	—
15	2·02	29·7	639·12	177·92	0·606	0·494	11·5	10·3	0·050	0·045	—	—
20	2·36	34·7	668·62	207·42	0·543	0·423	14·4	12·6	0·063	0·055	—	—
25	2·70	39·7	695·23	234·03	0·494	0·370	17·1	14·6	0·074	0·063	—	—
30	3·04	44·7	719·57	258·37	0·454	0·328	19·5	16·3	0·085	0·071	—	—
35	3·38	49·7	742·04	280·84	0·421	0·295	21·6	17·9	0·094	0·078	—	—
40	3·72	54·7	762·95	301·75	0·393	0·268	23·6	19·3	0·103	0·084	—	—
45	4·06	59·7	782·56	321·36	0·369	0·246	25·6	20·6	0·111	0·090	—	—
50	4·40	64·7	801·02	339·82	0·349	0·227	27·4	21·7	0·119	0·095	—	—
55	4·74	69·7	818·50	357·30	0·331	0·210	29·1	22·9	0·127	0·099	—	—
60	5·08	74·7	835·11	373·91	0·315	0·196	30·7	23·9	0·134	0·104	0·119	201
65	5·42	79·7	850·95	389·75	0·301	0·184	32·2	24·8	0·140	0·108	0·123	205
70	5·76	84·7	866·10	404·90	0·288	0·173	33·7	25·8	0·147	0·112	0·129	212
75	6·10	89·7	880·63	419·43	0·276	0·163	35·2	26·5	0·153	0·116	0·133	216
80	6·44	94·7	894·59	433·39	0·266	0·155	36·6	27·3	0·159	0·119	0·139	223
85	6·78	99·7	908·04	446·84	0·256	0·147	37·9	28·1	0·165	0·122	0·143	228
90	7·12	104·7	921·02	459·82	0·247	0·140	39·1	28·8	0·170	0·125	0·147	223
95	7·46	109·7	933·56	472·36	0·240	0·134	40·4	29·5	0·176	0·128	0·150	237
100	7·80	114·7	945·71	484·51	0·234	0·128	41·5	30·1	0·181	0·131	0·154	242
105	8·14	119·7	957·44	496·24	0·225	0·122	42·7	30·8	0·186	0·134	0·158	245
110	8·48	124·7	968·91	507·71	0·219	0·117	43·8	31·4	0·191	0·137	0·161	248
115	8·82	129·7	980·11	518·91	0·213	0·118	44·9	32·0	0·196	0·139	0·167	254
120	9·16	134·7	990·80	529·60	0·207	0·109	46·0	32·5	0·200	0·142	0·169	258
125	9·50	139·7	1,001·2	540·02	0·202	0·105	47·1	33·0	0·205	0·144	0·171	261
130	9·84	144·7	1,011·6	550·44	0·197	0·101	48·0	33·6	0·209	0·146	0·175	265
140	10·5	154·7	1,031·2	569·99	0·188	0·095	50·0	34·6	0·218	0·151	0·181	272
150	11·2	164·7	1,050·0	580·66	0·179	0·089	51·8	35·5	0·226	0·155	0·187	280

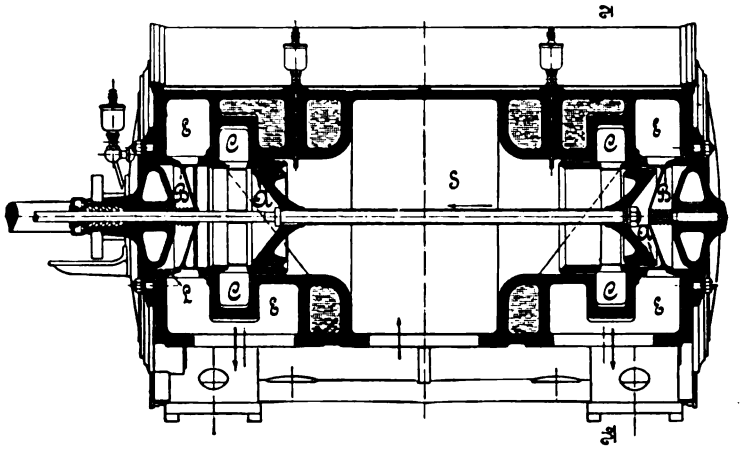

FIG. 1455.

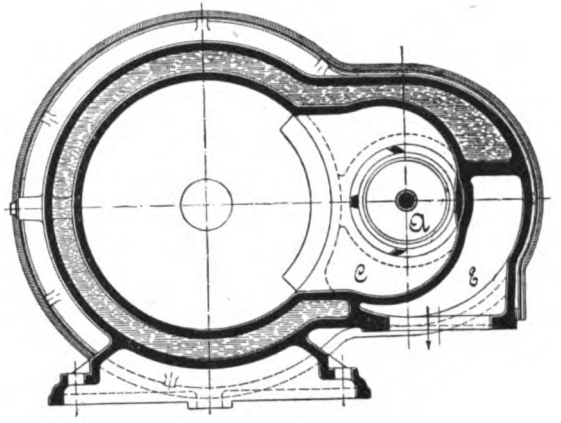

FIG. 1456.

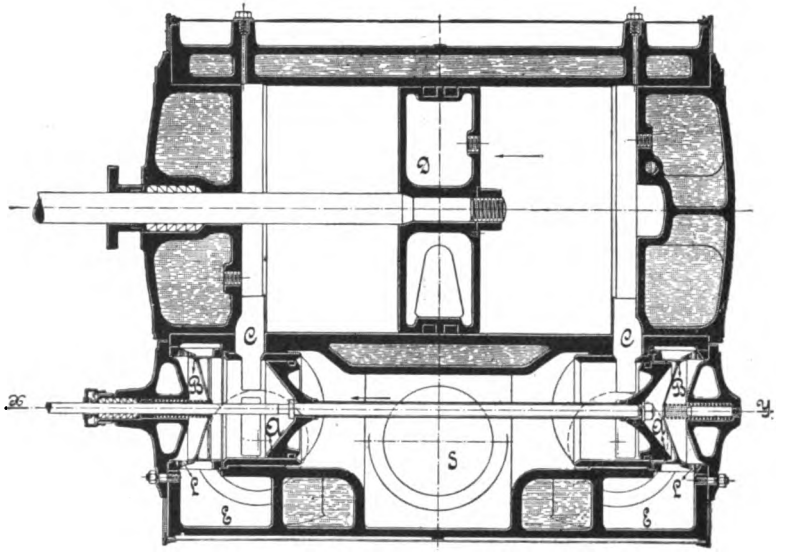

FIG. 1457.

FIGS. 1455 TO 1457.—"KOSTER" AIR COMPRESSOR CYLINDER.

Air compressors are designed to give as large a volumetric efficiency as possible, and to this end the air entering the cylinder should be at as low a temperature as possible. The inlet valves must be designed to act promptly and to give a large enough opening to avoid wire-drawing the entering air or by frictional resistance raising its temperature. Many air-compressors are now constructed with

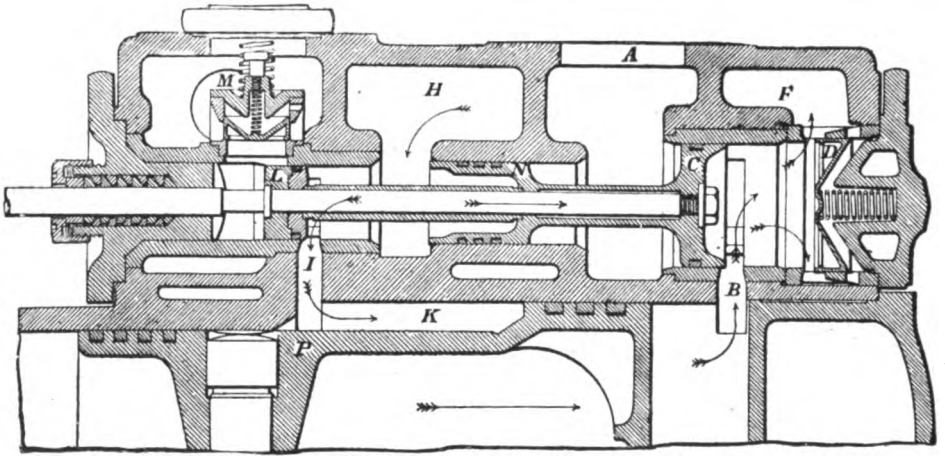

FIG. 1458.—"KOSTER" AIR COMPRESSOR CYLINDER VALVE.

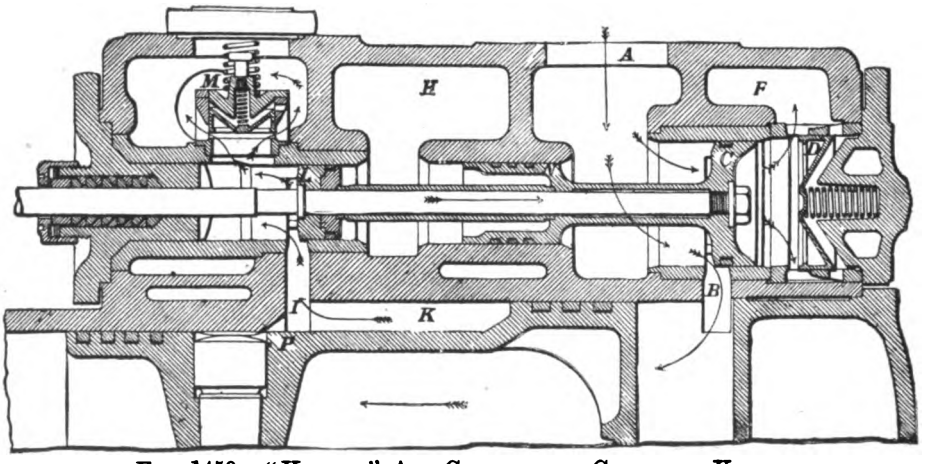

FIG. 1459.—"KOSTER" AIR COMPRESSOR CYLINDER VALVE.

mechanically-moved valves to obtain this object, though, on the other hand, many others have valves merely operated by the air pressure.

Amongst the former, figs. 1455 to 1457 show three sectional views of the Koster patent valve gear and cylinder as made by Messrs. W. H. Bailey and Co. Limited, while figs. 1458 and 1459 show two views of the valve for the suction and

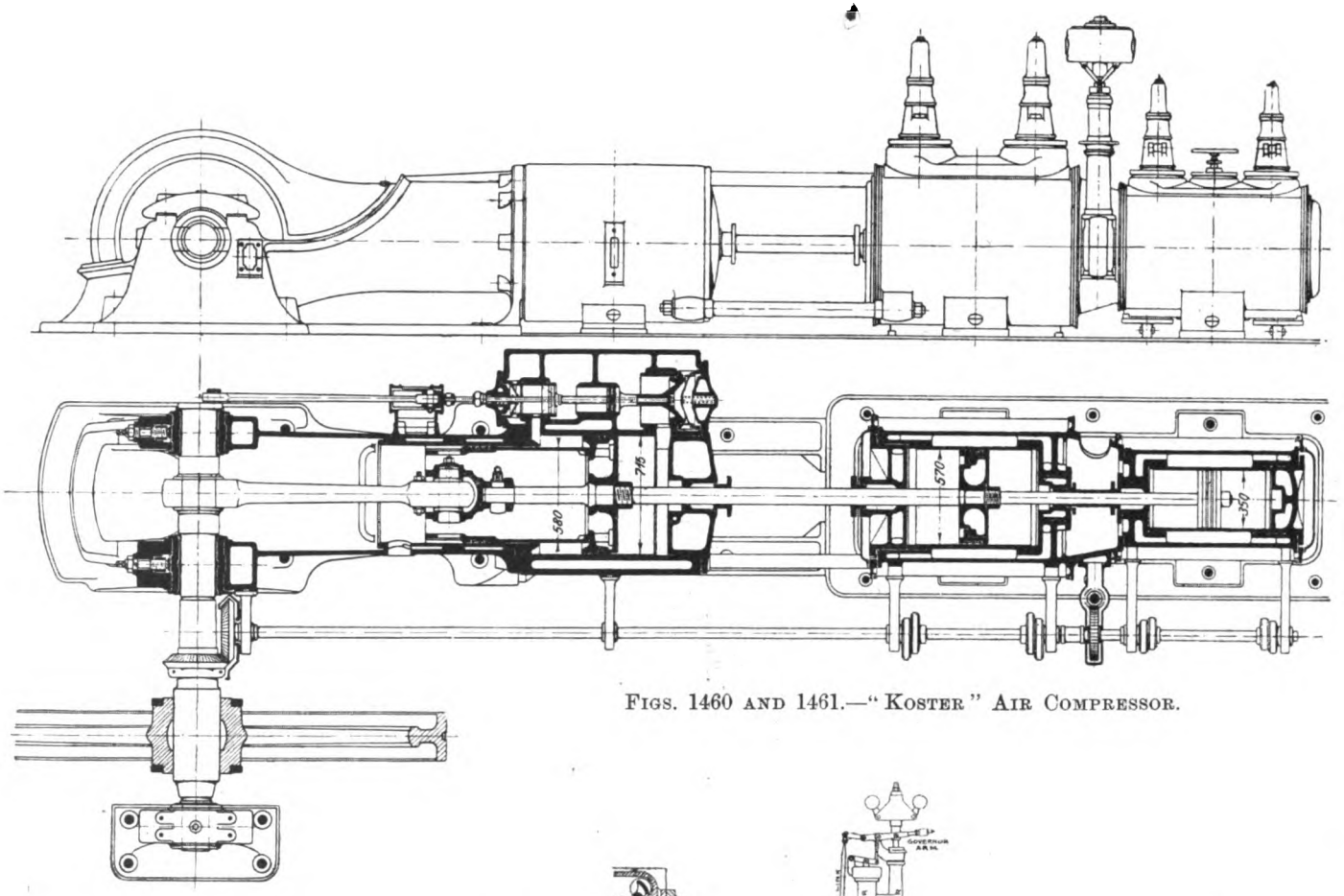

FIGS. 1460 AND 1461.—"KOSTER" AIR COMPRESSOR.

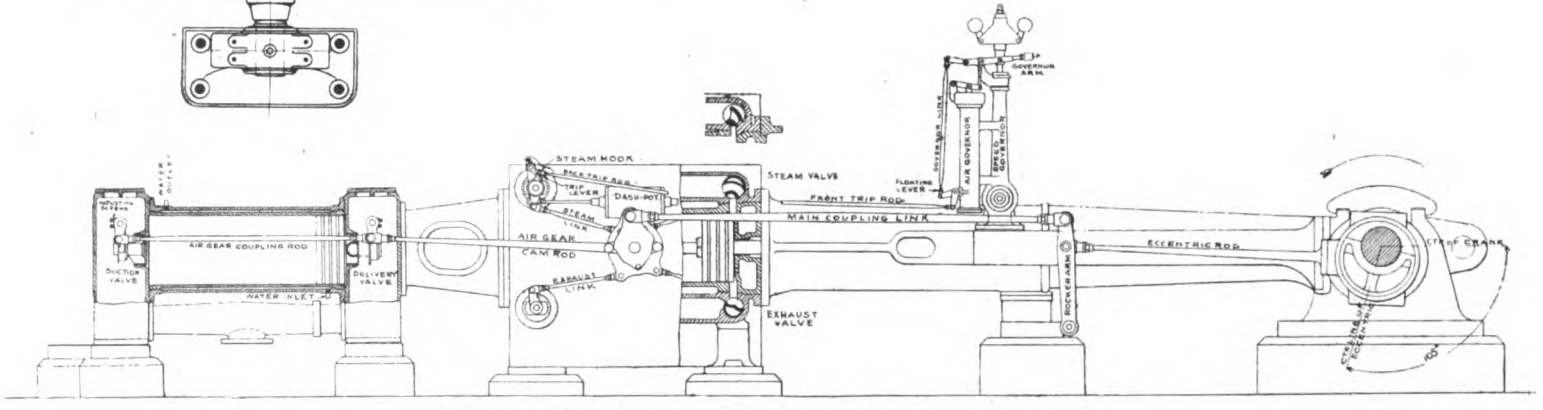

FIG. 1462.—VALVE GEAR OF "RIEDLER" AIR COMPRESSOR.

delivery stroke respectively of a two-stage compressor, provided with a differential piston. In the former *a* is the piston valve controlling the suction, while *b* is the valve controlling the delivery, which is controlled by a spring. As shown, the ports *c c* are uncovered by the valves *a*, allowing free air to enter by the ports on the right, and the delivery of the compressed air on the left, when the delivery pressure is reached, which opens the valve *b*. It will be noticed the cylinder and valve chamber are thoroughly cooled by water jackets.

In figs. 1458 and 1459 the air enters at A, and is admitted to the low pressure cylinder by the valve C, N being a guide fitted with springs to prevent leakage to the high pressure side of the piston K. In fig. 1459 the valve uncovers the ports so that free air is admitted to the low-pressure side, while the compressed air is forced through the delivery valve M, so soon as the pressure is reached. The arrows show the course of the air. Before passing to the high-pressure cylinder the air is cooled to its initial temperature in an intercooler. Figs. 1460 and 1461 show a tandem compound steam driven compressor with a trunk air piston.

In the Riedler compressor the valves are also mechanically moved, fig. 1462 showing the arrangement of steam cylinder with Corliss valves, and the valve gear which also works the air valves, these being arranged in chambers at each end of the cylinder. Figs. 1463 to 1466 show a large Riedler vertical air compressor by Messrs. Fraser and Chalmers.

The "Daw" compressor has hinged flap valves so arranged that their weight, together with a spring and the pressure inside the receiver, tend to keep them closed. Fig. 1467 shows a partial section through the cylinder and valves. The suction valve A is shown closed, and as will be seen is pivoted at B, so that it opens inwards, The spring C, however, keeps it closed, and the valve is opened by means of a small slide valve, actuated by an eccentric on the engine shaft. At the commencement of the suction stroke the slide valve in moving, places the rear end of the control cylinder D in communication with the pressure in the receiver, and this, by acting upon the piston, overcomes the spring and weight of the valve. Upon completion of the suction stroke the slide valve is reversed to exhaust, and, the spring being thus relieved of the pressure acting against it, closes the valve. The control of the opening and closing of the delivery valve B is also effected by a small slide valve, which places the front end of a balancing cylinder and piston, which balances the pressure upon the back of the valve—in communication with the receiver. The pressure in the latter acting upon the piston equalises the difference in pressures on the delivery valve due to the valve seating, and causes the valve to open at the correct time. The indicator diagrams shown in fig. 1468 serve to show that the valves open and close at the right instant.

LIBRARY OF THE UNIVERSITY OF CALIFORNIA

PLATE CXXV.

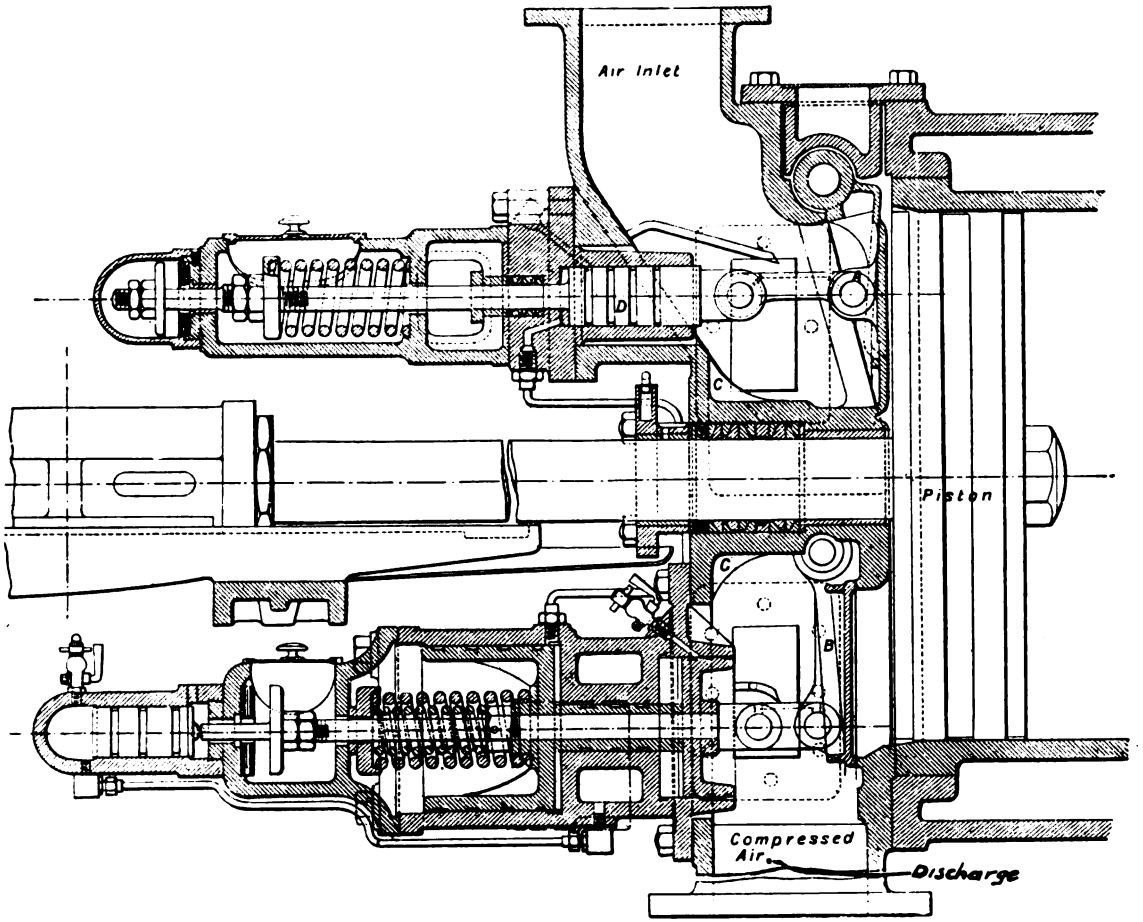

FIG. 1467.—"DAW" AIR COMPRESSOR VALVES.

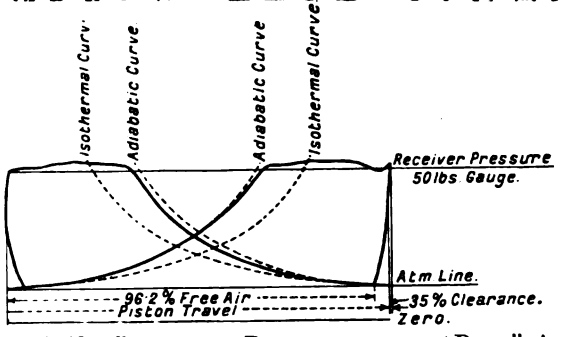

FIG. 1468.—INDICATOR DIAGRAMS FROM "DAW" AIR COMPRESSOR.

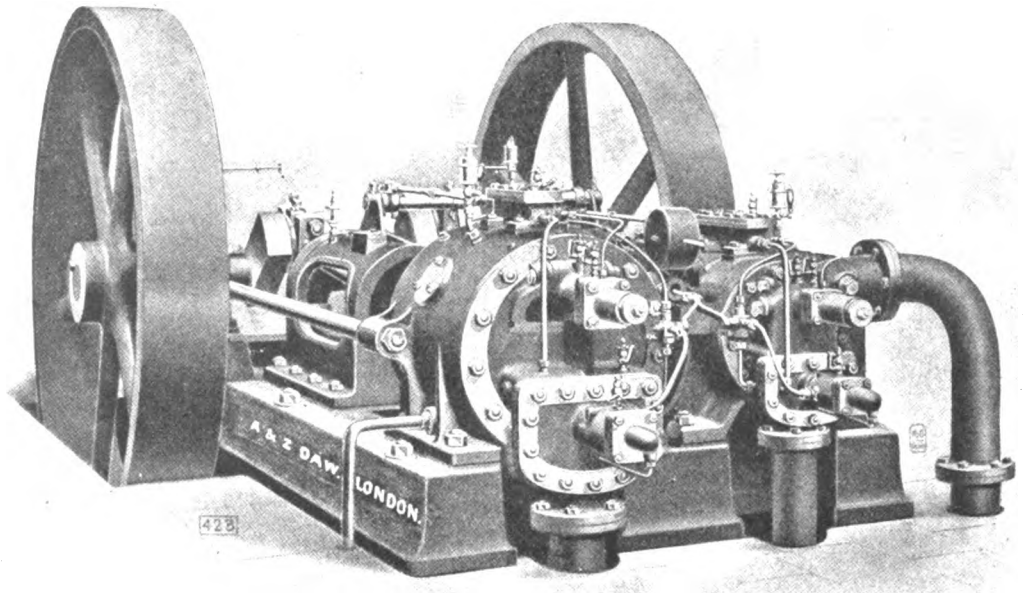

FIG. 1469.—"DAW" TWO STAGE BELT-DRIVEN AIR COMPRESSOR.

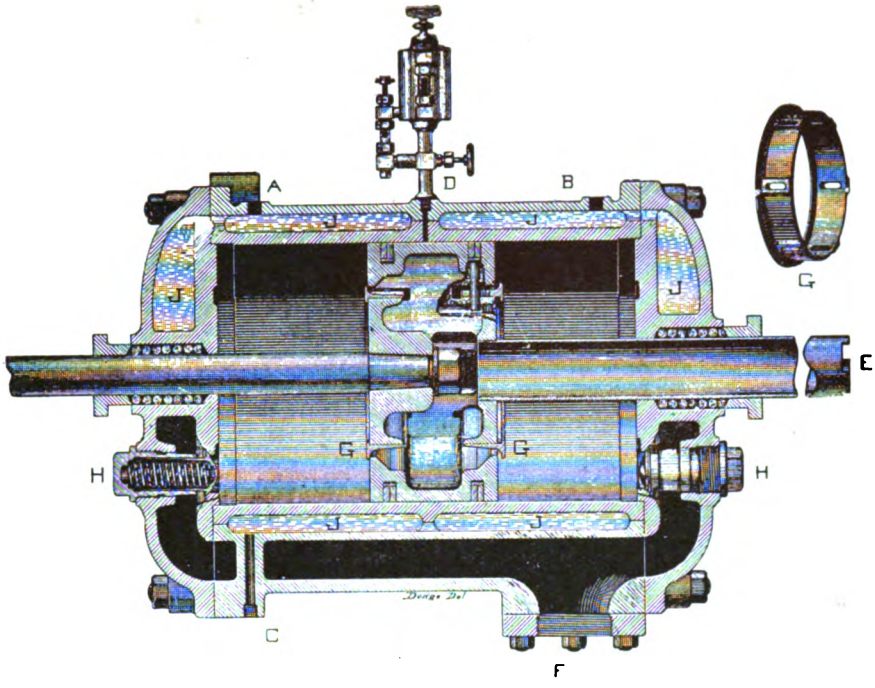

FIG. 1470.—INGERSOLL-SERGEANT AIR COMPRESSOR CYLINDER.

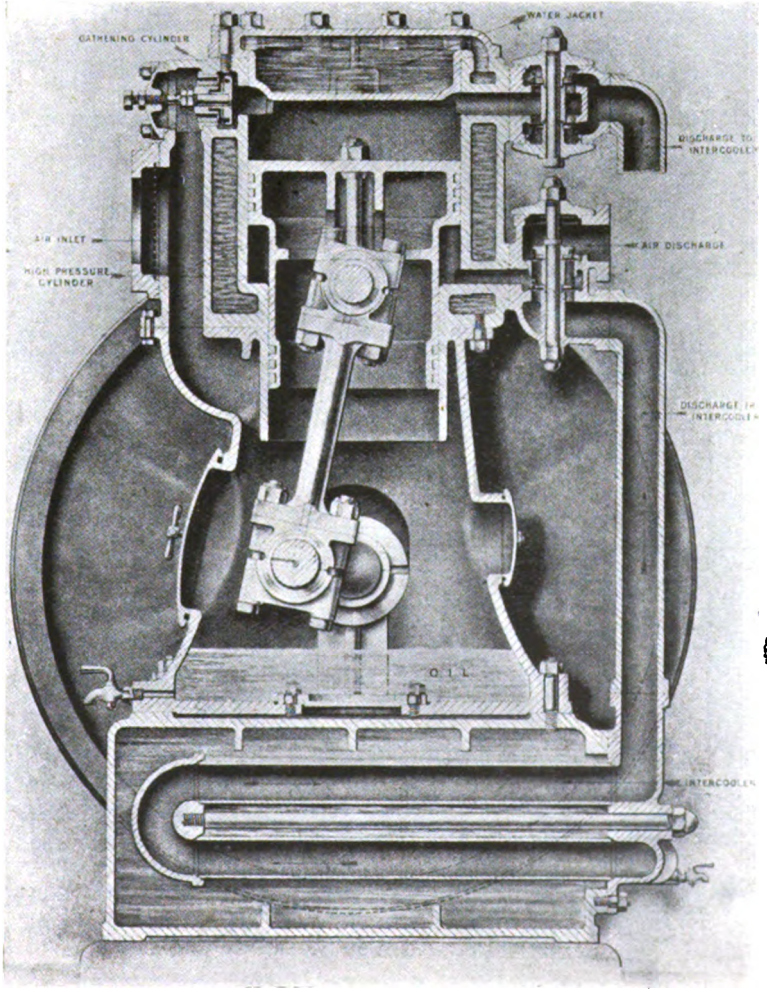

LIBRARY OF THE UNIVERSITY OF

FIG. 1471.—SECTIONAL VIEW OF COMPOUND BELT-DRIVEN COMPRESSOR.

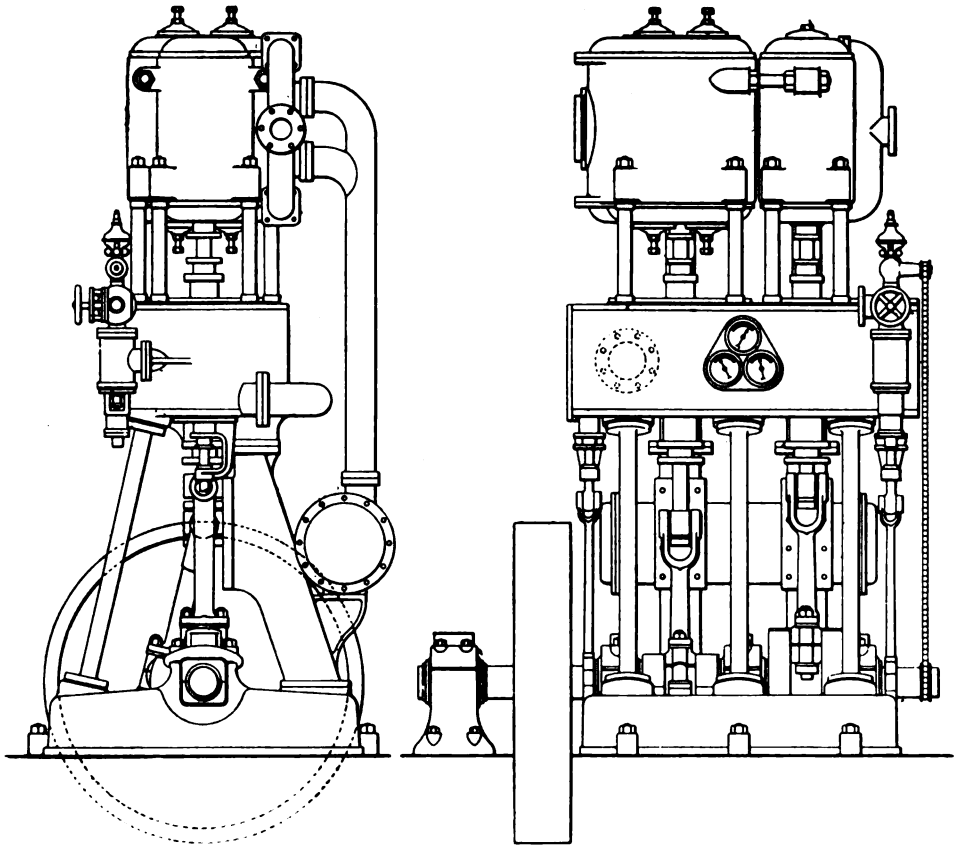

FIGS. 1472 AND 1473.—COMPOUND INTERCOOLING AIR COMPRESSOR, WITH COMPOUND STEAM CYLINDERS.

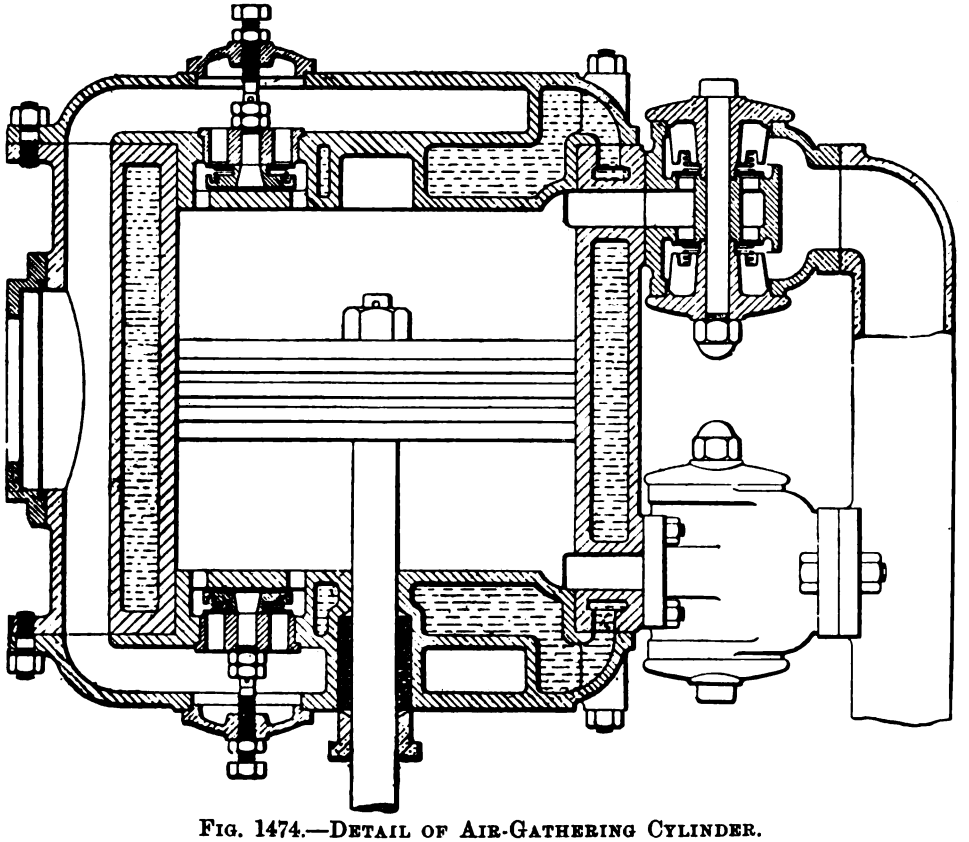

FIG. 1474.—DETAIL OF AIR-GATHERING CYLINDER.

Fig. 1469 shows a belt-driven two-stage compressor by Messrs. A. and Z. Daw.

The Ingersoll-Sergeant compressor has self-acting poppet valves placed in the cylinders for the discharge, but the suction valves are placed in the piston on either side, and the air is drawn into the interior of the piston by means of a hollow tail piston rod. Fig. 1470 shows a section through the cylinder, where A and B are the inlet and outlet respectively for the circulating cooling water in the jacket J, C

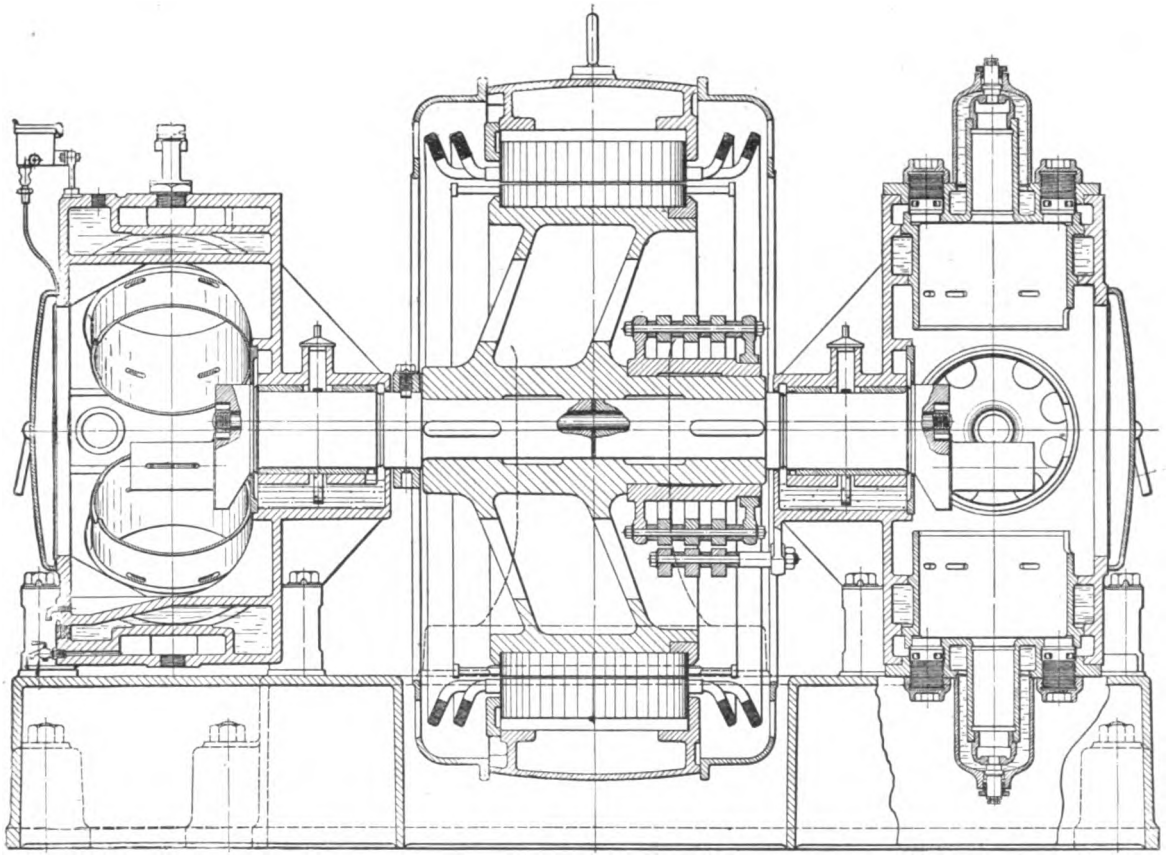

FIG. 1475.—REAVELL DOUBLE-ENDED ELECTRIC-DRIVEN AIR COMPRESSOR.

being the drain pipe. D is an automatic oil cup for lubricating the cylinder. GG are the suction valves situated on each side of the piston, E being the hollow piston rod through which the air is drawn. H are the poppet discharge valves, F being the air outlet to the receiver. The valves G are quite free to move backwards and forwards, and hence as the piston comes to a stop at the end of each stroke the valves automatically open and close simply by their own inertia.

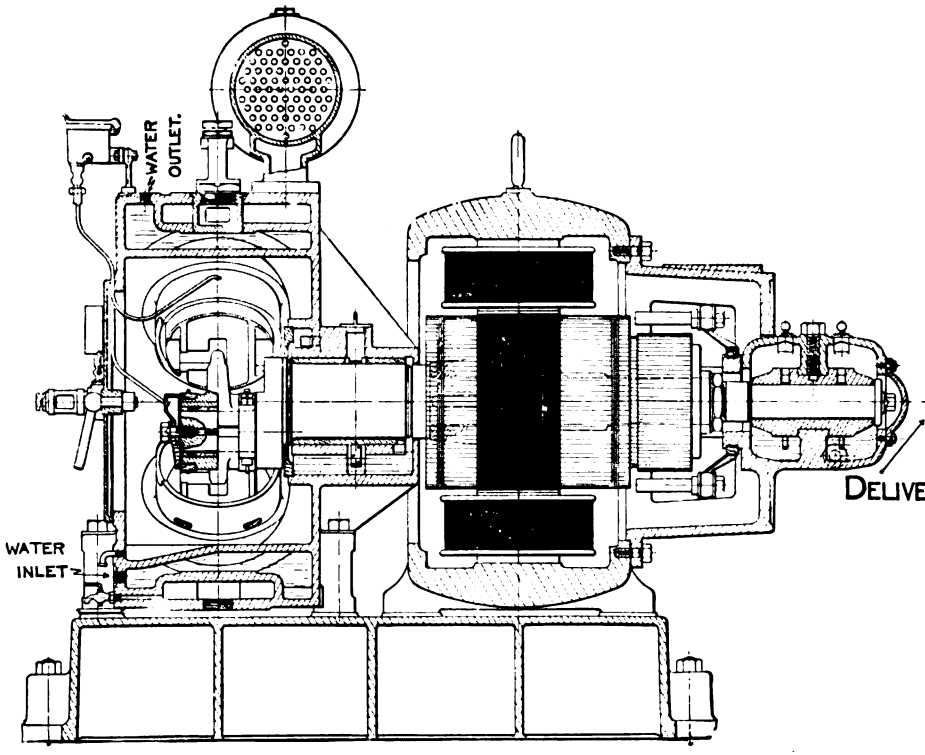

FIG. 1476.

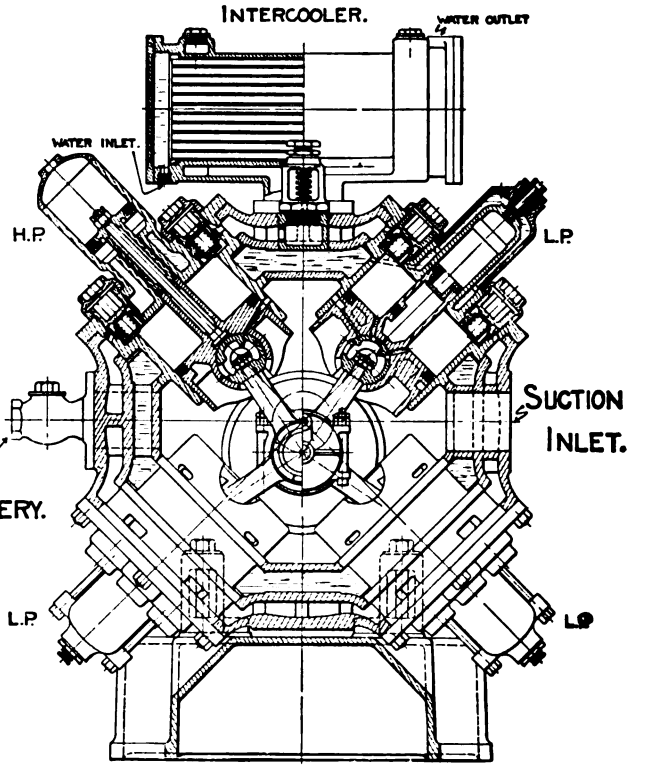

FIG. 1477.

FIGS. 1476 AND 1477.—SINGLE END TWO-STAGE ELECTRIC-DRIVEN AIR COMPRESSOR.

Another compressor with self-acting valves is that of Messrs. Alley and Maclellan. Fig. 1471 (*see* page 693) shows a sectional elevation of a belt-driven two-stage differential trunk piston type with water-cooled inter-cooler. The valves are outside the cylinder casing, and may be taken out and examined in a few minutes by merely taking out the centre bolt. Figs. 1472 and 1473 show the general arrangement of a compound two-stage vertical compressor, the air cylinders being placed at

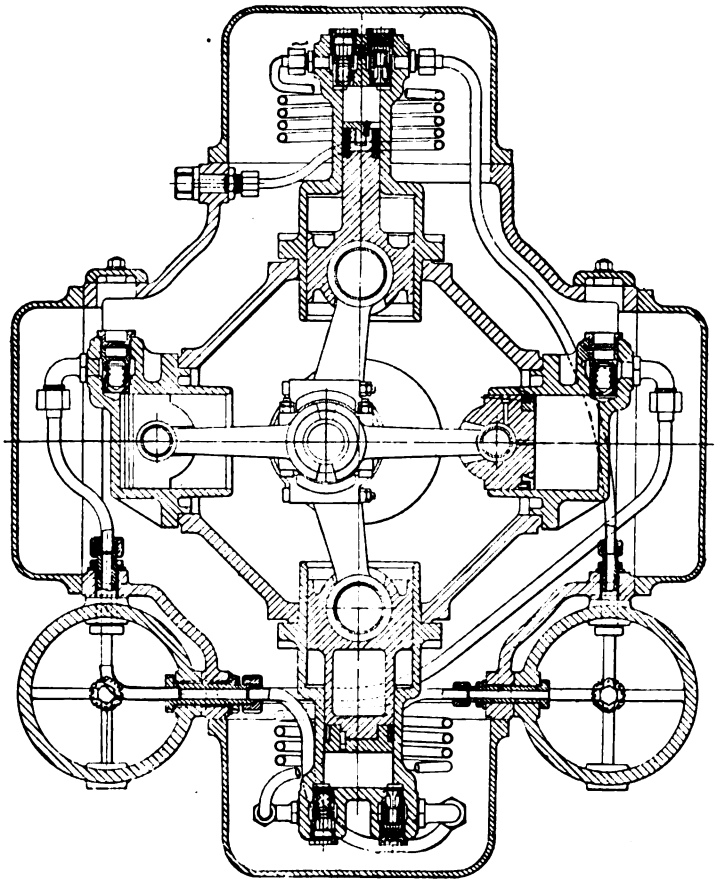

FIG. 1478.—REAVELL THREE-STAGE AIR COMPRESSOR.

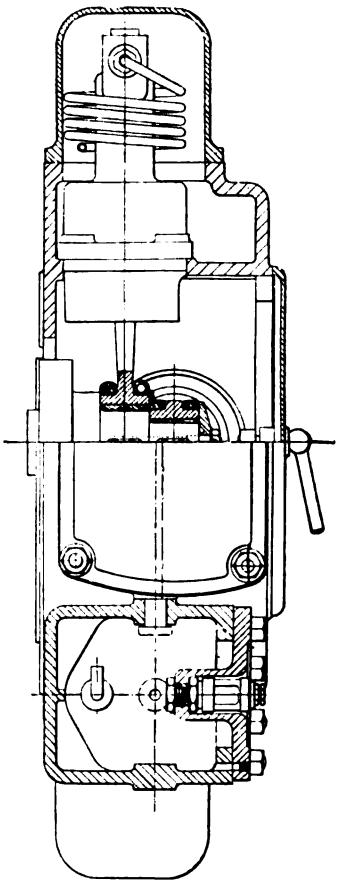

FIG. 1479.—REAVELL THREE STAGE.

the top, fig. 1474 being a section through the low-pressure air cylinder, which clearly indicates the simple character of the valves.

Fig. 1475 shows a section through Messrs. Reavell and Co.'s Limited double-ended electrically-driven high-speed compressor. This compressor consists of four cylinders arranged radially around the driving crank, the four pistons, which are

of the trunk type, being driven from the same crank pin. There are no suction valves, but the air enters through ports arranged in the crosshead of the connecting rods. These are better shown in figs 1476 and 1477, which illustrate a two-stage single-ended compressor with inter-cooler. The small piston and cylinder keeps the connecting rod end in constant thrust with the crank pin. In fig. 1475 the electromotor is driven by three-phase current, while fig. 1476 is driven by a continuous-current motor.

Figs. 1478 and 1479 show a three-stage compressor in which the two horizontal cylinders are used for the first stage, the air being then passed by means of the inter-cooler coil to the lower vertical cylinder and thence to the upper vertical cylinder for the final compression. These compressors are useful for compressing air underground, thus combining the efficiency of electrical transmission with the suitability of compressed air for driving the motor.

For the transmission of compressed air in pipes, the dimensions of the pipe may be obtained from D'Arcey's formula :—

$$C = c \sqrt{\frac{D^5 \times (P - p)}{W \times L}}.$$

Where
- C = cubic feet of air discharged per minute,
- c = a co-efficient depending upon the size of pipe,
- D = diameter of pipe in inches,
- P = initial pressure at compressor end of pipe line,
- p = terminal pressure,
- W = weight of a cubic foot of air at pressure P,
- L = length of pipe in feet.

The co-efficient c for different pipes is as below :—

Diameter of pipe in inches =	1,	1½,	2,	2½,	3,	3½,	4,	4½,	5,	6,	8
Co-efficient =	45·3,	50·3,	52·7,	54·4,	56·1,	56·9,	57·8,	58·1,	58·4,	59·5,	60·7

and W may be obtained from

$$W = \cdot 0761 \frac{P}{p},$$

P and p being in absolute pressures.

CHAPTER X.

COKE OVENS.

COKE is formed by driving off the volatile matter contained in the bituminous varieties of coal by heat when excluded from the air. The earliest method of manufacturing coke was to burn or "char" the coal in heaps in the open air. These heaps were built up on a prepared base, and were formed either round or rectangular, about 5 ft. in height, with flues—in the case of a round heap radiating from a central chimney, and in the case of rectangular heaps running longitudinally and at right angles to two or more chimneys depending upon the length of the heap—formed either of loosely-packed pieces of coke and coal or brick so as to allow a free draught. The outside of the heap was covered with coke dust or earth, and the fires started in the flues. From five to eight days were required for the operation, and considerable care had to be exercised in regulating the proper admission of air to the flues to prevent the coal burning, and thus causing waste. After burning, until all flame and smoke disappeared, the heap was banked up with wet sod or earth and smothered out, and finally cooled with water.

This method was succeeded by coking in open-top rectangular kilns, consisting of side walls with suitable air openings, but with little or no improvement in shortening the period required for coking or preventing waste. It was, however, a step towards the closed or retort oven, and finally evolved into the well-known beehive coke oven. This would appear to have been introduced about the year 1620, and, though improved in design and construction, the principle of its working is still the same, and is most largely employed at the present day for the production of metallurgical coke.

During recent years, however, the by-product coke oven has been largely developed, and would appear to be gradually displacing the ordinary beehive type, though there still exists a preference in many quarters for coke made in the older type of oven.

In the beehive oven the coal is coked by heat generated from the gases given off by the coal being coked, which are partially consumed by the air admitted

through openings in the oven doorway above the level of the coal surface. In the by-product oven, on the other hand, the air is totally excluded and the oven is heated externally by means of flues which the heated gases traverse, while the volatile matter given off by the coal in the coking process is drawn off through pipes by exhausting machinery, and the tar, ammonia, &c., extracted, and the credit of introducing the by-product oven in this country belongs to Messrs. Pease and Partners Limited, who put down, in the year 1882, a battery of Simon-Carves ovens, in conjunction with the late Mr. Henry Simon, of Manchester. These ovens were an improvement upon the "Carves" by-product oven in France, and until these successfully demonstrated the reverse, there was a general conviction that coke made in these ovens must necessarily be of inferior quality to that produced

FIG. 1480.

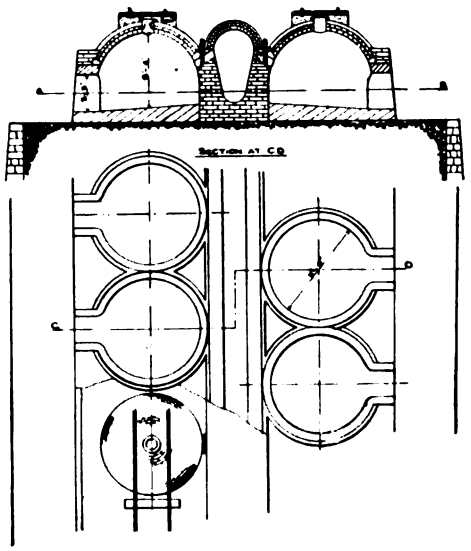

FIG. 1481.

FIGS. 1480 AND 1481.—BEEHIVE COKE OVENS.

in the beehive oven—a conviction which even at the present day is not entirely disposed of. Since then several improvements have been made in the construction of the ovens, chiefly in the arrangement of the flues for heating.

The ordinary beehive oven consists of a dome-shaped building, from 9 to 12 feet in diameter and from 6 to 7 or 8 feet in height, with a circular opening about 1 ft. 6 in. in diameter at the top for the purpose of charging the oven. At the front a doorway with semi-circular top is formed, about 4 ft. by 3 ft., for the purpose of drawing the coke. The inside lining consists of soft silica brick, while

the floor is slightly inclined from the back towards the doorway. At the back of the oven is a common flue, communicating with each oven by an opening, termed the "back-eye," in the oven a little below the top of the dome, which carries off the products of combustion to the chimney. The coal is charged at the top, and is evenly spread over the floor of the oven by means of a rake until it reaches a height a little below the top of the doorway, when the latter is built up with brick, with the exception of one or two small openings for the admission of air. If the oven is hot, after standing awhile, the upper surface of the coal gives off its volatile

FIG. 1482.

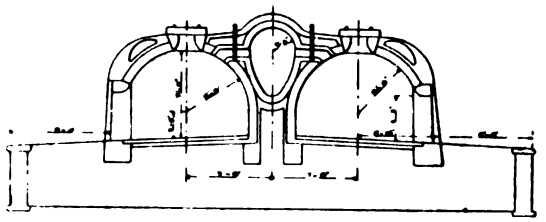

FIGS. 1484 TO 1494.

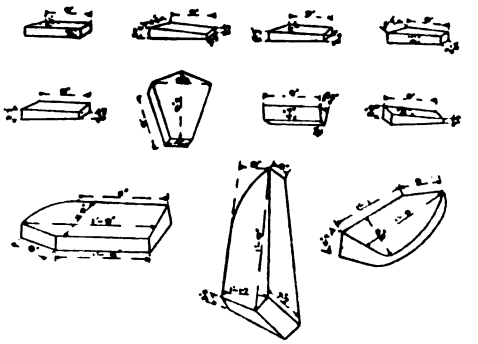

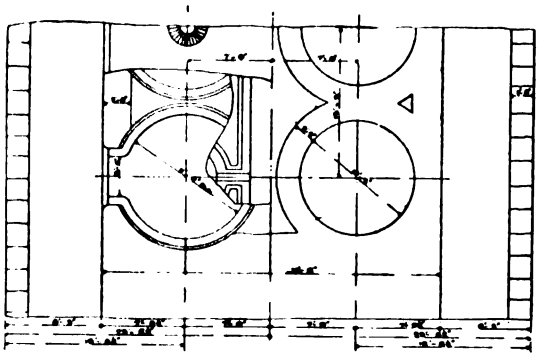

FIG. 1483.

FIGS. 1482 TO 1494.—BEEHIVE COKE OVENS AND DETAILS.

matter, which is lighted up by the reflected heat from the top of the dome, and the coking process commences, beginning at the top and gradually going through the mass of coal until the bottom is reached. The proper regulation of the air through the holes before mentioned is a matter of much importance, and requires both judgment and experience in order to obtain the best results. So long as gas is given off, air is admitted for its combustion, but as this reduces in amount the holes are closed and the air cut off, until, when the flame has disappeared, and the oven reaches a stage approaching incandescence, the air-holes are closed and the

Fig. 1496.

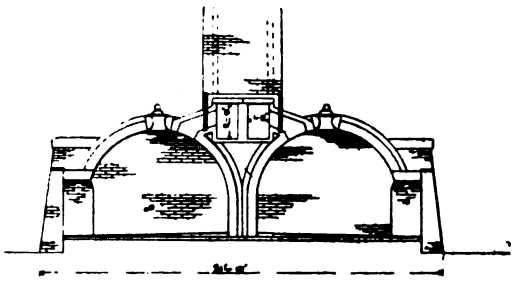

Fig. 1495.

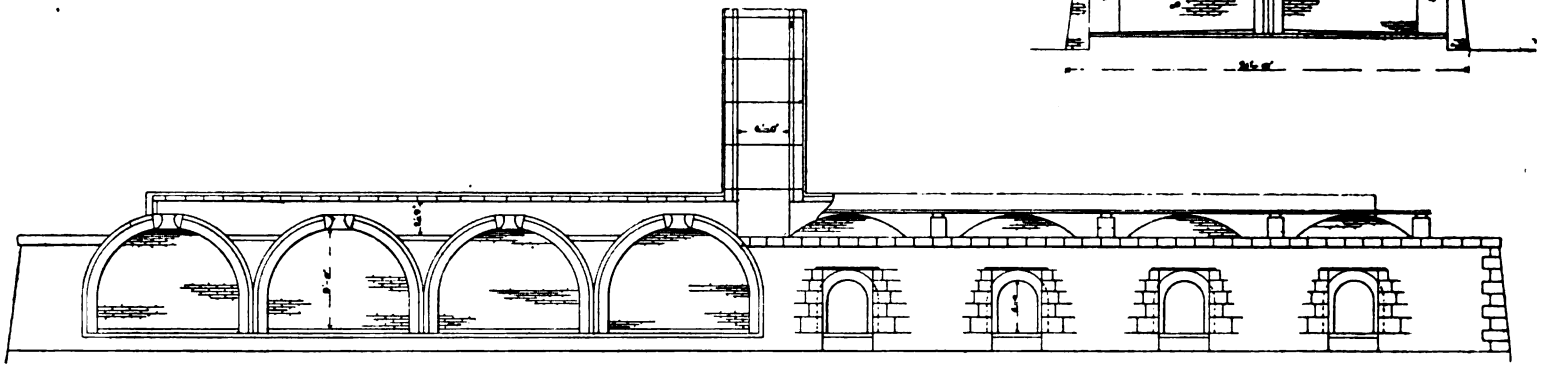

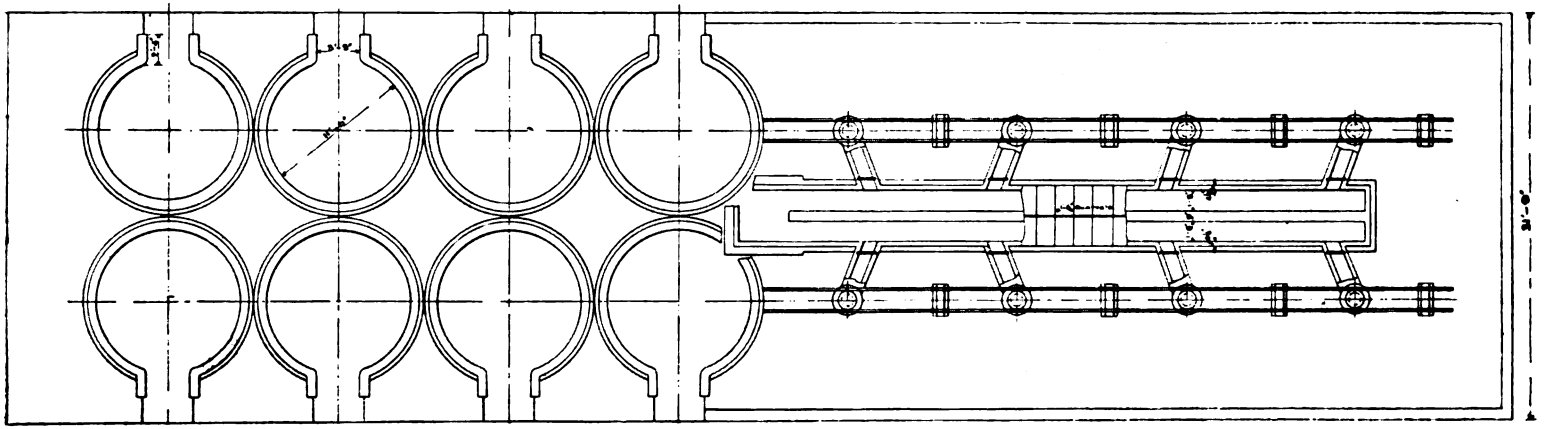

Fig. 1497.

Figs. 1495 to 1497.—Battery of Beehive Coke Ovens.

oven sealed up. It is now allowed to cool down, and after the lapse of a certain time, the doorway is pulled down, while the coke is still red hot, and finally cooled by watering by means of a pipe introduced through the doorway into the oven, after which it is drawn by a long rake on to a bench, from which it is filled into trucks.

Figs. 1480 and 1481 show the ordinary beehive oven with central flue, the ovens being interlocked to save space. They are set up upon an embankment of solid earth, with retaining walls which form the facing wall of the bench or wharf, and which is sometimes on a level or nearly so with the top of the trucks. The oven is charged from the top through the opening between the rails, which is afterwards covered with two semi-circular shaped lumps called half-moons. The doorway is built up of square lumps, level with the spring of the arch, and after the coal has been levelled the semi-circular top is built up by specially shaped lumps, leaving only the small air-holes before mentioned. The whole is then plastered over to make it as airtight as possible. The floor is made inclined, having a rise of about 7 in. from front to back of the oven.

Another arrangement with the ovens set back to back, which is the most usual plan, and the flue set higher up, is shown in figs. 1482 and 1483. Also, for the better retention of the heat, the dome is entirely covered, to the level of the railway, which is merely supported upon a wood sleeper instead of upon a brick pillar as in fig. 1480. All beehive ovens are constructed of special moulded bricks, details of those used in the construction of this oven being shown in figs. 1484 to 1494.

Another arrangement of ovens, with a square-shaped flue, and a common chimney, is shown in figs. 1495, 1496 and 1497, while another arrangement, which, however, is very seldom used, is that shown in figs. 1498, 1499 and 1500, where one chimney is provided for every four ovens.

The objection to the common oven is the great loss of heat, as when the coke is cooled in the oven the water absorbs the heat in the lower brickwork, and part of that in the dome, whilst all experience has shown that the oven ought to be kept as hot as possible. With the object of better heating the oven, and thus using to better advantage the heat given off by the volatile matter, the ovens are built with bottom flues, as shown in figs. 1501 to 1506. Here the main flue is placed on top of the ovens, but the "back eye" opens into a special downcast flue to a series of flues below the oven floor, which the gases traverse in the direction shown by the arrows and by means of two upcast flues to the main flue. Another arrangement is shown in figs. 1507 to 1511, which only differs from the preceding one by having a pair of "back-eye" flues, which conduct the gases first to the outer flues under the floor, leading to the main flue from the centre. A further improvement in the latter oven, however, is the air admission, which is admitted from the outside on a level with

Fig. 1498.

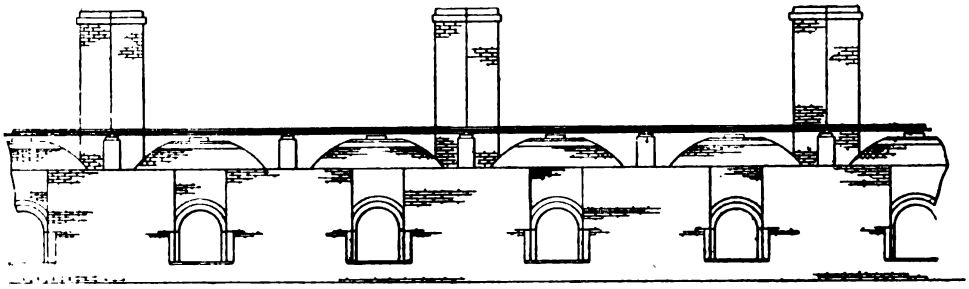

Fig. 1499.

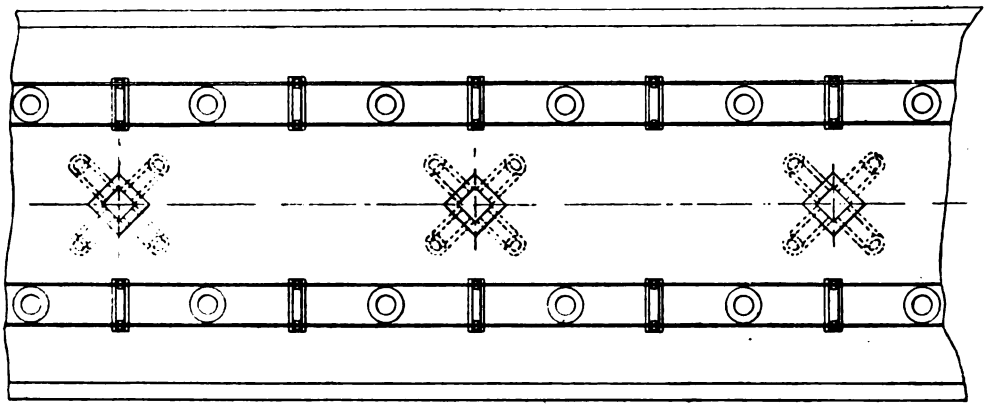

Fig. 1500.

Figs. 1498 to 1500.—Beehive Coke Ovens.

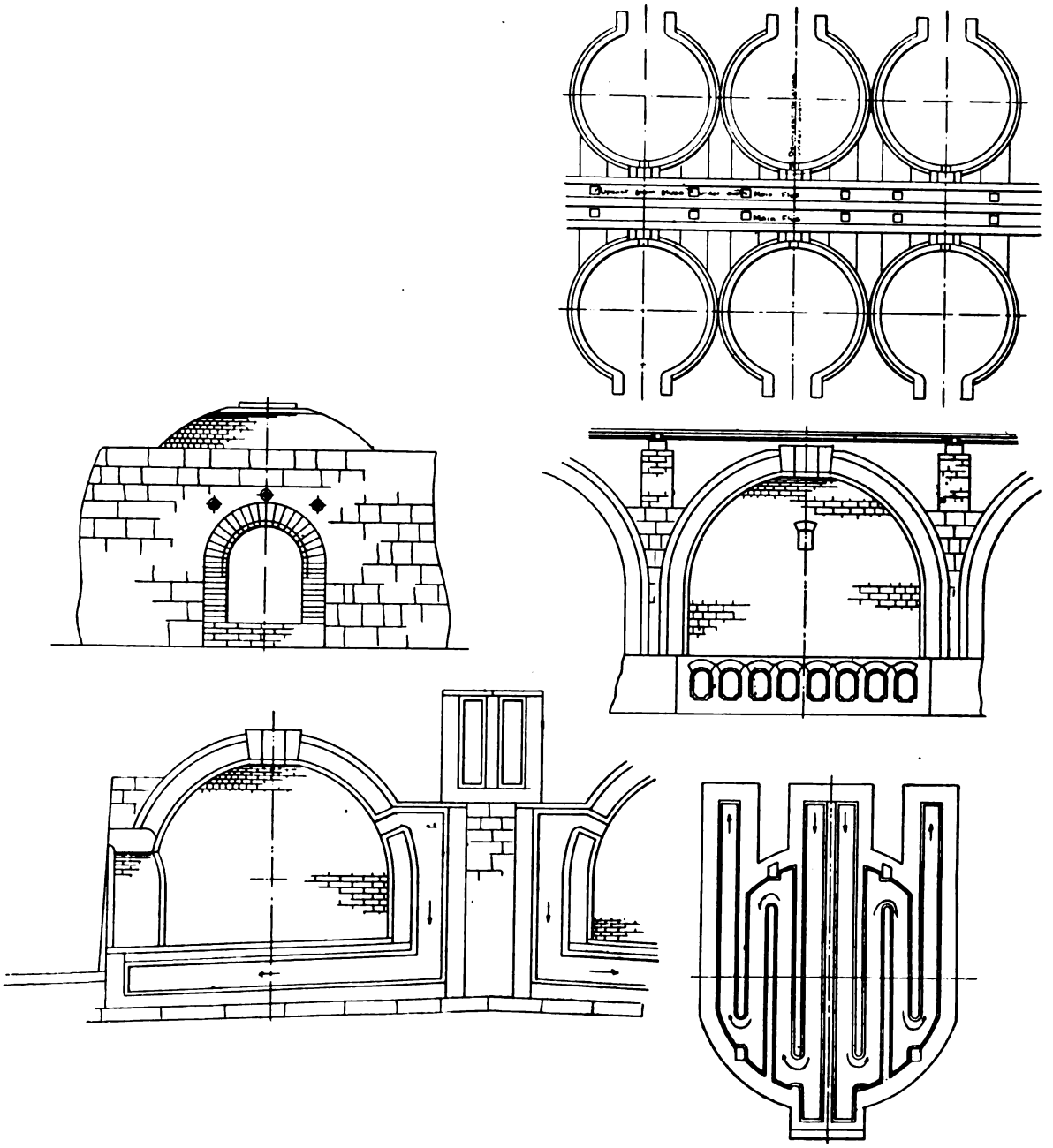

FIGS. 1501 TO 1506.—BEEHIVE COKE OVENS WITH BOTTOM HEATING FLUES.

the floor of the oven, and conducted by a flue to an opening on a level with the top of the charge, so that its temperature is raised before meeting the hot gases.

A further arrangement of ovens, in which the air is admitted from the exterior through a pipe placed around the dome with openings into the oven at different points in its circumference is shown in figs. 1512, 1513 and 1514. This terminates at the front with a special sighting nozzle in line with the "back-eye" for inspection.

The constructional details vary very considerably, some ovens being built wholly from specially-prepared bricks or blocks, others from ordinary bricks, and

Fig. 1508.

Fig. 1507.

Fig. 1511.

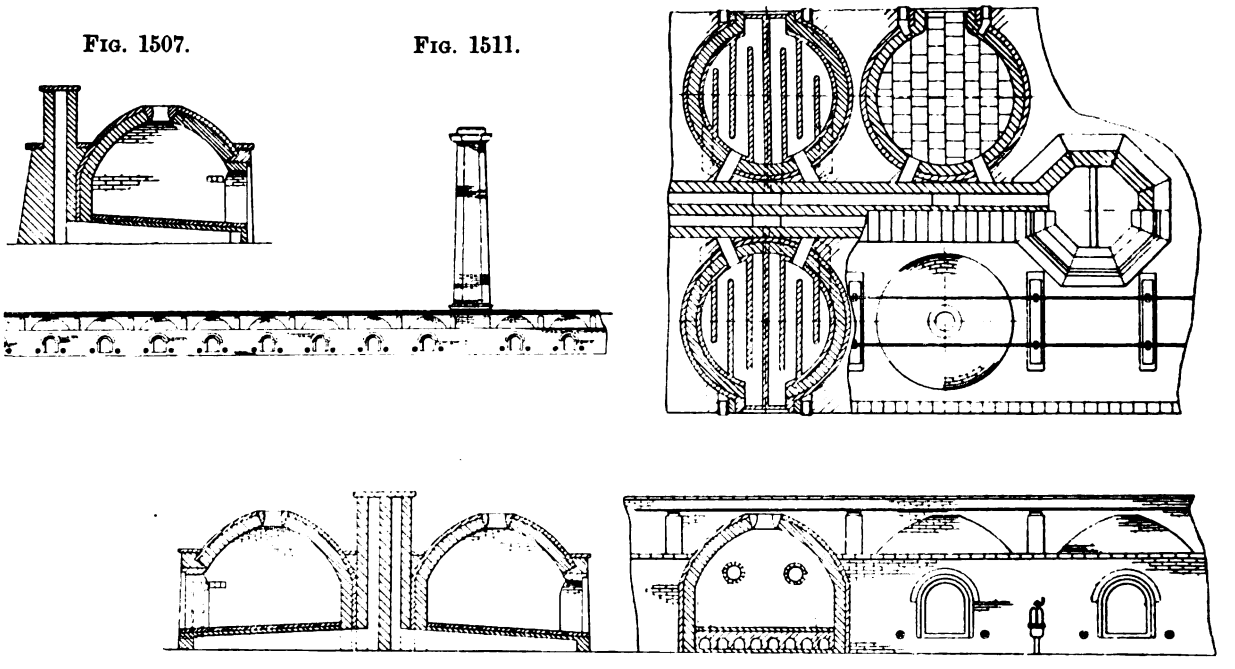

Fig. 1510.

Fig. 1509.

Figs. 1507 to 1511.—Beehive Coke Ovens with Heating Flues.

others with masonry fronts, the material being selected from whatever is cheapest in the district. The inside lining of the ovens, however, must be of the best ganister bricks, which are laid in mortar or clay similar to that of which the brick is made. The main point in the construction is to see that they are thoroughly and substantially built. The sill of the doorway is usually a strong cast iron slab about 1½ to 2 inches in thickness, and very often another cast iron slab or lintel is built in over the doorway arch, which allows the arch to be taken out and repaired

Fig. 1512.

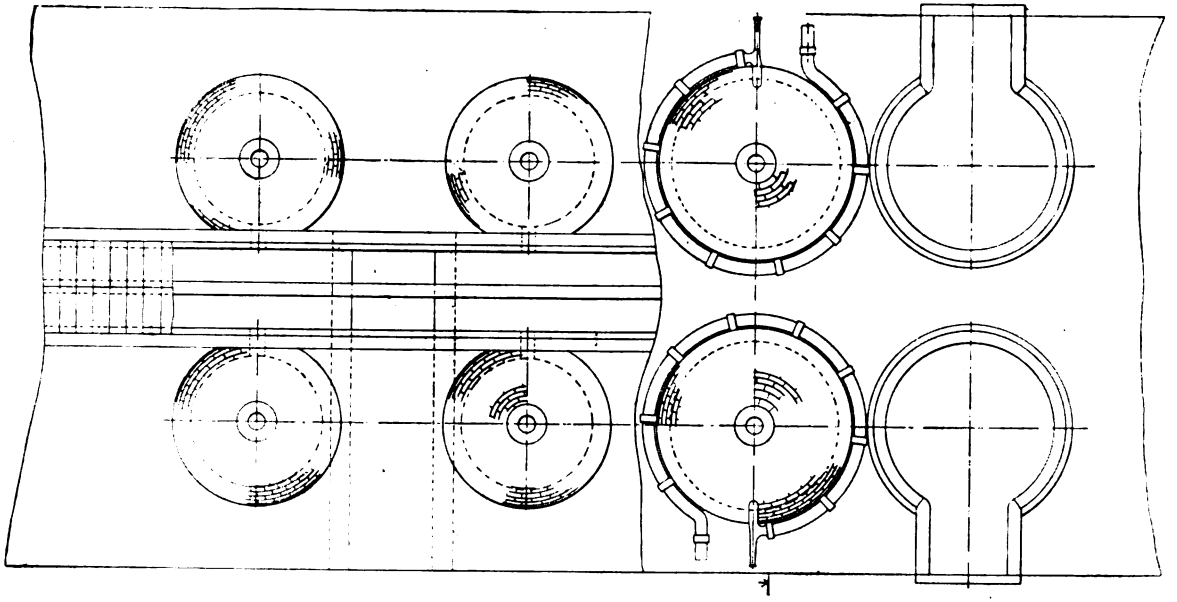

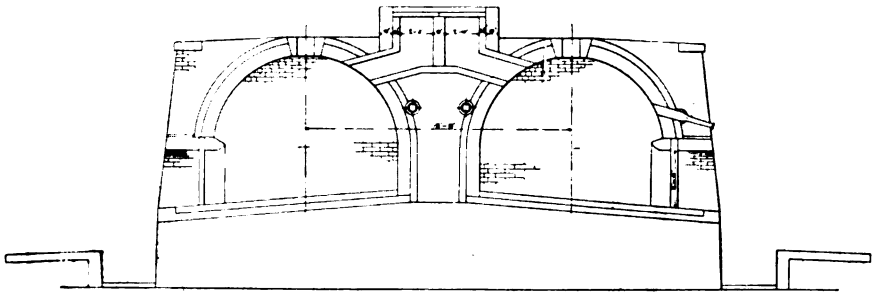

Fig. 1513.

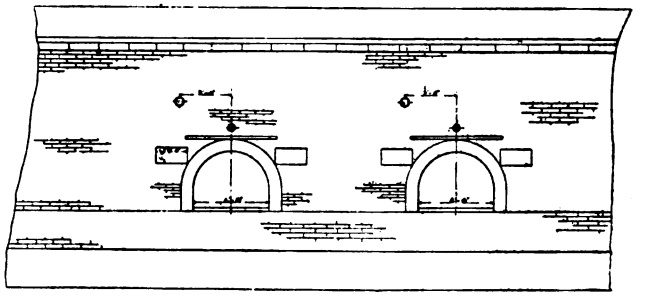

Fig. 1514.

without disturbing the brickwork above. In other cases the doorway consists of a cast iron frame, which abuts with the interior lining of the oven. Further details consist of a pair of hooks built into the front wall one on each side of the oven door, upon which is suspended by means of light chains, a crossbar upon which is mounted a sling with a small pulley for carrying the rake for levelling the coal and withdrawing the coke. A water main is also laid along the length of the ovens with branch valves between every pair of ovens, with a screw-down valve and nozzle, to which is attached a leather hose with an iron pipe about 2 in. diameter at the other end for watering the coke inside the oven. The coke is filled into the trucks from the benches by forks. Very often a half barrel of wood is also provided filled with water, in which the leather hose remains when not in use.

The ovens are charged twice a week, one consisting of a light charge occupying three days, and the other a heavy charge occupying four days which includes Sunday. The charges vary from 4 to 5 tons for the light charge and 6 to 7 tons for the heavy charge, according to the dimensions of the oven.

Instead of filling the trucks by hand, conveyors are sometimes arranged in front of the ovens, as shown in fig. 1515, which convey the coke to a loading station as shown in fig. 1516, both these being constructed by Messrs. Jos. Cook, Sons and Co. Limited. The coke is discharged into the wagon over a screen which removes all the small. Such conveyors, however, require to be particularly well constructed, and the roller journals should be long and run in dust-tight self-lubricating bearings.

The ovens are charged by means of hopper coal tubs, as shown in figs. 1517 and 1518 by Messrs. Jos. Cook, Sons and Co. They may be either square or round bodies, mounted upon an angle iron frame, fitted with a slide at the bottom and brake gear. In some cases a small locomotive is employed to run these tubs in sets of six or eight from the coal bunkers over the ovens. Figs. 1519 and 1520 show an electric-driven coke oven loading tub by the Jeffrey Manufacturing Company, as used in America, and worked by an overhead trolley wire. These wagons have a capacity equal to the oven, and will load from either side.

Many arrangements have been proposed and tried for drawing and loading the coke from these ovens by machinery, and in the United States of America several are in use. As a rule, these consist of a machine driven either by a small steam engine and boiler, or electric motor, mounted upon rails laid in front of the ovens, which works, by means of a rack and pinion, a rake, which may be used both for levelling purposes and drawing the coke. A more recent invention, however, consists of a machine driven by either steam or electricity, which pushes a ram having a wedged-shaped nose along the bottom of the oven, which raises and breaks up the coke and on the motion of the ram being reversed, withdraws it into a conveyor which is

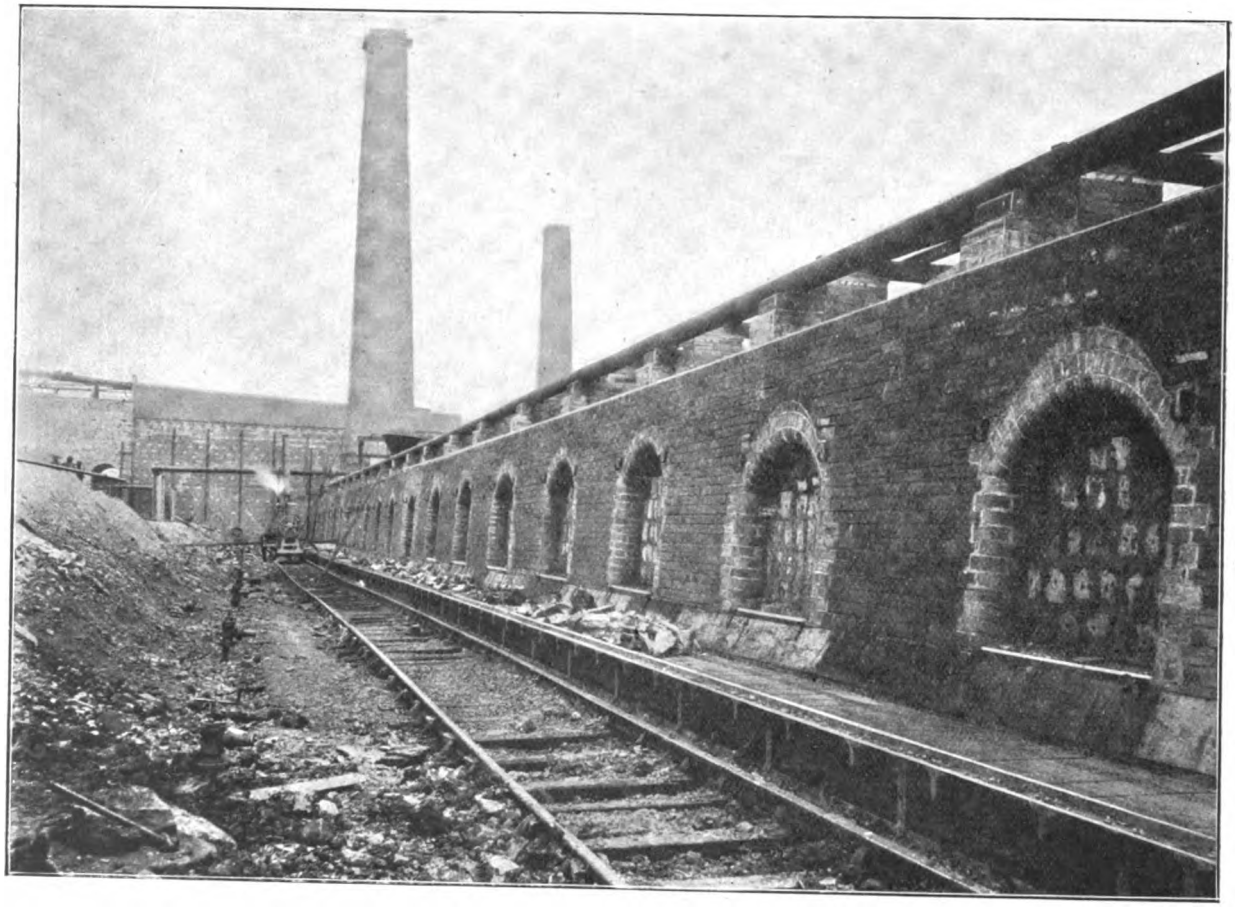

FIG. 1515.—COKE CONVEYOR.

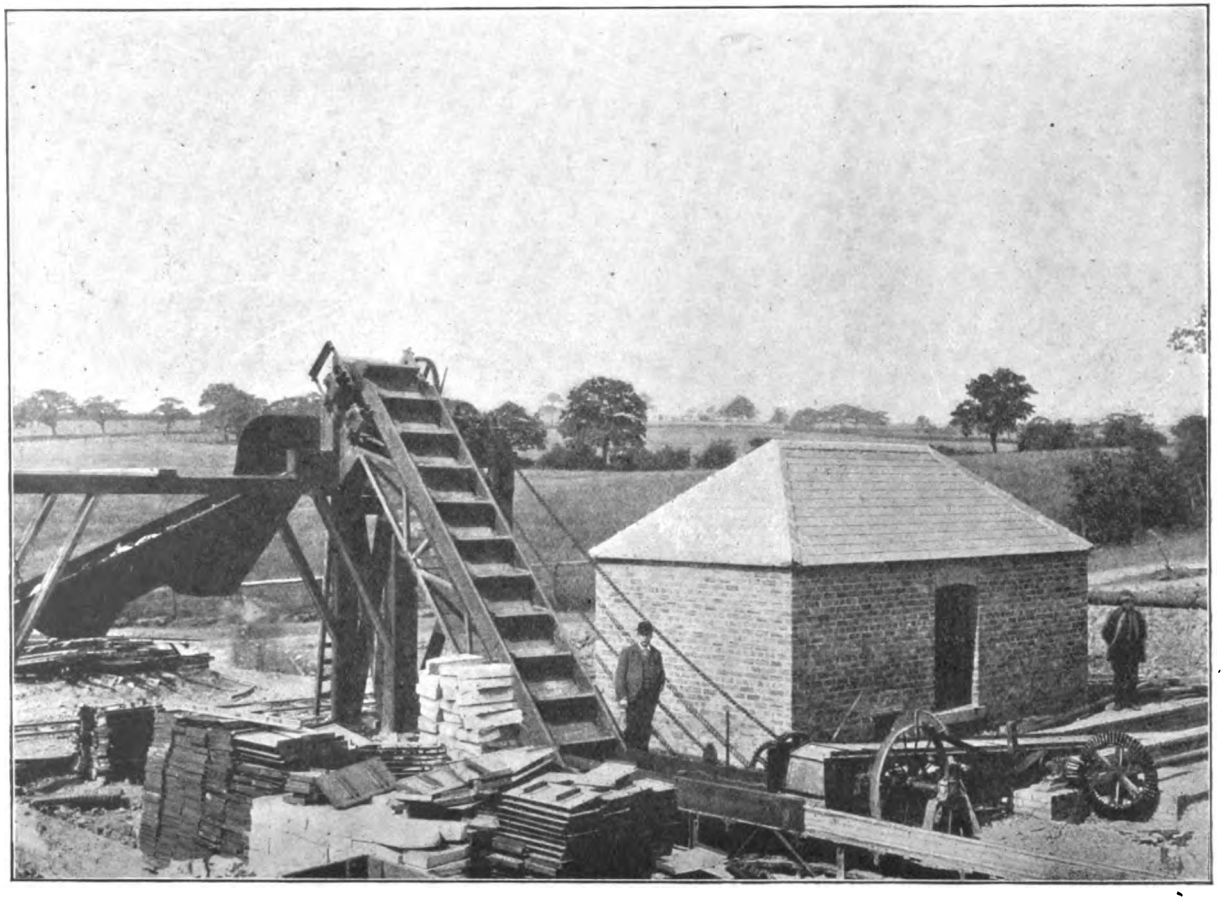

FIG. 1516.—COKE CONVEYOR AND SCREEN.

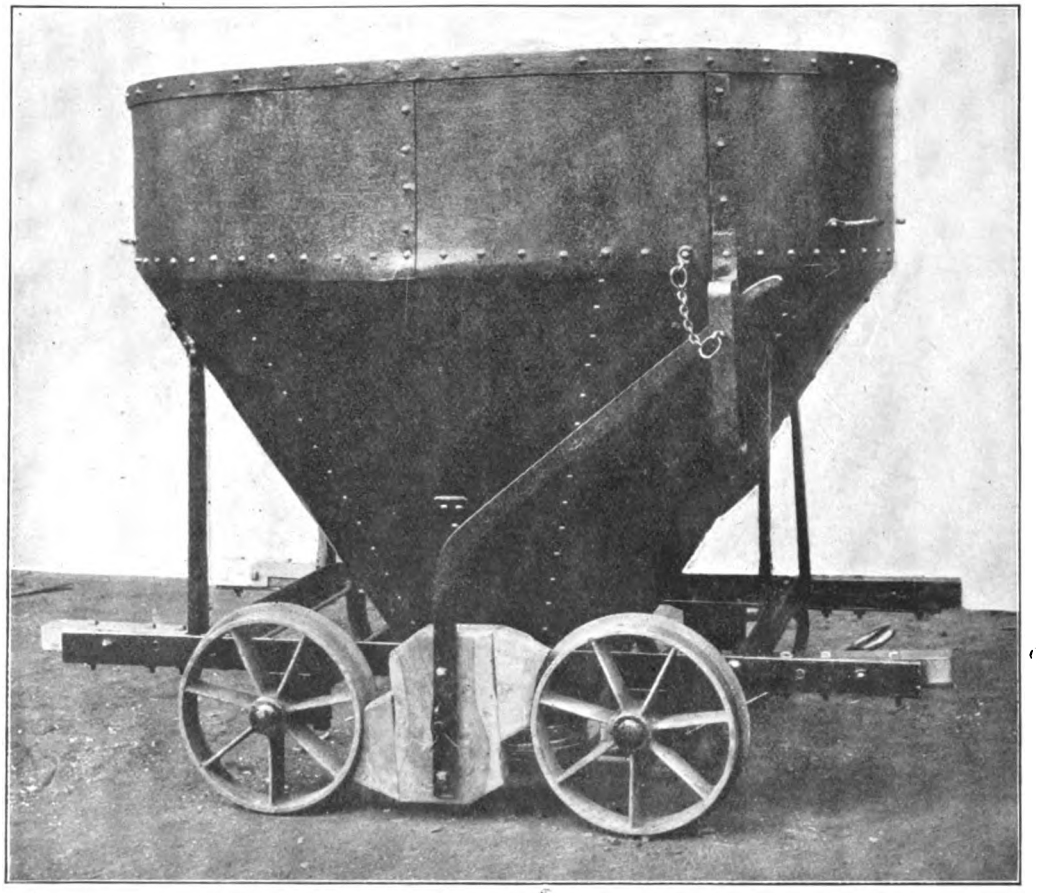

FIG. 1517.—COKE OVEN LOADING TUB.

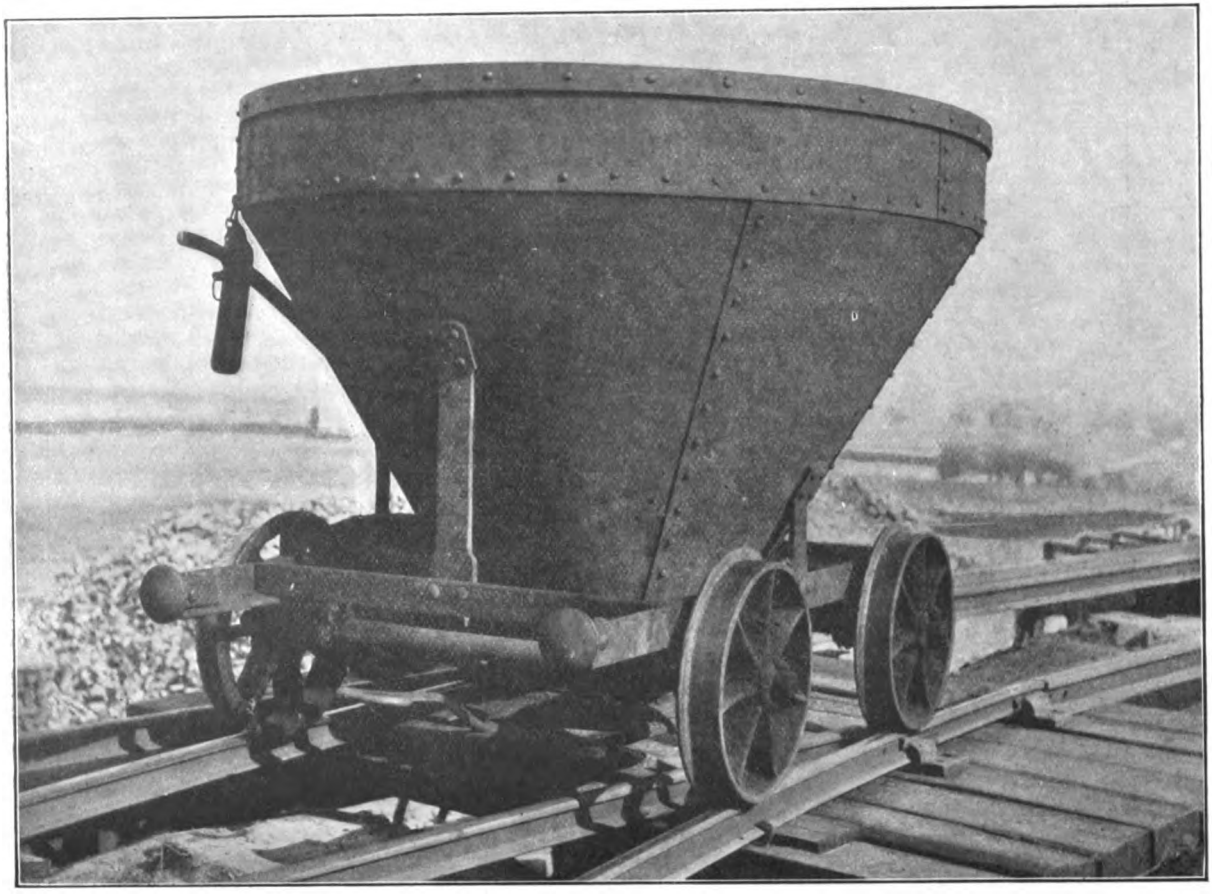

FIG. 1518.—COKE OVEN LOADING TUB.

part of the machine, by which it is delivered direct into the truck. There is, of course, no difficulty in designing machinery for this purpose, but considering the initial capital involved and cost of working and upkeep, it is only where labour cost is very high that there is any advantage in adopting such machinery.

The gases from the ovens are frequently led by main flues to steam boilers, and thence to the chimney, which should be placed in any convenient position near to. All the flues are lined with firebrick, and when square-shaped are frequently strengthened by iron rods and ties. Care should be taken to see that they are thoroughly airtight. Figs. 1521 to 1524 show an arrangement, taken from Mr. Forgie's evidence before the Royal Commission on Coal Supplies, of four Lancashire boilers heated by the waste gases.

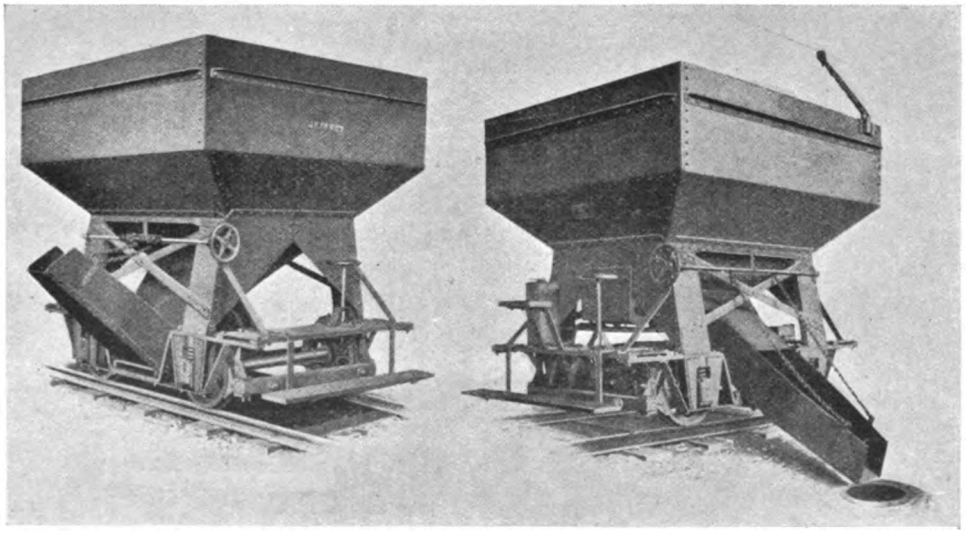

FIGS. 1519 AND 1520.—ELECTRIC-DRIVEN COKE OVEN LOADING TUB.

Probably most of the metallurgical coke manufactured both in this country and America is still produced in beehive ovens, and blastfurnace managers no doubt still have a decided preference for such coke over that produced in by-product ovens. Good blastfurnace coke must be uniform in quality, hard enough to withstand the weight of the charge in the furnace, have a well developed cellular structure, sufficient coherence to withstand transport and handling, and be quite free from all foreign matter.

At the same time, whilst it is very desirable that the coke manufacturer should meet the wants of the ironfounder, as far as possible, it must not be forgotten that the saving of valuable by-products is of national importance, and any system of coke

Fig. 1521.

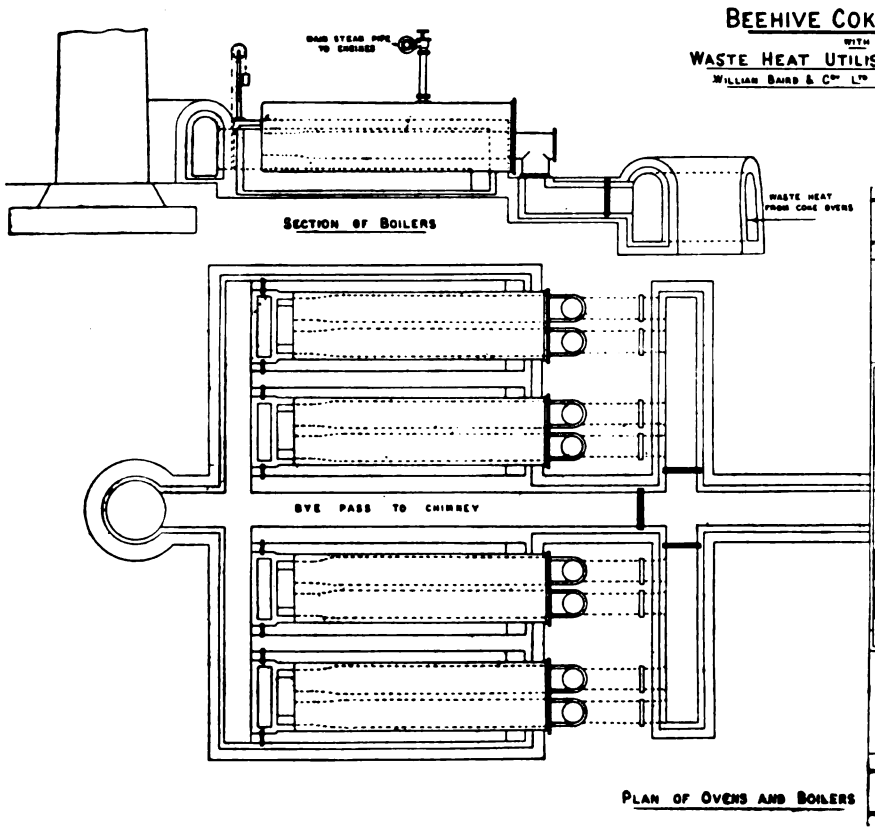
BEEHIVE COKE OVENS
WITH
WASTE HEAT UTILISED UNDER BOILERS
WILLIAM BAIRD & Co LTD KILSYTH SCOTLAND
SECTION OF BOILERS
WASTE HEAT FROM COKE OVENS
BYE PASS TO CHIMNEY
PLAN OF OVENS AND BOILERS

Fig. 1522.

Fig. 1523.

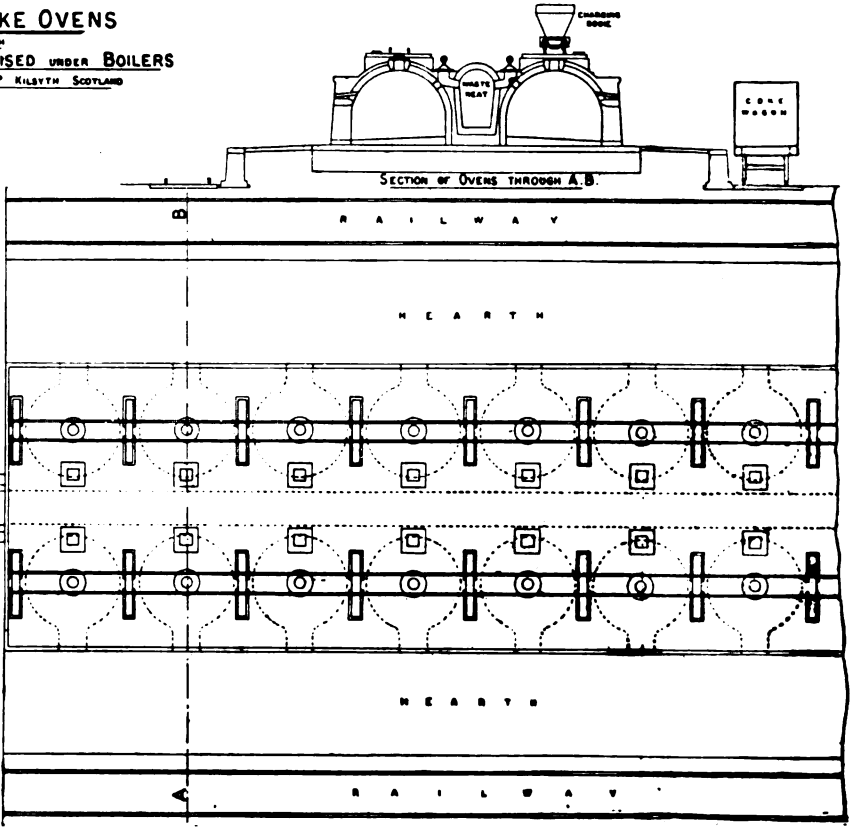

Fig. 1524.

Figs. 1521 to 1524.—Arrangement for Utilising Coke Oven Gas Under Boilers.

manufacture which will prevent what would otherwise be wasted, but without seriously impairing the principal product, must be adopted ; and this saving must be set off against any slight cause for complaint or sacrifice on the part of the iron-founder, for the benefit of the community at large.

Although beehive coke ovens are very much cheaper to construct, they have many disadvantages from the coke manufacturers' point of view, as compared with the by-product type of oven. They occupy more space for an equal output; the yield in coke from a given quantity of small coals is from 10 per cent. to 20 per cent. less; owing to the fact that the ovens are usually loaded, and drawn by hand labour, the cost of production is higher; the saving of by-products is troublesome and unsatisfactory, and there is further a great loss of "heat" which could be usefully employed for various purposes. It is also said the cost of maintenance and repairs is higher for the beehive oven than the retort oven. This, however, is questionable; it may be that owing to the greater efficiency in production in the latter, the retort oven may have the advantage on the basis of "cost per ton of coke made," but very much depends upon the selection of the material of which the ovens are constructed and careful supervision when building.

A really good retort oven must be designed with a view of maintaining the temperature as high as possible, and it may be taken as a general rule that the hotter the oven the better the coke. Further, this heat must be distributed evenly over the whole length of the oven, which is not an easy matter as is evident from the great variety of designs, and the rival claims on this question by each builder. The question as to whether horizontal or vertical flues gives the best results is a difficult one to answer, though in view of the fact that most builders with two or three exceptions, have adopted the vertical flue seems to indicate that the best results are to be obtained from this type, though this again depends very much upon the efficiency of the arrangement for controlling the admittance of gas and air for heating the flues.

Though many attempts have been made to obtain the by-products from ordinary beehive ovens, none appear to have been so successful as to warrant their adoption. The great objection to the by-product retort oven was mainly on account of the black appearance of the coke, instead of the silvery-grey lustre of that made in the beehive oven, and the initial capital cost. Many firms, however, undertook to build the ovens which were to be worked by the colliery company, who took the coke, while the coke-oven builders took the by-products in payment for a number of years, when the property was handed over to the colliery owners, who then took the profit from the by-products. One disadvantage, however—though this method of installing these type of ovens did much to

advance their popularity—was that at the end of the period when the property was to be handed over to the colliery company, the ovens required very extensive repairs, which absorbed a good portion of the profits from the by-products, and this system of profit-sharing is not one to be recommended when new ovens are to be installed. To prevent repairs the ovens must be carefully and thoroughly well built, of the very best materials, and, whereas clipping initial expense when dealing with any description of colliery plant usually means to be "penny wise" and "pound foolish," with coke ovens it is particularly so.

The by-product oven is really a "retort" externally heated, and is usually a long narrow rectangular-shaped oven with a door at each end. The side walls are kept as hot as possible. The coal is charged at the top through small openings, when ordinary dry coal is used in the same way as the beehive oven, but when the coal is compressed it is charged into the oven by the charging machine at one end. When charged from the top, the coal has to be levelled evenly for the full length of the oven, which is usually done by a rake at the end of a long rack operated by the "coke pusher" or discharging machine. When fully charged the charging holes and end doors are sealed and the top of the oven put in communication with the gas main, and the gas drawn off as it is generated by the heat of the oven. The coking process commences at each side next to the hot wall, and goes on through the coal to the centre, with the result that on being pushed out of the oven on to the coke bench it falls into halves, as though split down the centre. Another advantage claimed for coke made in these ovens is that owing to the pressure due to the weight of the charge the density is increased, and is very much more so in cases where the coal is compressed into a large cake before being charged into the oven.

Whilst there are no doubt many advantages resulting from compressing the coal for coking, principally that of greater yield per oven, it must not be supposed that compressing is desirable or necessary in all cases. One very serious objection to compressing is that the coal must contain some 10 to 12 per cent. of moisture, which not only is detrimental to the oven walls by its cooling action, but the whole of this moisture must be driven off before coking commences, and further has to be dealt with in the by-product plant. With direct recovery of the by-products, it is very desirable that the coal be charged into the oven as dry as possible, even to the extent of putting washed coal through some form of drying apparatus previous to charging into the oven.

Figs. 1525 to 1530 show sectional views of the Simon-Carves oven, as built by Messrs. Simon-Carves Limited, which is one of the oldest known by-product ovens. Originally it was of the horizontal flue type, but in the latest improved type of oven as shown it is now vertical. As it is most important

that the structure shall be erected upon a firm foundation, the Simon-Carves oven is built upon a strong concrete foundation as shown. Each oven is 32 ft. 9 in. long, 8 ft. 2 in. high, and 20 in. to 22 in. in width, and is formed by the partition walls containing the heating flues, as shown in the sections, figs. 1525 to 1530.

In the coke oven with regenerators, figs. 1525, 1526 and 1527, the coal is charged into the oven, which in ordinary working is heated to a high temperature, either from "small" tubs or "lurries," through the holes 60, as shown, the doors being sealed.

If the ovens are cold, fires are started inside the coking chamber against the two doors, and the hot products of the combustion are collected through the apertures 60 and led through openings 61 into channels 62 (fig. 1525), from which they are distributed by means of ports 63 into the horizontal flue 27 and down the vertical flues 12 and 12*a*, thus heating up the brickwork, and escape through the openings 13 and 13*a*, through the flues under the sole, and down the regenerators 14 and 14*a* which are then acting as waste gas flues. When the brickwork of the ovens is hot enough to cause the coal to distil, the openings 61 are closed and the oven charged with coal, and coking commences.

The effect of distillation of the coal is to drive off the volatile matter, or gas, which ascends through ascension pipe 64 and passes through the isolating valve 65 into the main gas collector 66. It is then passed through the cooling and washing plant by the aid of mechanical exhausters and fed back to the oven through gas pipe, 1, and alternately fed by means of gas taps 19 through the distributing boxes 38 and 38*a*, provided with the necessary taps for the gas channels 2, 3, 4, 5 and 6 leading into the sections 7, 8, 9, 10 and 11, which are correctly proportioned to give the required supply of gas to each set of vertical flues. This gas meets the air at point 13 about the level of the sole of the oven, where combustion takes place.

The air for combustion, after first traversing through the regenerator 14, rises through the ducks 15 (fig. 1526) into the distributing chamber 16, feeding the compartments 20, 21, 22 23 and 24 through the horizontal channels 17 and 18 and two other parallel channels placed alongside, and shown at 29 and 30 in fig. 1527.

These compartments correspond with the gas sections 7, 8, 9, 10 and 11, and are connected to them by the openings 13 before-mentioned. The supply of air which is allowed to pass along the horizontal channels is regulated by dampers 25 inserted in these channels, through the openings 26 in front of the oven and which are closed with removable plugs. The regulation of the gas, and the air required for its combustion, is thus entirely effected from the outside of the ovens and under the control of the responsible person; and after the final regulation is effected the taps and openings can be sealed to prevent further tampering.

The flames resulting from the combustion of the gas rise in the vertical flue 12, pass along the horizontal flue 27, and descend the vertical flues 12*a* and through the openings 13*a* into chambers 24*a*, 23*a*, 22*a*, 21*a*, and 20*a* (fig. 1526), and thence into channels 29*a* and 30*a* and two other parallel channels 17*a* and 18*a* placed alongside, shown in fig. 1527, leading into chambers 16*a* and down duct 15*a* into regenerator 14*a*, heating the chequered brickwork and passing into the waste gas flue, along which they travel to the chimney.

When the chequered brickwork in the regenerator 14*a* has been sufficiently heated, and the air passing along regenerator 14 has extracted the heat from this regenerator within the prescribed limits, the whole arrangement is reversed, the gas being fed into the sections 7*a*, 8*a*, 9*a*, 10*a*, and 11*a* by means of channels 2*a*, 3*a*, 4*a*, 5*a*, and 6*a*, as previously described for the other side of the oven, burning with the air at point 13*a* and rising in the flues 12*a*, travelling the horizontal flue 27 and descending the vertical flues 12, passing through openings 13 into compartments 20, 21, 22, 23, and 24, and along the channels 17 and 18 and the other two channels 29 and 30 placed alongside, and shown in fig. 1527 into the regenerator 14. The air for the combustion now traverses along regenerator 14*a*, rising through duct 15*a* into distributing chamber 16*a*, and is fed into compartments 20*a*, 21*a*, 22*a*, 23*a*, and 24*a* as previously described for the other side of the oven.

The reversing arrangement consists of a set of dampers actuated in pairs on the regenerators, alternately shutting off the waste gas at one end and admitting the air at the other by a winch at the end of the battery. The gas is supplied alternatively to either side of the oven by a set of three-way gas taps 19, one to each oven, actuated by the same winch.

The great advantage of this type of vertical-flued oven is that in each flue the amount of gas and air admitted for the combustion of the same can be accurately and easily regulated without any inconvenience to the operator. Spy holes being provided at seven points—51, 52, 53, 54, 55, 56, and 57 on each side of the battery—the process of combustion is always under direct observation and control from the outside of the oven.

Dampers 59 (fig. 1526), one at each end of oven, which are regulated through openings 58, control the draught in the oven and permit shutting down in case of repair. Fig. 1526A shows how these dampers are regulated by means of a pair of tongs.

Figs. 1528, 1529 and 1530 illustrate the Simon-Carves oven as constructed without the regenerator. These ovens are charged from the top in exactly the same manner as the foregoing, as shown in fig. 1529, and the ovens started by fires in the coking chamber as previously described, and the hot products of com-

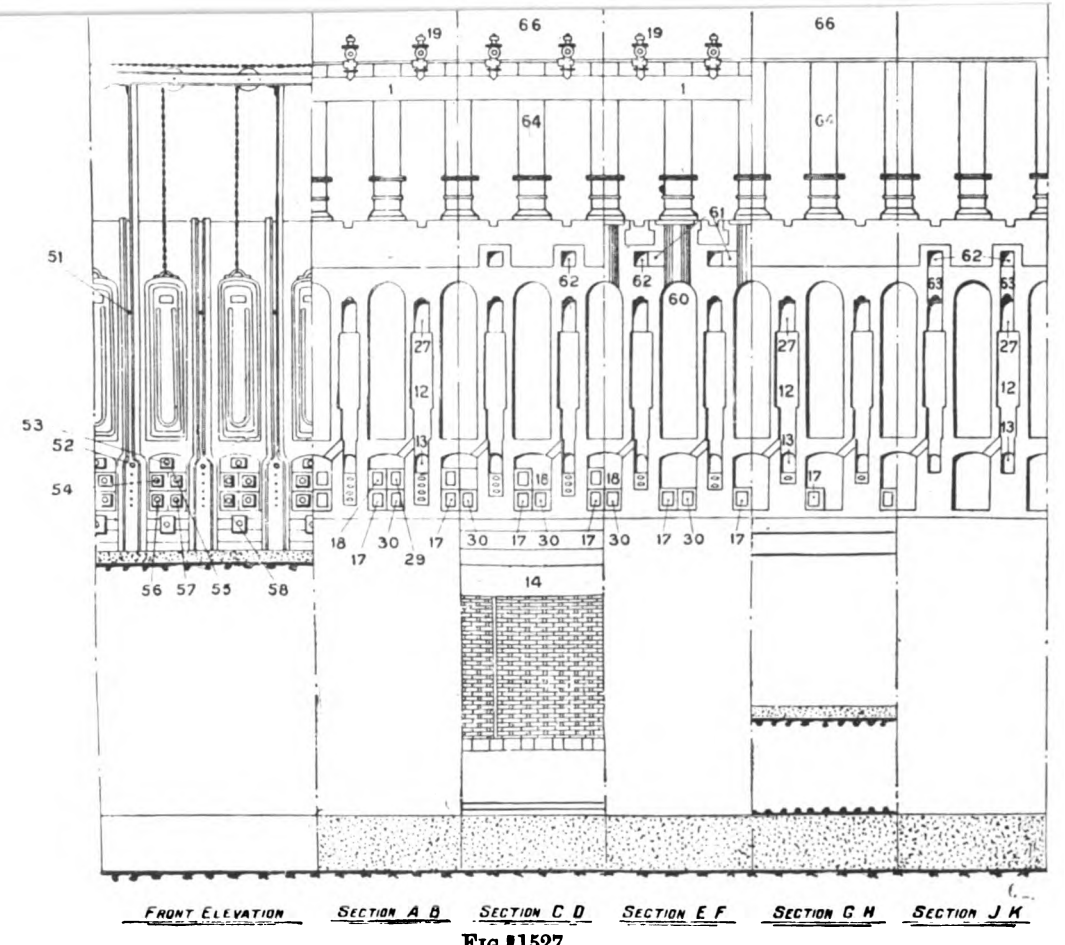

FIG. 1527.

FIGS. 1525 TO 1527.—SIMON CARVES COKE-OVENS WITH REGENERATORS.

PLATE CXXVI.—(*To face page 718*).

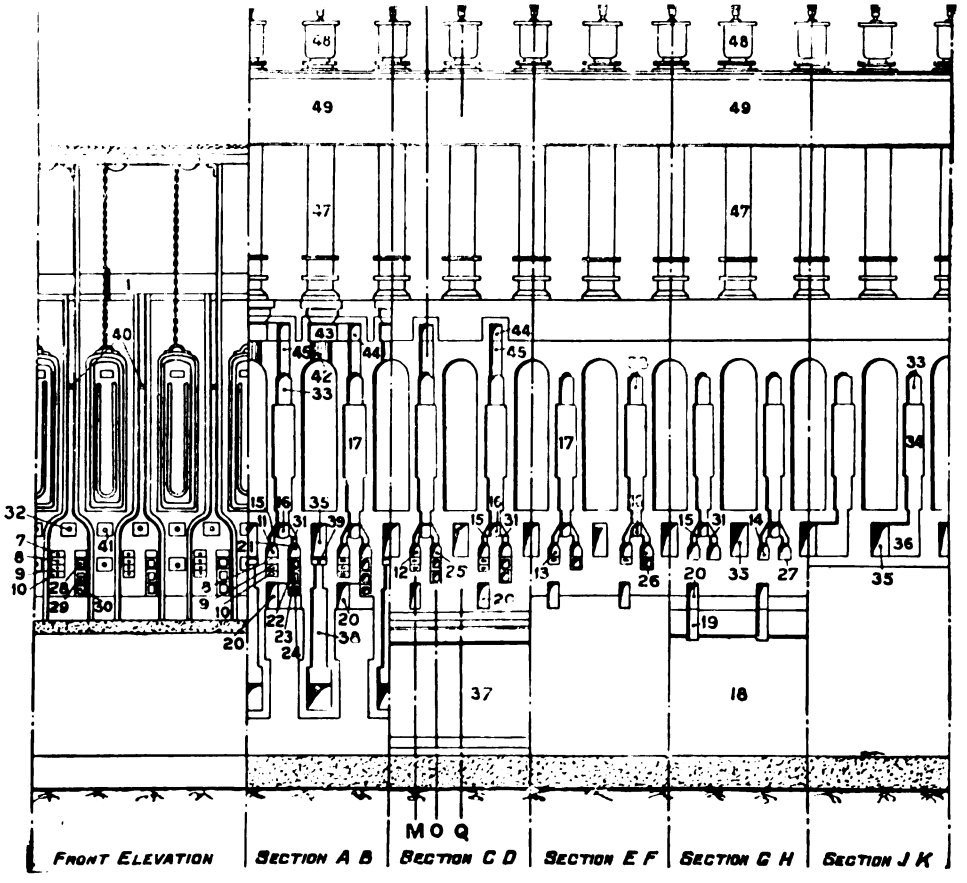

FIG. 1530.

FIGS. 1528 TO 1530.—SIMON-CARVES COKE OVENS WITHOUT REGENERATORS.

UNIVERSITY OF CALIFORNIA

bustion are collected through apertures 42 formed through the arch of the coking chamber and led through flues 43 and 44 and the distributing ports 45 into the vertical heating flues of the walls 17. By means of the temporary dampers 46 inserted in horizontal flue 33, the hot products of the combustion from the fires travel down the eight first flues 17, along the combustion chamber 16, rise up through the five next flues 17, and then down the centre flues 34 to the sole flues 35, and thence to the waste gas flues 37. When the brickwork of the oven is

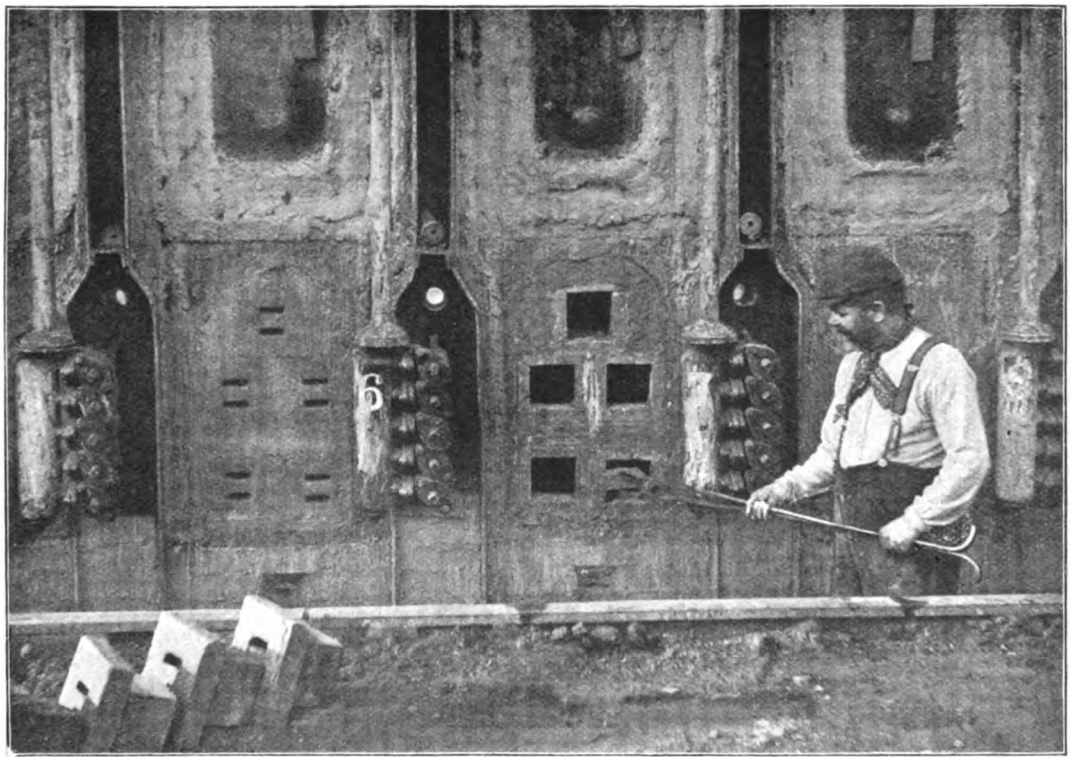

FIG. 1526A.—REGULATING THE AIR DAMPER.

hot enough to cause the coal to distil, the openings 42 are closed with a special cover, and temporary dampers 46 withdrawn. The oven is then charged with coal for coking.

During the carbonisation of the coal charge in the coking chamber the gas evolved ascends through the ascension pipe 47 and passes through isolating valve 48 into the main gas collector 49. It then passes through the cooling and washing plant with the aid of mechanical exhausters, and is fed back to the oven through gas

pipes 1 as already described The gas is brought in pipe 1 and fed through distributing box 2 provided with the necessary taps 3, 4, 5 and 6 to the gas channels 7, 8, 9 and 10 leading into the compartments 11, 12, 13 and 14. The taps 3, 4, 5 and 6 distribute the required amount of gas in each of the flues 7, 8, 9 and 10, from which it passes through apertures 15 to the combustion chamber 16 situated at the base of the vertical heating flues 17. There is one aperture 15 under each heating flue 17.

The air for the combustion, after travelling through the air galleries 18 in the foundations of the battery, where it receives a preliminary heating, passes through apertures 19, one for each half of each oven, and through flue 20 into the air-distributing chamber 21 represented at the right-hand of the drawing. From this air-distributing chamber the air passes through the flues 22, 23, and 24 into compartments 25, 26 and 27 corresponding to gas compartments 12, 13 and 14, and to the top of the distributing chamber 21, corresponding to gas compartment 11. The amount of air is regulated in each of these compartments by dampers, or stoppers, of different thicknesses introduced from the outside, into air channels 22, 23 and 24 through plug holes 28, 29 and 30. The air from each compartment passes through the apertures 31 into the combustion chamber 16, where it meets the gas as explained above, and combustion takes place. There is one aperture 31 under the heating flue 17.

The flames resulting from the combustion of the gas rise into flues 17, are collected into horizontal flue 33 situated at the top of the oven, and then carried down through the centre flues 34 to the flue under the sole of the oven 35 through ports 36, fig. 1529. The sole flue conducts the burnt gases to the waste gas flues 37 (one on each side of the battery) through the downtakes 38. The waste gas flues 37 lead the hot burnt gases to the boilers, where they can be utilised for raising steam on their way to the chimney.

Spy holes 32, 40, and 41 on each side of the battery allow for easy inspection through the flues, and permit an accurate control of the combustion of the gases, and the whole length of the combustion chamber 16 is visible from spy hole 32. Dampers 39 (one at each end of the oven) regulate the draught in each oven, and allow of the shutting off in case of repair.

Each end of the oven is closed by a door provided with a thick lining of firebrick. They are lifted by means of a continuous overhead framing and horizontal bar, and their weight is counterbalanced by a counterweight at one end of the battery, so that one man can easily operate them.

The dimensions of the oven allow for a charge of about 11½ tons of compressed wet coal, the weight of moisture being about 10 per cent. This amount of moisture appears to be necessary for the coal to remain in a caked condition for charging.

During carbonisation, the gases, as previously mentioned, pass into the gas main, and are drawn, by means of exhausters, through a powerful condenser for the purpose of still further condensing and cooling them, and which reduces them to about 75 degs. Fahr., at which temperature they pass through the exhausters, from the suction side to the pressure side, and are then forced through a tar extractor to remove all tar fog, and then on to a scrubbing plant for the extraction of the ammonia and benzol.

All the tar and ammonia liquor condensed in the cooling and condensing plants is collected by separate drains from each apparatus and conveyed to a deposit tank; from this it is pumped to a decantation tank, where the tar and ammonia liquor are allowed to separate into two layers, due to the difference in specific gravity, the tar naturally forming the lower stratum and the ammonia liquor the upper. This lower stratum of tar is then drawn away by decantation into a tar storage tank, and finally pumped from this tank into an elevated tar tank for filling of railway tank-wagons.

The upper stratum of ammonia liquor in the decantation tank overflows at the top into one of the seal-pots in connection with the ammonia scrubbers, passing on its way through a liquor cooling coil. This ammonia liquor thus becomes incorporated with that which is circulating through the scrubbers. The last of the series of ammonia scrubbers is supplied with fresh water sprinkled over the wood filling by special irrigators, which trickles down against the ascending gas, and escapes at the bottom into the seal-pot attached to the next scrubber in the series. This liquor is then pumped away and made to circulate over the wood filling of the last but one scrubber, and afterwards overflows from the seal-pot to that attached to the scrubber next in the series, and circulated by means of another pump over the wood filling of this scrubber; and so on through the complete set of ammonia scrubbers, thus becoming richer in ammonia. The strong ammonia liquor from the first scrubbers (*i.e.*, the scrubber receiving the gas from the tar extractor) overflows from the seal-pot into a strong ammonia liquor storage tank, from which it is pumped to an elevated ammonia liquor storage tank, and delivered to the sulphate of ammonia plant.

The strong ammonia liquor from the elevated tank is conveyed through a pipe to the heater in the sulphate house, where the same passes through a series of pipes heated by the hot gases coming from the saturator. From this heater the liquor passes through a superheater heated by steam, and then to the top tray of the ammonia still, falling gradually from tray to tray until it arrives at the bottom of the first, or free, ammonia still, and during its descent it meets an upward flow of steam which is caused to bubble through the liquid on the various trays, thus driving all "free" ammonia out of the liquid. In the bottom portion of the

ammonia still the liquid is mixed with milk of lime and overflows in the second portion of the still, where the mixture falls from tray to tray, meeting another upward current of steam, which boils the mixture of lime and ammonia water, thus liberating all the "fixed" ammonia, the spent liquor overflowing through an automatic outlet to the settling ponds or other place of disposal for the same. The ammonia gas and steam rising up to the top of the still escapes through an outlet pipe and is conveyed into a saturator, in which the ammonia gas is caused to combine with sulphuric acid to form a salt of sulphate of ammonia. As this formation of salt proceeds, the same crystallises from the liquid and falls to the bottom of the saturator box, and is lifted by a salt elevator and thrown on to a draining table, where all superfluous acid is separated from the salt and runs back into the saturator. The salt is afterwards shovelled from this draining table into the basket of a centrifugal dryer, where the same is thoroughly dried and then thrown out into the salt store-room ready for sale.

Where a benzol plant is installed, the benzol is extracted from the gas by means of specially-prepared heavy tar oils circulated through a series of scrubbers in a manner similar to that for the extraction of the ammonia, the rich oil containing the benzol being ultimately collected in a large storage tank.

To extract the benzol from the heavy tar oils which have been circulated in the benzol scrubbers, the same is subjected to a distillation process similar to the ammonia liquor, and the vapours condensed in water-cooled apparatus. The crude heavy oil after being freed of the benzol is passed through a cooling serpentine and again put into circulation.

Figs. 1531 and 1532 show the by-products plant, and gas and oil-cooling plant respectively, while figs. 1533 and 1534 show two general arrangements of coke ovens and by-products plant, the latter showing the coke bench extended over the railway lines, the coke being loaded into the trucks through the holes in the bench.

Messrs. Simon-Carves were amongst the first to recognise the advantages resulting from compressing the coal, though it does not follow that it is necessarily always advantageous to compress the coal; indeed, the reverse is often the case, as previously mentioned, but compressing has the advantage, where it can be adopted, of increasing the density of the coke, and thus enhancing the output from each oven, by from 15 to 20 per cent. It is also claimed that inferior or ordinarily non-coking coals can be successfully coked by first compressing, and there is now no doubt that the coal which ordinarily cannot be coked in a beehive oven can be coked in suitable retort ovens. The yield from an ordinary beehive oven may be taken as 58 to 60 per cent., which may be increased to 65 per cent., in properly constructed bottom-flued ovens. The yield of the retort oven, however, will be from 68 to 70 per cent., depending upon the quality of the coal.

LIBRARY OF THE UNIVERSITY OF

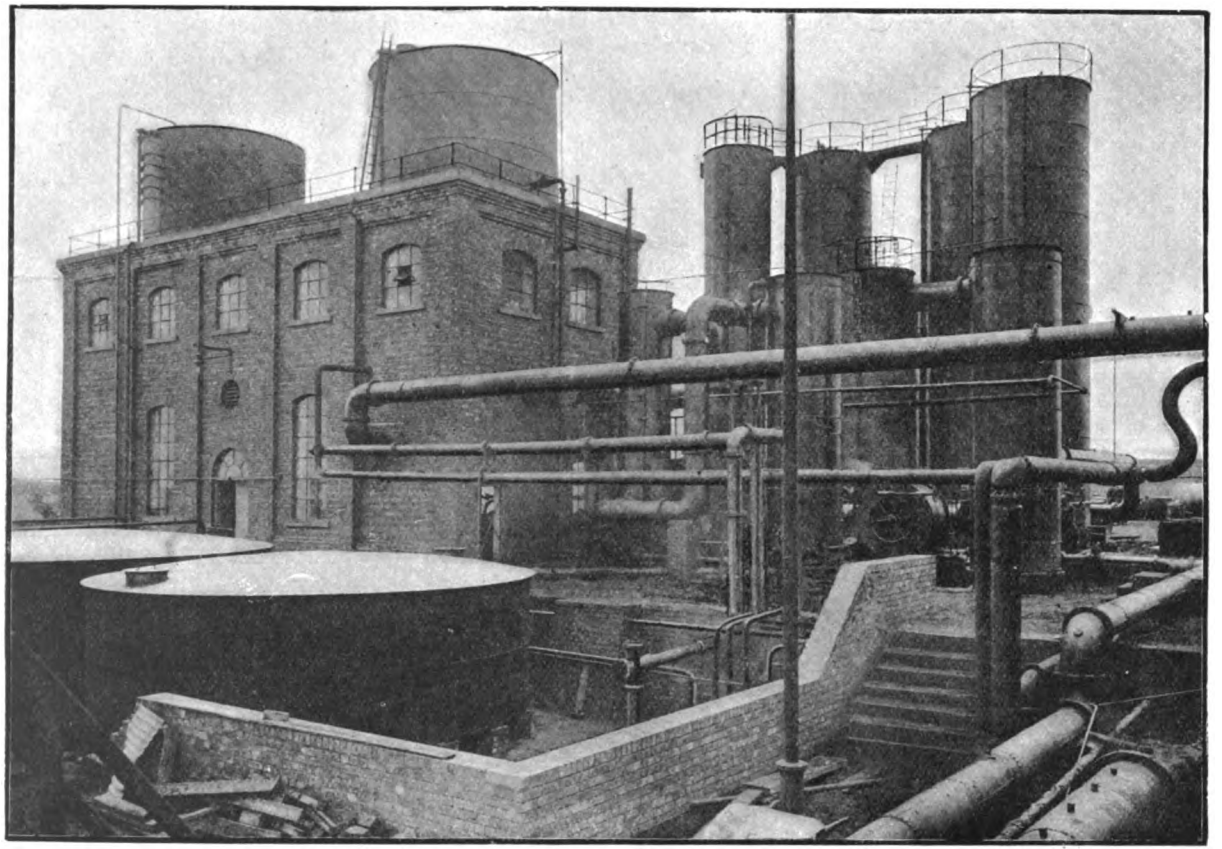

FIG. 1531.—BY-PRODUCTS PLANT.

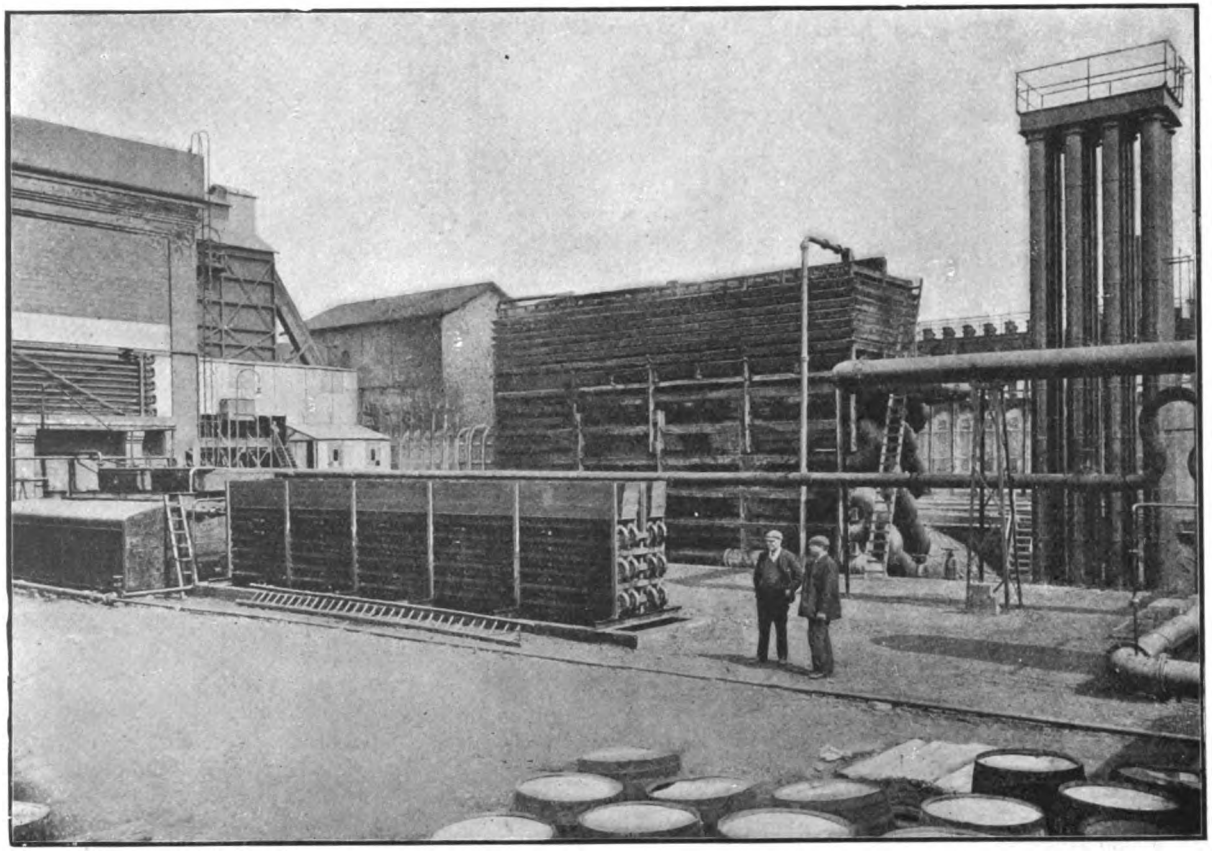

FIG. 1532.—GAS AND OIL COOLING PLANT.

PLATE CXXVIII.—*(To face page 724).*

LIBRARY
OF THE
UNIVERSITY

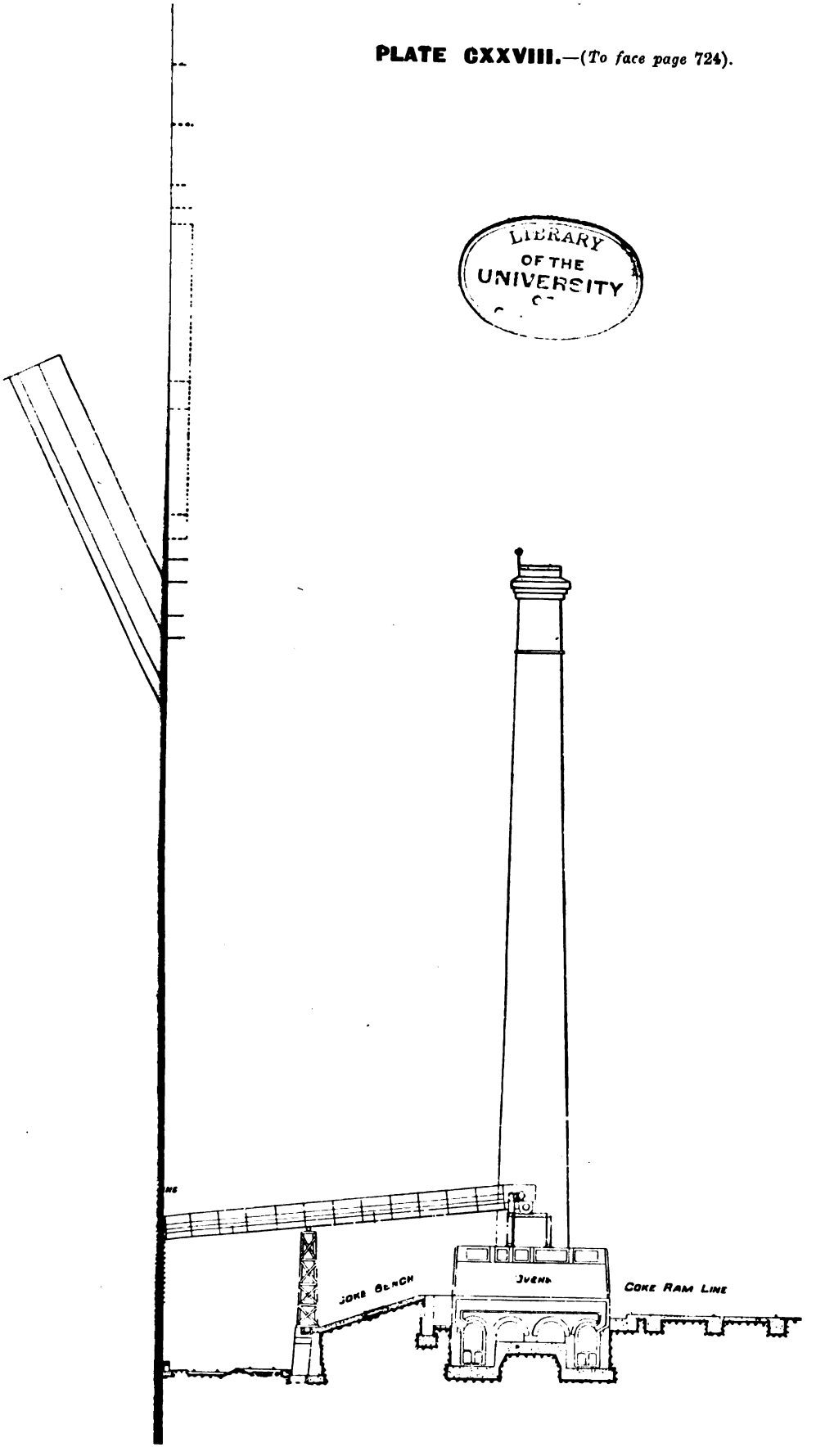

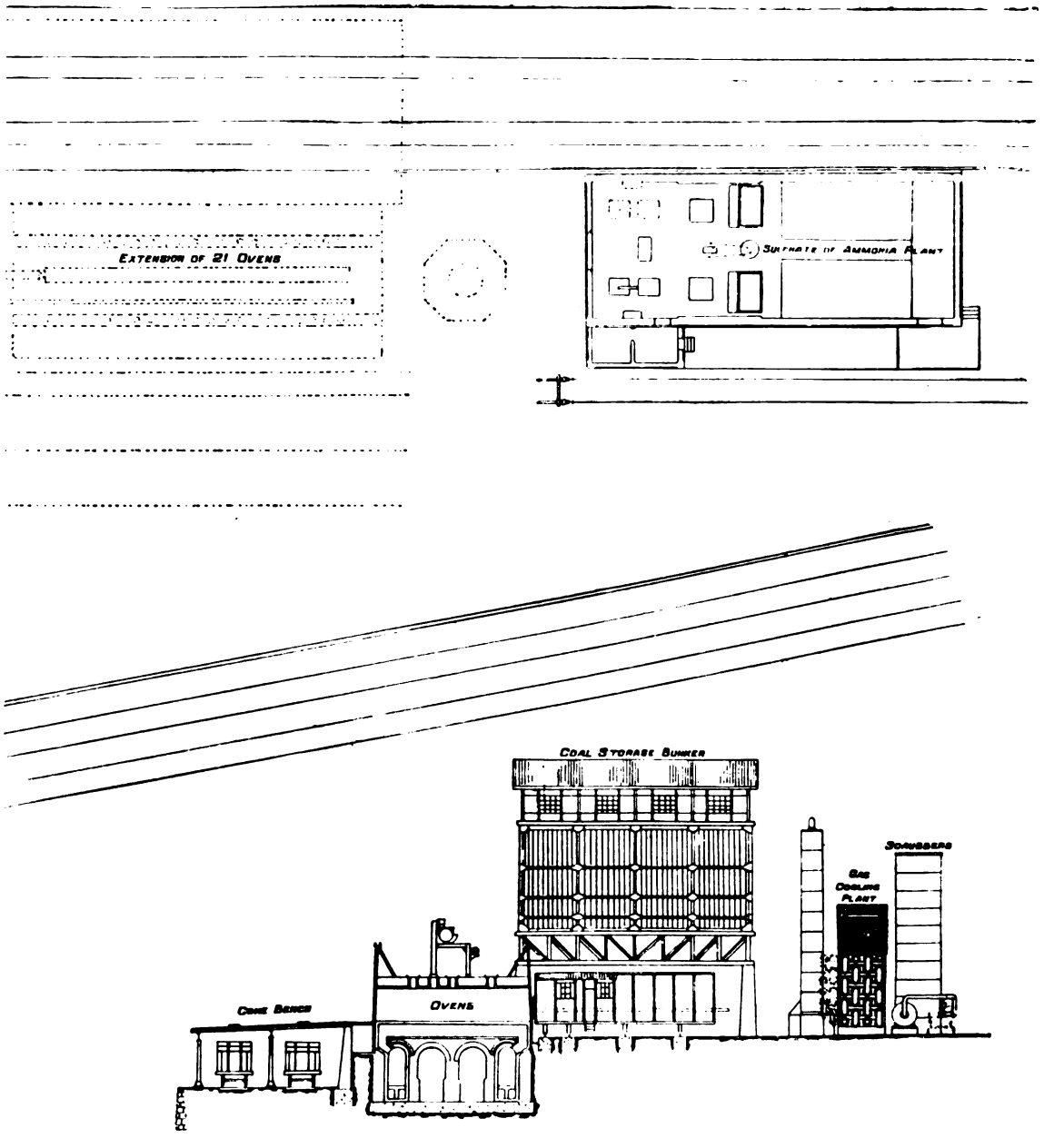
Extension of 21 Ovens
Sulphate of Ammonia Plant
Coal Storage Bunker
Scrubbers
Gas Cooling Plant
Ovens

VEN PLANT.

LIBRARY OF THE UNIVERSITY OF CALIFORNIA

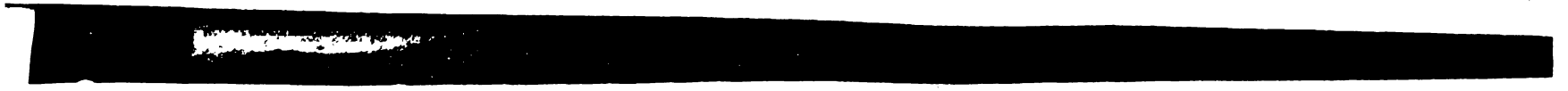

FIG. 1535.—DOUBLE COAL-COMPRESSING, COAL-CHARGING, AND COKE-DISCHARGING MACHINE.

The compressing and charging machine at the Peases West Collieries, shown in fig. 1535 is a double machine, arranged with a compressor on each side of the coke ram or "pusher." The coal is delivered into the bunkers immediately over the ram by means of the ordinary "small tub," and from these bunkers is allowed to run into the compression box. This consists of a box of the same shape as the oven, but slightly less in width, the bottom of which is movable by means of a rack on its underside. This box is filled with coal, and stamped down by the stamping gear shown on the left in fig. 1535, until a cake is formed, when the end door is opened, and the bottom, by means of the rack, is pushed into the oven, carrying the charge with it. The oven door is then lowered, and the bottom of the compression box withdrawn.

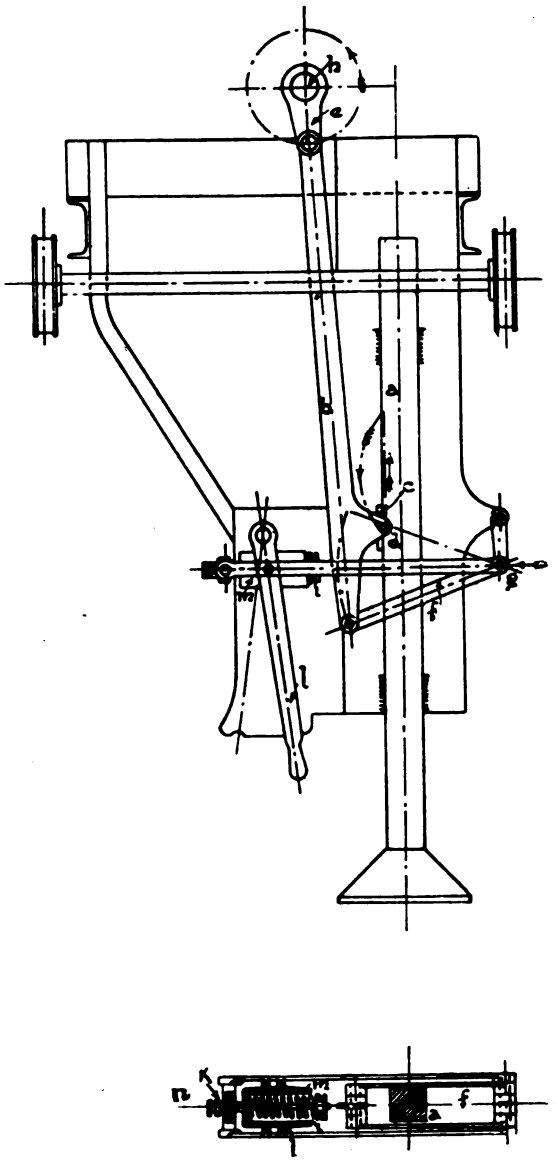

FIG. 1536.—DIAGRAM OF COAL STAMPER.

The stamper may be explained by means of the diagram in fig. 1536. On the shaft *h* is fixed a crank *e*, working a rod *b*, the other end of which is carried on a radius rod *f* pivoted to *g*; *c* is a friction plate, with side spindles *d*, which engage the projecting piece of *b*, the fulcrum of these spindles lying in the friction surface of *c*. If *b*, *e* and *f* are of suitable lengths, and if the fulcrums *h*, *d* and *g* are in the correct positions, *d* will, when the crank moves in the direction shown by the arrows, describe the curve shown in dotted line, which in its upward movement is almost straight and parallel to the direction of movement of the stamp *a*. The fulcrum *g* is not fixed, but moves in the direction shown by the arrow, pressing

together the spring *i*. If *g* were fixed *c* would, in the position determined by the set screw *k*, press too strongly against the stamper. Instead of this, however, *g* moves in the direction of the arrow, on which *k* moves from the spring bush *m*, against which it had previously rested. The plate *c* is pressed against the stamp *a* during the upward movement by means of the spring *i*, the tension of which can be regulated, independently of the set screw *k*, by the screw *n* passing *k*, *m*, and *i*. At the end of the upward movement of the pin *d*, the fulcrum *g* returns to its original position, and the plate *c* leaves the stamp, which then falls. If the hand lever *l* carrying the bush *m* is placed to the left, instead of being to the right as shown, the plate *c* during its upward movement does not come in contact with the stamp, which then remains stationary. . There are two hammers or stamps, the cranks being set at 180 degs., so that they balance each other. Each hammer can also work separately, and by means of an eccentric the hammer may be held at any desired height. The double stamper is driven by a 5-horse power electromotor, and each hammer makes 70 strokes per minute.

In the Coppée coke oven, the principal dimensions are 30 to 33 feet in length, 16 to 24 inches wide, and vary in height from 4 ft. to 6½ ft., the dimensions being made to suit the quality of coal. For instance, a dry coal low in volatile matter would be best coked in a small oven, say 30 ft. long by 4½ ft. high by 16 in. in width, the time required for coking being twenty-four hours, whereas, with a bituminous coal high in volatile matter, the larger oven would be suitable, the time for coking being forty-eight hours.

A general arrangement of a battery of these ovens without by-product plant, with a range of eight Lancashire boilers between, is shown in figs. 1537 to 1540. The coal is charged from small tubs through the holes *a* (fig. 1540) into the hot oven, and the gases pass out through twenty-six openings *b* (fig. 1539) at the top into twenty-six vertical flues *d*, which form the side walls of the oven. At the top of these openings the gas mixes with hot air admitted at the holes *c* immediately above them, and combustion takes place. After passing down the vertical flues, they are drawn into the horizontal flues *e* under every *alternate* oven, and from which part of the gas passes into the main flue I, through the openings H, and the remainder travels the length of flue *e*, round opening *f*, into the horizontal flue *g*, under the next oven, to be drawn away into main flue I, through opening H, and thence to the boilers *j* and chimney *o*. The air for combustion is first drawn into the foundation arches L by the openings K, which may be regulated by means of dampers. From these arches it rises at opposite ends to the openings K into vertical flues, which lead to the two horizontal flues M, placed the length of the ovens, in which it is finally heated

PLATE CXXXI.—(*To face page* 726).

LIBRARY
OF THE
UNIVERSITY
OF

FIG. 1539.

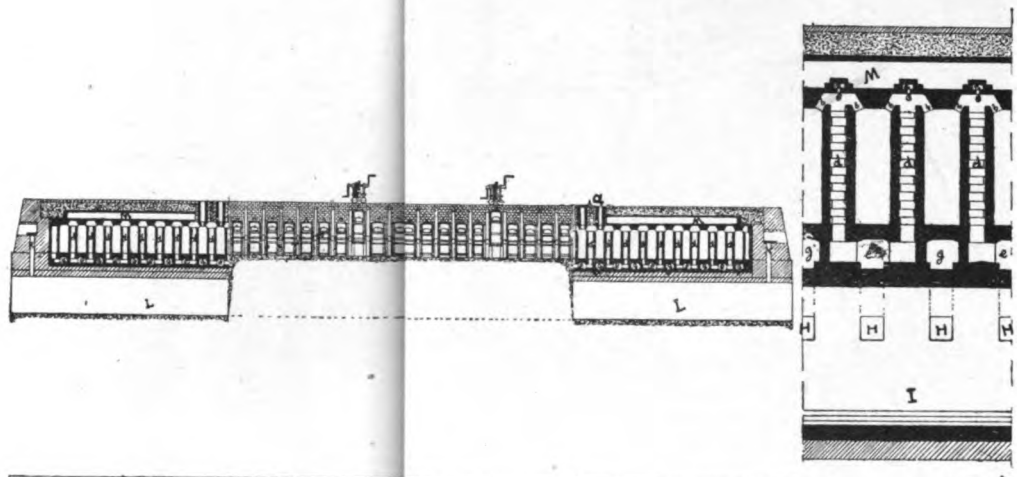

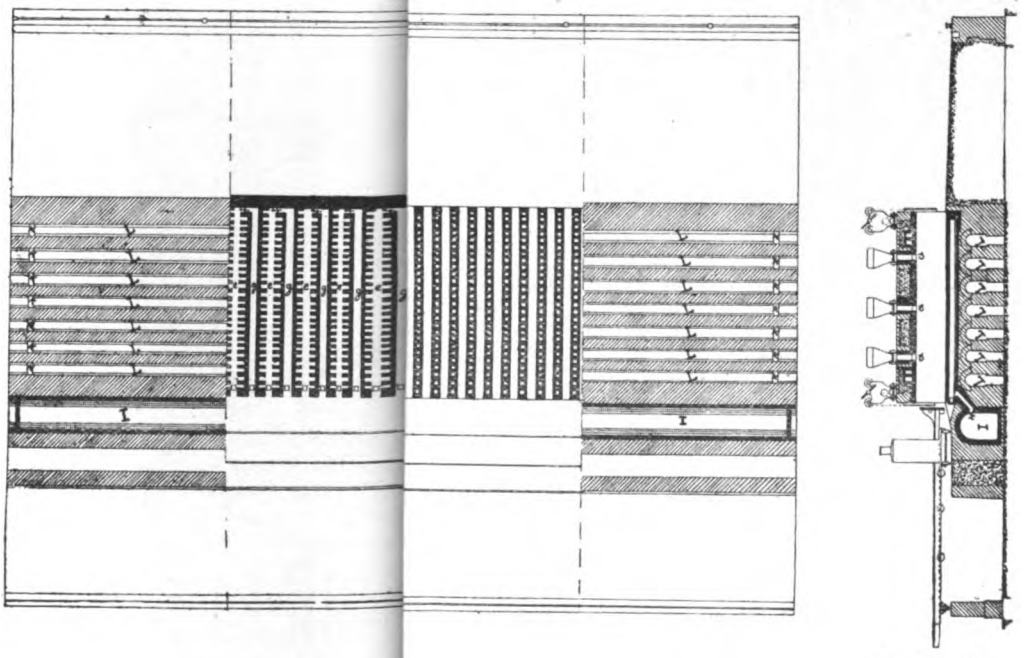

FIG. 1540.

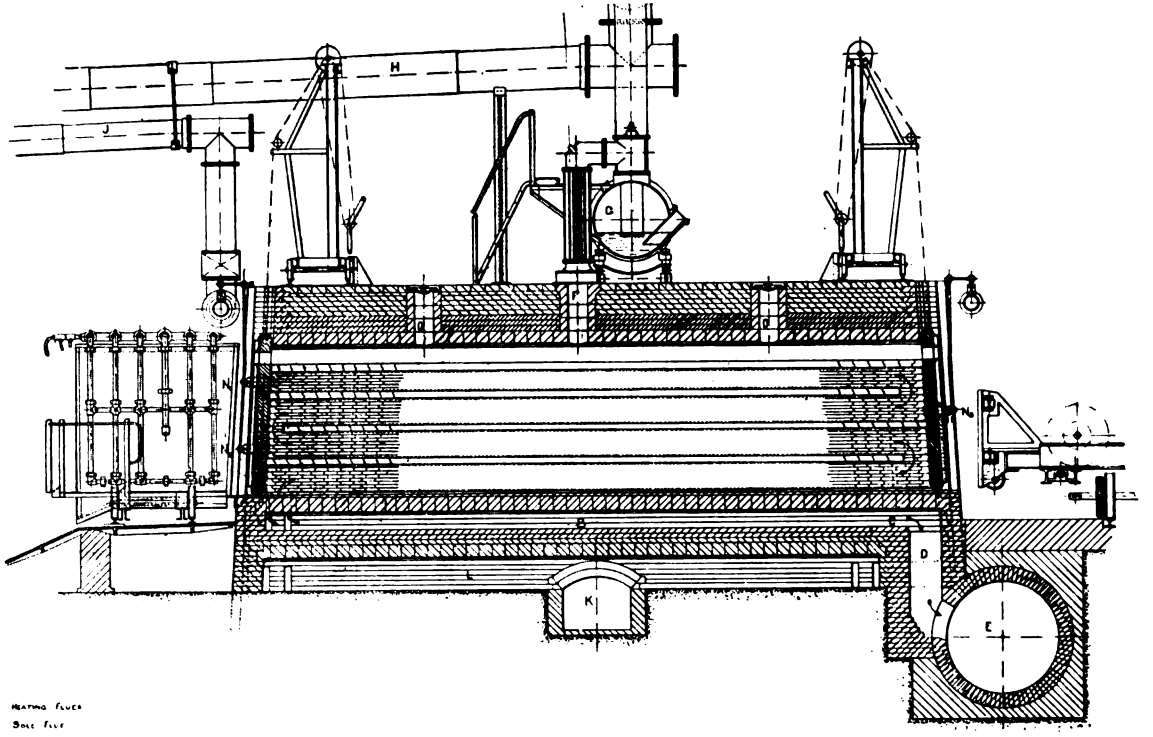

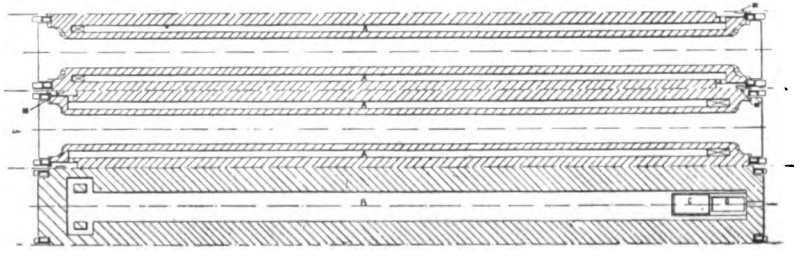

Fig. 1545.

Fig. 1544.

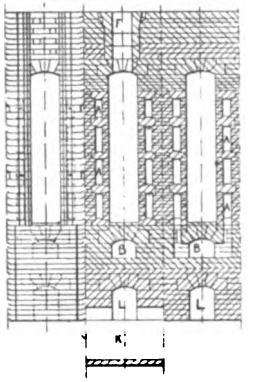

Figs. 1543 to 1545.—Semet-Solvay Coke Ovens.

Fig. 1546.

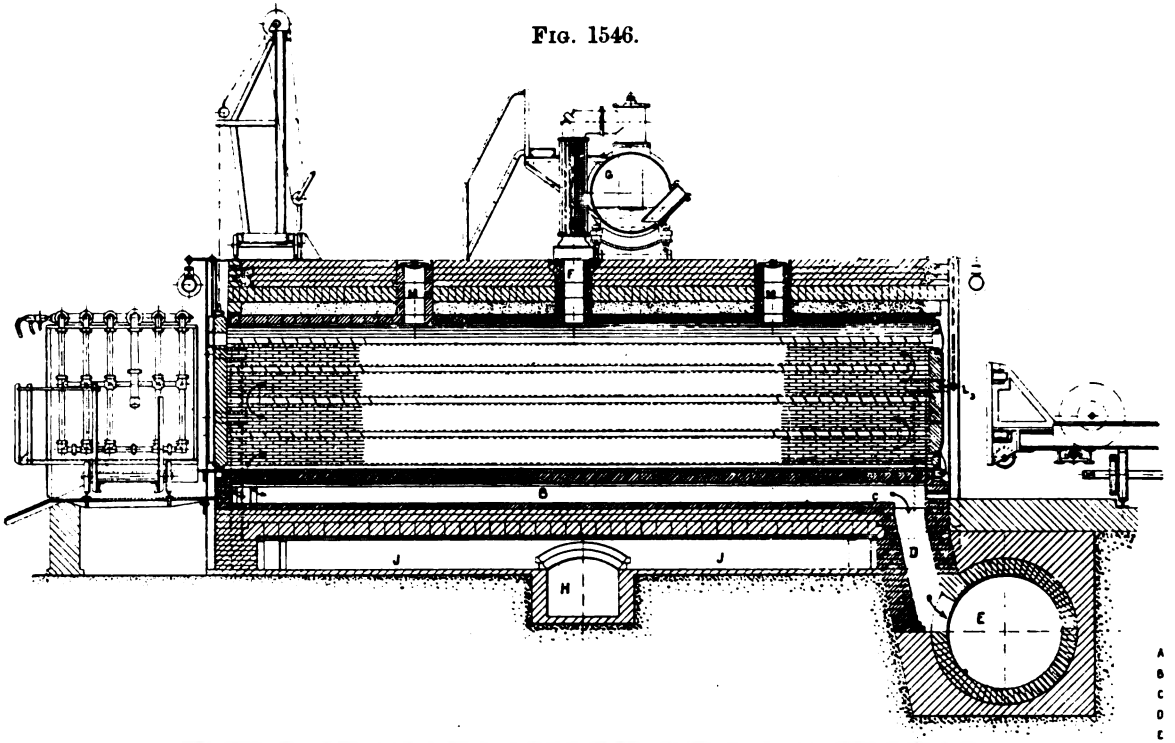

Fig. 1547.

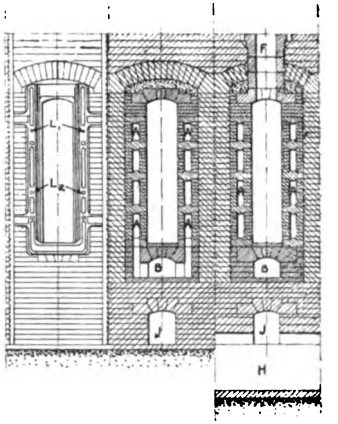

A Heating Flues
B Sole Flue
C Regulating Damper
D Waste Gas Flue
E Main Waste Gas Flue
F Gas Outlet Hole
G Hydraulic Main
H Main Air Flue
J Air Flues
K Hot Air Flues
L, L1, L2 Gas Burners
M Outlet Holes in Roof

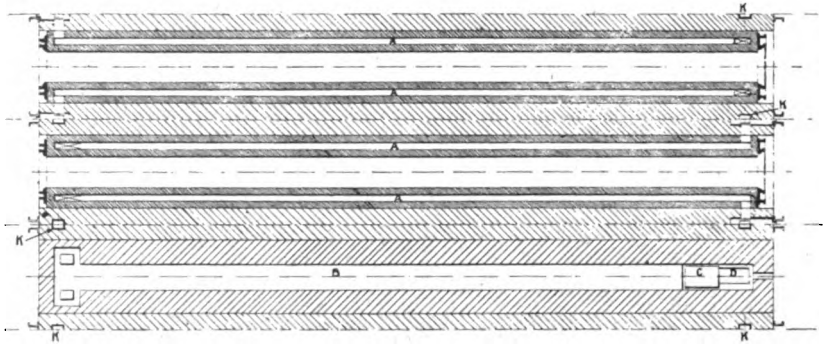

Fig. 1548.

Figs. 1546 to 1548.—Semet-Solvay Coke Ovens.

before being distributed to the smaller flues over each side wall, whence it is drawn through the holes *c* previously mentioned.

In the by-product coke oven shown in figs. 1541, 1542 and 1542A the flues are built in the same way as the ordinary oven. When working as by-product ovens the gas is introduced at the bottom part of the oven, in order not to overheat the top part, where the gas is drawn off for the by-products, consequently the temperature at the top is not high enough to decompose the light oils contained in the gas escaping from the oven.

As will be seen in fig. 1541, the gases from the coal are taken from the vertical opening *h*, which leads them by means of cast iron pipes to the by-product plant, after which they return by the two pressure pipes *a* placed each in an outside archway at each end of the ovens. From this pressure pipe the gases are introduced into the side wall of the oven—which is divided into two equal parts by the separation *b*—in the following manner:—From the pipe *a* the gases pass into the mixing tube *u* on each side of the oven by means of the burner *c*—similar in construction to a Bunsen burner—where a part of the air necessary for the combustion is mixed with it. The mixture of gas and air is blown into the distributing flue *d*, placed under the side wall of the oven, and from here it is driven through a certain number of slits *e* into the combustion chamber *f*, where it receives the other part of the air necessary for complete combustion. This secondary air heated by the foundations of the ovens is carried through the opening *g* into the air chamber *m*, from where it passes to the slits *n* (one for each gas slit *e*) into the combustion chamber *f*.

From the combustion chamber *f*, the flames ascend uniformly the whole length of the side wall through the flues J, meeting in the horizontal flue *z*, placed on top of the side wall. From here they descend by the flues *j*, which lead into the flue *o*, (fig. 1541) under the floor of the oven, which is thus heated on both sides for its entire length before the heat leaves the oven by the openings *q*, from where it passes into the main flue *x* leading to the boilers and chimney.

When this oven is not to be used as a by-product oven, the vertical damper *y* (fig. 1542) is let down into the horizontal flue *z* as shown by the dotted lines, and the dampers *p* are opened. The gases then escape by the openings *v*, and pass through *p* into flue *p''* placed on top of the side wall. The dampers *w* being also opened, the gases descend into the front part of the horizontal flue *z*, where air is admitted by the openings in the end walls as shown in figs. 1542, and then descend by the vertical flues J into the chamber *f* (fig. 1543). From here the flames ascend by the vertical flues J into the middle part of the flue *z*, and the heat then follows the same course as described above.

The Otto-Hilgenstock oven is another vertical-flued oven. In this oven

the coal is charged in the usual way, but the main feature is the system of heating the side flues by Bunsen burners. The gas from the coal in the oven chamber passes through an opening into the gas main on top of the ovens, whence they are drawn to the by-product plant by exhausters. After the by-products have been recovered, the gas returns through a main pipe, which feeds the whole of the ovens in a battery. From this main, small transverse branches lead into the arches under the ovens, and from these are taken—by means of T pieces—branches rising to nozzles in the heating flues of the chambers which convey the necessary gas to each wall. The Bunsen burners draw in sufficient air for combustion, and owing to this action the air is heated on its way from the arches supporting the ovens into the heating flues.

The flame ignites at the level of the coking chamber, and rises vertically to a horizontal top flue through the heating flues. From this horizontal top flue, divided into two halves, the gases are led off through vertical flues under the bottom of the oven, generally known as the "sole flue." The burnt or waste gases pass through this flue, pre-heating the air and gas on the way to the combustion channel as described above, and finally are drawn through the opening, which can be regulated by a damper plate to the main waste gas collector. The waste gases may pass into a boiler plant, where the heat still contained in them would be used for steam-raising before being passed to the chimney stack.

Both in this oven and the Coppée the regulation of the gas and air for heating the flues, takes place in galleries below the surface, and in the case of the Otto-Hilgenstock below the oven itself. This arrangement is very unsatisfactory for efficient supervision, but it is difficult to see how any other arrangement is possible.

The Semet-Solvay oven, which is shown in figs. 1543 to 1548 from drawings kindly supplied by Mr. J. H. Darby, is of the horizontal-flued class, the chief feature being the construction of the flues, which gives a sound, solid and substantial structure. This oven is made in three different types—(A) one in which the heating flues are built into the solid supporting walls (figs. 1543 to 1545); (B) in which the flues are independent of the supporting walls (figs. 1546 to 1548); and (C) in which provision is made for pre-heating the air to a greater degree than in either (A) or (B), though otherwise similar in construction. The air is passed through a continuous regenerator, which increases the yield of gas up to 50 per cent.

The oven chamber is about 7 ft. high by 33 ft. to 36 ft. in length by 16 in. to 20 in. wide, according to the quality of coal to be coked. On each side of the chamber, and separated from it by walls 4 in. thick, are longitudinal heating flues A. Underneath the chamber is the sole flue B, in which the gases burnt from the flues from either side are united to travel under the bottom of the oven, past the

regulating damper C and port D into the waste gas flue E, in which they are carried to the boilers and chimney (fig. 1543).

The gases given off by the coal in the process of coking escape by the opening F into the hydraulic main G, where, under the influence of an exhauster, they bubble through weak tar and ammoniacal liquor, and are drawn through the green gas main H to be condensed and washed in suitable apparatus. The gas having been thus deprived of the ammonia, tar and light oils, are returned through the pressure side of the exhauster through the scrubbed gas mains J, to supply the heat required for the oven walls. Only a portion of the gas so returned, however, is required for this, the remainder being available for other purposes.

The air required to burn the gas in the flues is pre-heated, being drawn by the chimney draught under the whole length of the battery of the ovens in the flue K, and under each oven in the flues L, and delivered at a temperature of about 300 degs. Cent. through the upcast ports M into the heating flues A. Gas is admitted into the heating flues, together with a regulated volume of pre-heated air, first at the point N_1, and successive reinforcements of gas and hot air are admitted at N_2 and N_3.

This oven is designed for compressed charges of coal, served through the oven door, and the holes O and M in the crown of the oven are not charging holes, but are intended to let off the large volume of gas emitted by the coal in the first few minutes of charging. This raises the question as to whether a better system of charging, other than by opening the oven door, and ramming a charge into a hot oven, with the consequent waste of dense volumes of gas, could not be introduced.

Each oven has its own heating flues, divided from those of its neighbour by solid thick walls. The construction shown in figs. 1546, 1547 and 1548 is undoubtedly the best, though more expensive, as the heating flues and roof form a lining to the permanent oven structure, and this lining may be entirely removed and renewed without affecting the main structure. The structural value of these solid dividing walls is not the only one, as they form a heat store, which is not directly affected in temperature when a fresh charge of coal is introduced, and thus play an important part in the coking process. Although undoubtedly these walls get very hot, it must not be supposed that a greater quantity of gas is required for heating this oven, than for one without the dividing wall. It will, of course, be a little longer in heating up at first, but once the temperature is raised to that of the combustion of the gas, no further heat can be absorbed by the wall, consequently it is absurd to raise as an objection to this dividing wall that it will consume more gas. The only possible objection that can be against it is one of initial cost, and the lengthening of the battery. Another important point in the construction of any coke oven is the " gas-tightness " of the walls dividing the coking chamber from the flues.

Owing to the change of temperature resulting from the introduction of every fresh charge the demand upon the inner linings is very severe. If the bricks used in the linings are too large, the movement of expansion and contraction to which they are subject brings about fractures and open joints; if sufficiently small, that movement is harmless in the individual brick. The heating flues of the Semet-Solvay oven are built up of pieces measuring only 8 in. by 4 in. by 2 in., which is less than the ordinary brick, and are made with true plane surfaces. These bricks are laid with joints about $\frac{1}{8}$ in. in thickness, and if not true enough for such exact laying are discarded. Sight holes are provided at the ends of the flues through which the gas flame, degree of heat, and condition of the walls are under continual observation.

Figs. 1551A, B, C, and D show the Semet-Solvay recuperative coke oven, in which the air for combustion in the flues is raised to a very high temperature before being admitted. Ordinarily, this is obtained by passing the air on its way to the flues through "regenerators" which consist of a mass of "chequer" brickwork, and which are alternately heated by means of the waste gases, and then cooled by passing through the cold air, which of course absorbs the heat. These regenerators then work in pairs, one being heated with the waste gas whilst the other is giving up its heat to the air, after which the operation is reversed by means of suitable dampers or valves. One pair of regenerators will thus serve a number of ovens.

In the recuperative oven, however, each oven is provided with its own recuperator, which is constantly in operation. As will be seen on reference to fig. 1551B, the recuperator is placed directly underneath the oven and consists of eight narrow horizontal flues, with small vertical holes on each side through which the air passes, as shown in the section, fig. 1551D. The cold air enters at H, and passes through the recuperator into the hot air flue J, and through the small openings K into the vertical duct leading to the flues. Gas is admitted to the flues through the vertical pipe at L for the top flue, L_2 for the middle flue on the opposite side, and at L_3 for the third flue, but there is no admission of either gas or air to the bottom flue. The products of combustion travel along the flues in a zig-zag direction as shown by the arrows, and passing through the small openings unite in the sole flue B with the burnt gases from the flues on the opposite wall of the oven, travel along to C, and down to D, where they pass through the recuperator to the chimney flue E. The gases entering the main flue have a temperature of 300 degs. Cent., while the air delivered to the flues for combustion is heated to 550 degs. Cent. As shown in fig. 1551C, dampers are provided for disconnecting the recuperator entirely.

The coke made in beehive ovens has a bright silvery appearance, which, however, is not due to the fact that it is coked in the beehive oven, but that it is

cooled inside the oven, while excluded from the outer air. If the coke made in retort ovens could also be cooled in the same manner, its usual black appearance would disappear. In connection with the Semet-Solvay ovens, an improved quencher is used, as shown in fig. 1549. This consists of a frame suspended by means of a small crane on top of the ovens, which supports a number of pipes, with small holes to give a large number of water jets. These pipes embrace the bank of coke as it issues from the oven, and quench it before oxidation by contact with the outer air can take place, and hence the coke cooled in this manner has the same bright and silvery appearance as beehive coke and contains less than 1 per cent. of water. This quencher may also be mounted upon a car running on a track along the discharge hearth, as shown in figs. 1543 and 1546.

Emerging from the quencher the coke is received upon an inclined hearth, which should be plated, down which it slides to either a conveyor, as shown in fig. 1550, or to a patent coke car, as shown in fig. 1551, which clearly illustrate each system respectively. Where it is placed in the car, the latter is hauled up an incline to a loading station and filled into trucks.

The coke is discharged from the ovens by means of a ram, which may be driven by either steam or electricity. Figs. 1552, 1553 and 1554 show an electric-driven ram.

A plan of the usual Semet-Solvay by-product plant is shown in fig. 1555. There are two batteries of coke ovens, with a compressing plant in the centre, supplied with coal from a conveyor, while the coke is dealt with by a coke car. The gases leaving the oven are conducted through an off-take pipe, making the connection to the hydraulic main as short as possible, where they bubble through weak ammonia liquor. The object is to reduce the deposition of tar and carbonaceous matter in "dry" pipes to a minimum, and a large circulation of liquor and soft tar is the solvent which keeps the hydraulic main clean. The gases given off in coking are collected in this "main," and led successively through two types of condensers to a rotary exhauster, and thence to a tar extractor, and ammonia and benzol scrubbers of the rotary type, after which they are available, part for use in heating the oven flues and the surplus for other purposes. As shown, the waste heat is conducted in a main flue from the heating flues to Lancashire boilers and thence to the chimney stack.

Another general arrangement of Semet-Solvay ovens is that at Drumbreck, shown in fig. 1550 and fig. 1556, Plate CXXXIII., the latter being taken from Mr. Forgie's evidence before the Royal Commission on Coal Supplies; while figs. 1557 to 1560, Plate CXXXIV., show the elevation of the coke ovens, coke conveyor, coke screening plant and loading arrangement, the latter being fitted with a jib end. The coke conveyor is specially constructed in regard to the lubricating arrangements

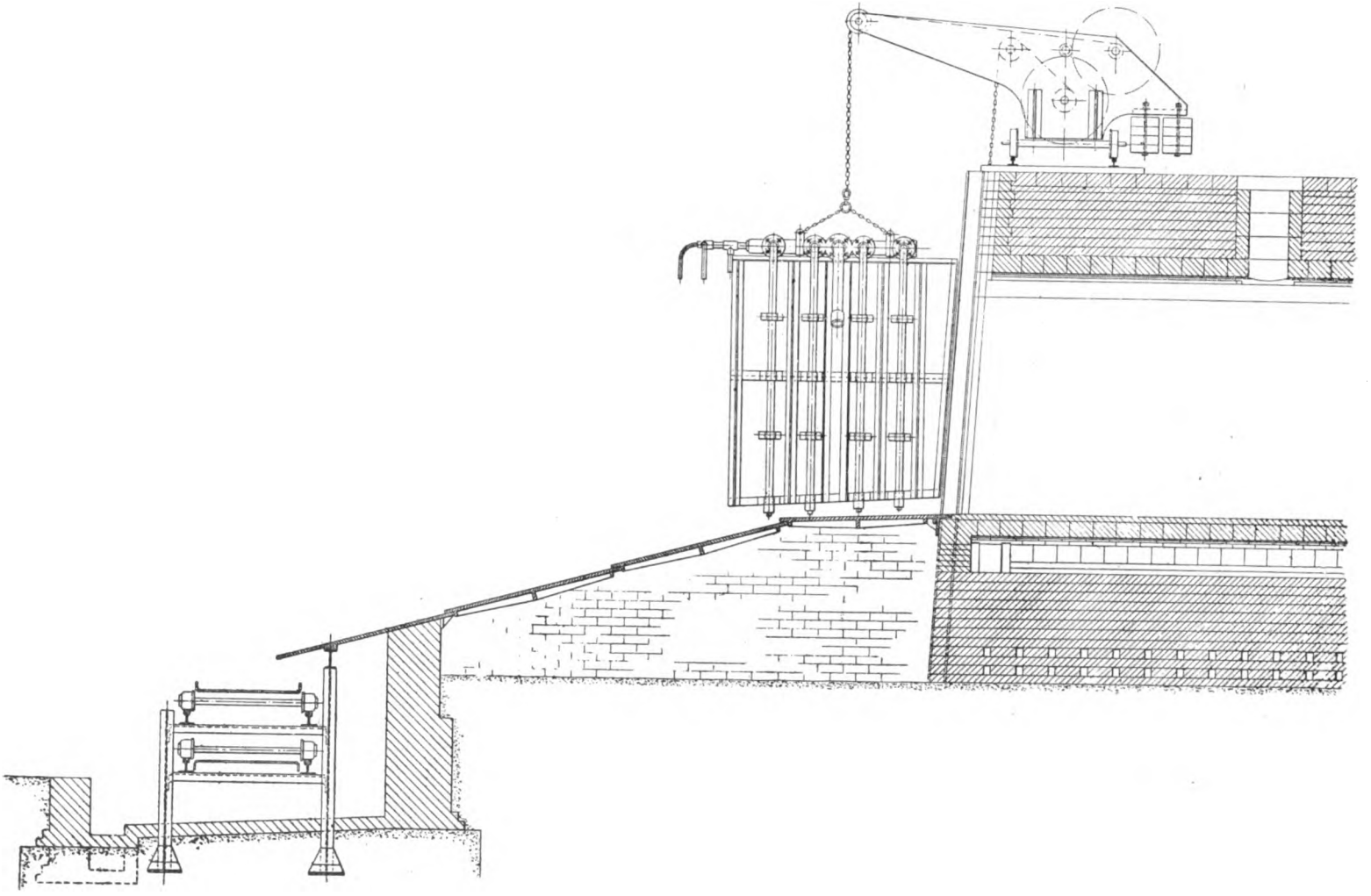

FIG. 1549.—COKE QUENCHER.

FIG. 1550.—COKE CONVEYOR.

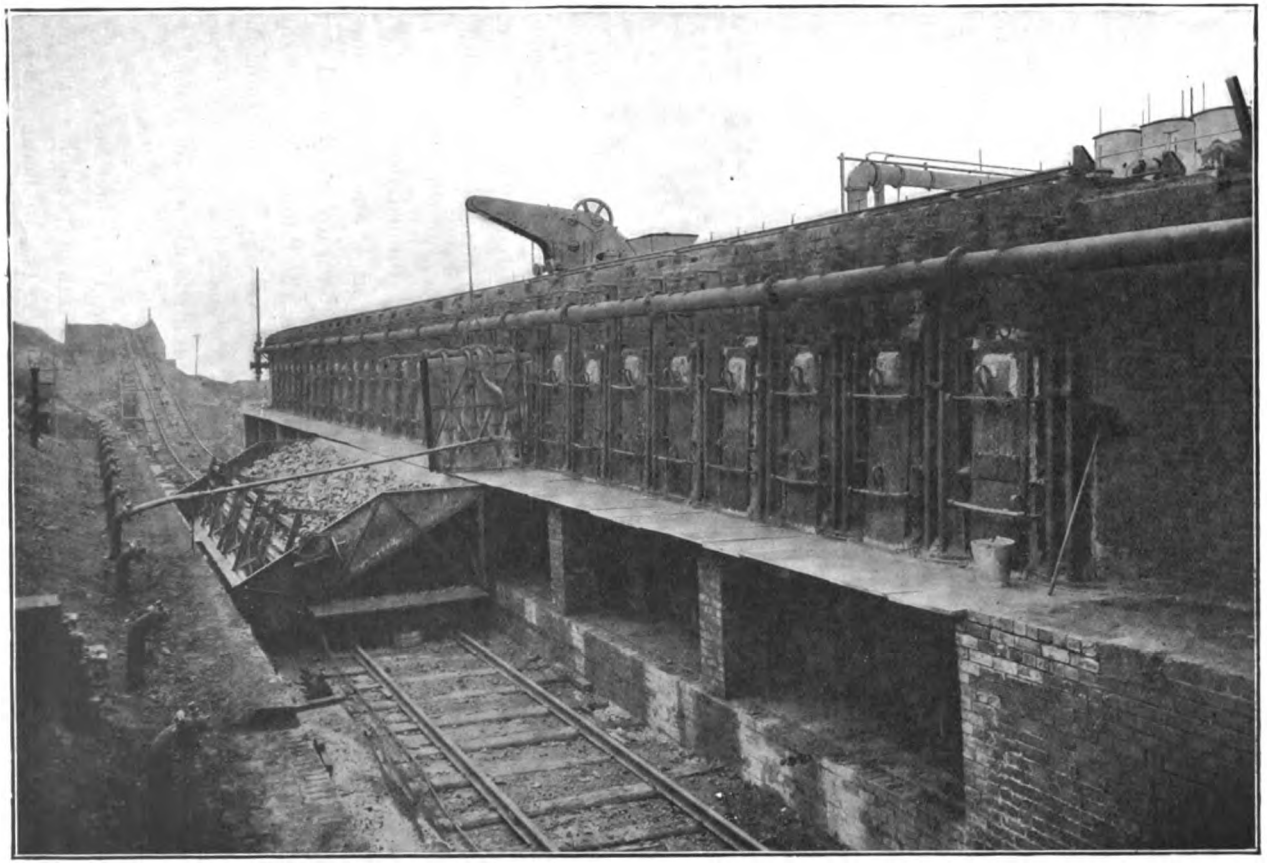

FIG. 1551.—DARBY PATENT COKE TRUCK.

of the rollers and special form of links, from the designs of Messrs. Campbell, Binnie and Co., of Burnbank, Glasgow, who also carried out the work in connection with the screening plant. Such an arrangement as this is undoubtedly the best for loading the coke, but the objection has been mainly due to the great difficulty in maintaining the conveyor owing to the severe abrasive action of coke dust on the rollers and spindles, which has been entirely removed in the design by the above-mentioned firm.

To prevent, however, the coke from the ovens forming in a heap on the conveyor when this is standing due to want of wagons or other cause, the bottom of the bench should be fitted with vertical swinging gates, which are fixed by a pin in the bench plate and against which the coke rests. On withdrawing the pin and releasing the gate the coke gently slides on to the conveyor.

The products of such a plant, supposing the coal to contain 2 to 3 per cent. of chemically combined water, and 30 per cent. of volatile matter, with a yield of 11,000 cubic feet of gas per ton of coal, would be :—

Coke	13·6 cwt.	per ton of	coal charged
Tar	112 lb.	,,	,,
Ammonium sulphate	28 lb.	,,	,,
Light oil, 65 per cent. naphtha....	3 gallons	,,	,,
Water, evaporated into steam	1,960 lb.	,,	,,
Surplus gas	3,500 cubic feet		,,

Another horizontal-flued oven is the "Huessener" shown in figs. 1561 to 1563, in which A is the coking chamber, with a strong division wall B between, and *a*, *b* and *c* the loading holes, when the coal is not compressed, while *d* is the ascension pipe leading to the hydraulic main. D and C are the return gas mains with down branches *l*, fitted with regulating cocks *m*, *n*, *o*, *k*, for heating the gas flues *f*, *g*, *h*, and *i*. The heating gas first enters the two sole flues *e*, immediately under the floor of the oven, along with the necessary quantity of air, at J, and travels the whole length of the oven, through the small opening *e* (fig. 1562) up the vertical end flue, receiving more gas on its upward course, and so on to the flue *f*. New gas and air is admitted to the horizontal flues as required, and leaves by the down flue into the common chimney flue E. The air necessary for combustion is admitted at each gas inlet, and the means for regulation of both gas and air is all above ground level—thus facilitating control and observation of the condition of the flues.

The bricks of which the oven is built are—unlike the Semet-Solvay—tongued, grooved and dovetailed so as to make the flues as gas-tight as possible. The question as to whether tongued or plain bricks are the best is a difficult one to decide. Probably the greater number of ovens are built of the former type, but in both cases they must be absolutely true to shape, and it will be much easier to get true bricks which are plain, than those which are tongued and grooved.

FIG. 1551A.

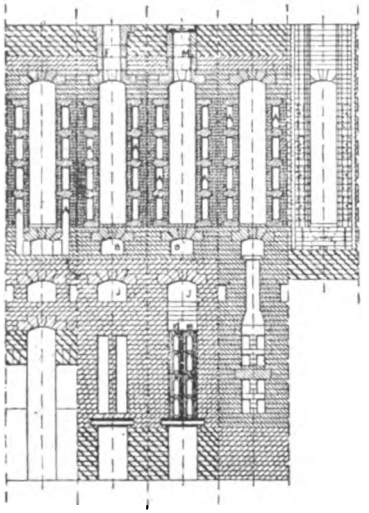

FIG. 1551B.

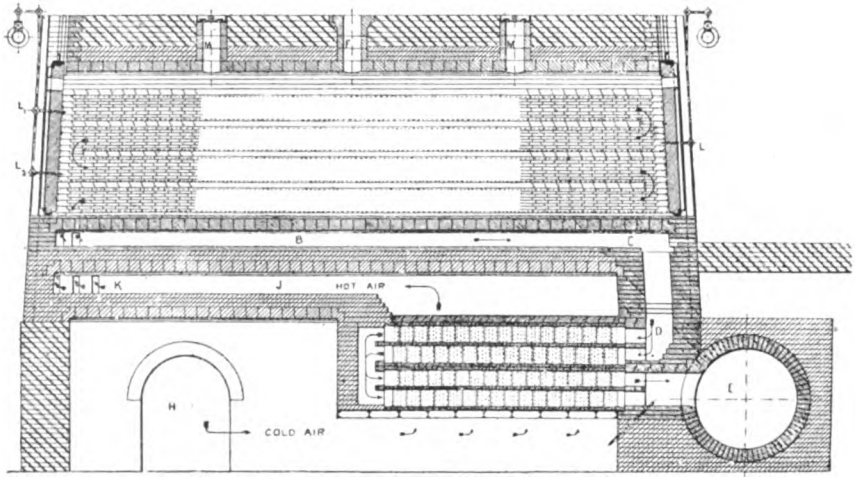

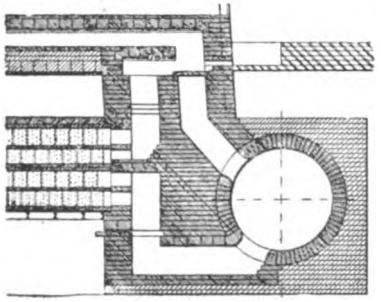

FIG. 1551C.

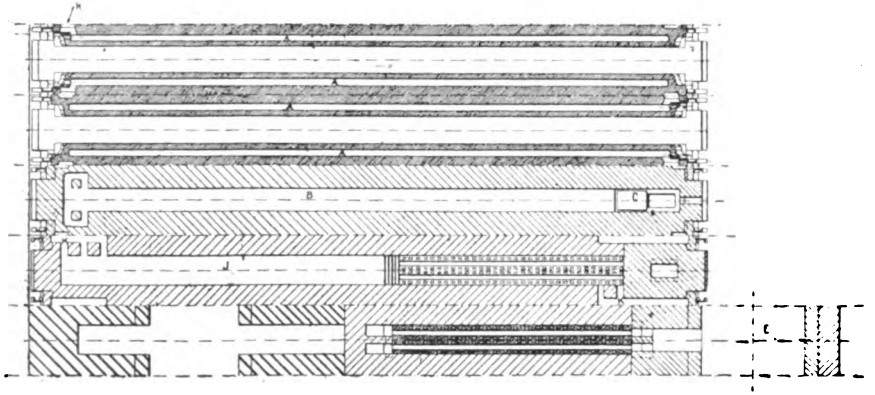

FIG. 1551D.

FIGS. 1551A, B, C, AND D.—SEMET-SOLVAY RECUPERATIVE COKE OVEN.

Fig. 1552.

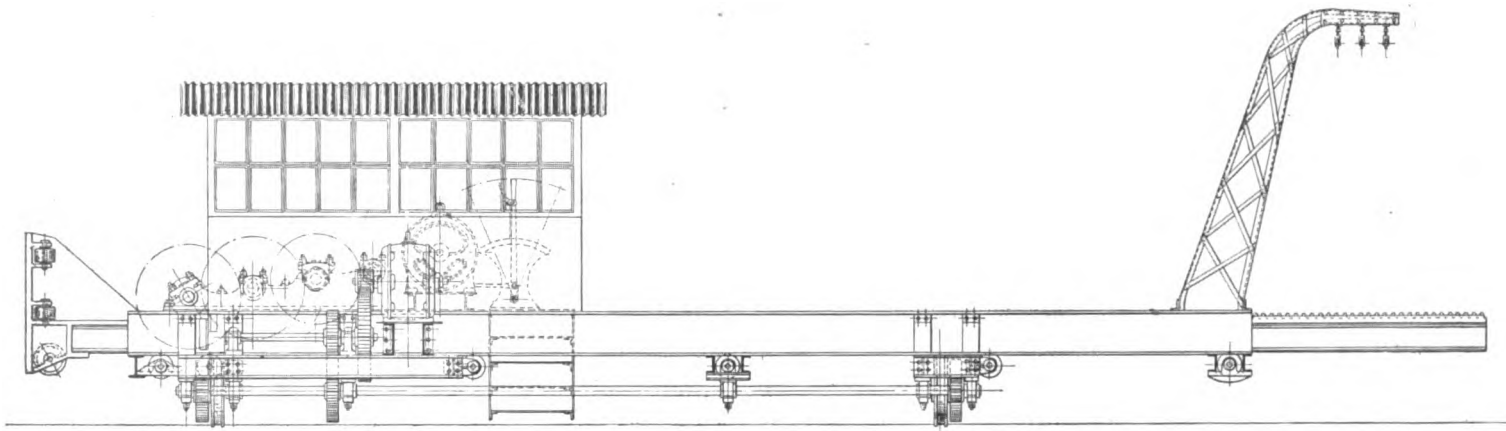

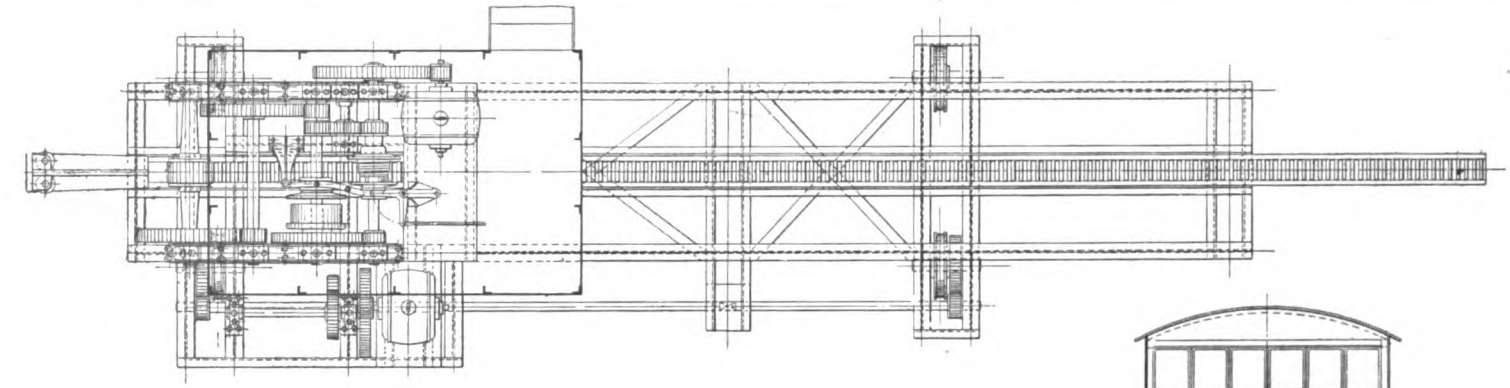

Fig. 1553.

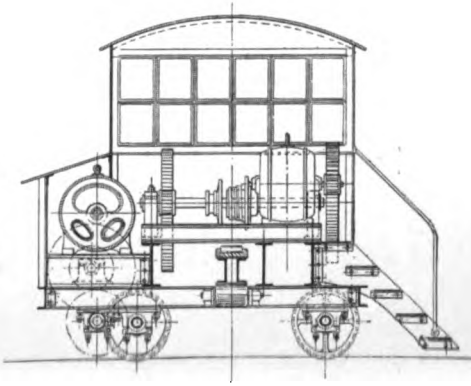

Fig. 1554.

Figs. 1552 to 1554.—Coke-Discharging Ram.

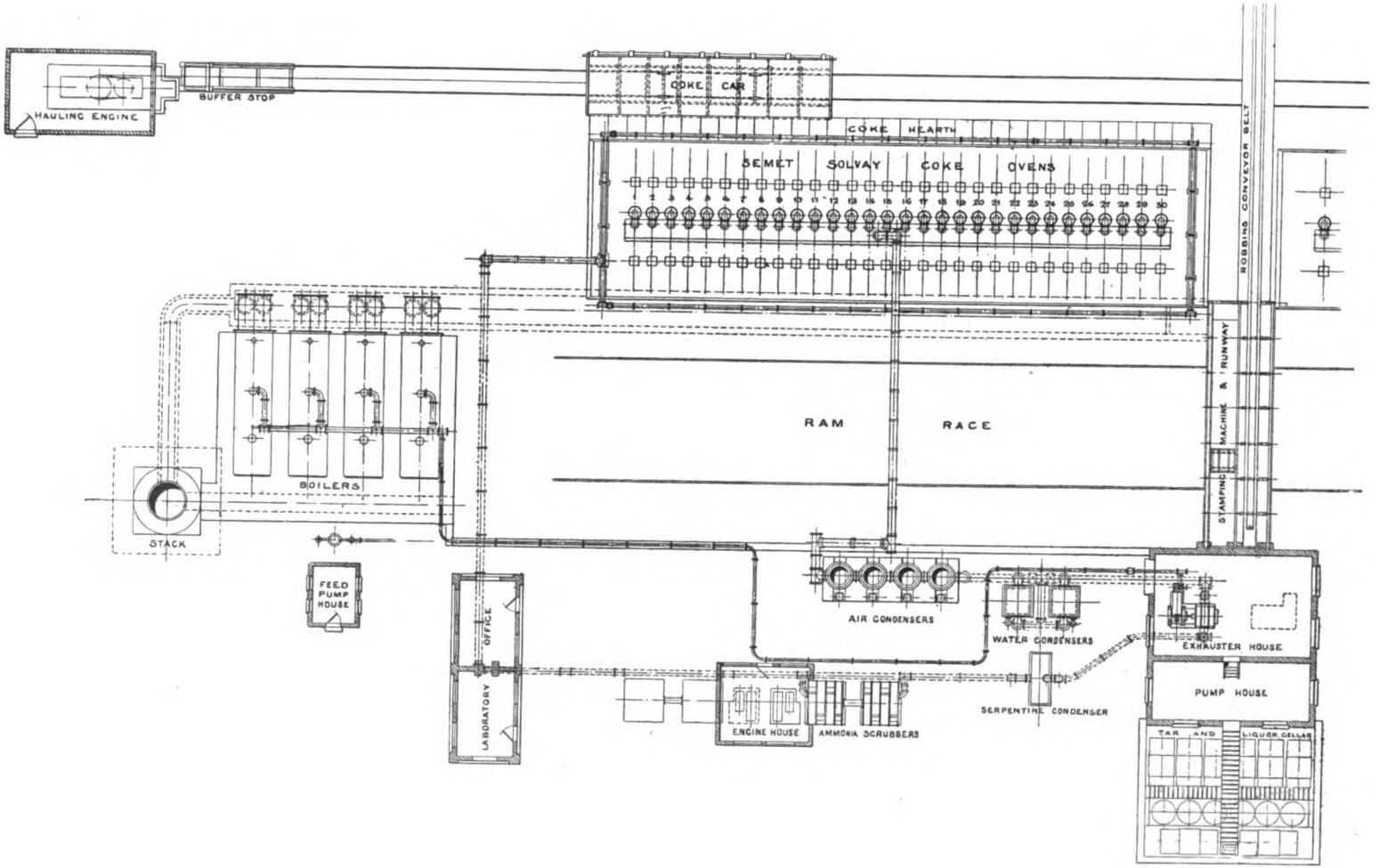

FIG. 1555.—PLAN OF SEMET-SOLVAY PLANT.

Fig. 1564 shows a temperature curve taken by a recording Le Chatelier pyrometer giving the rise in temperature during the period of coking, and it is remarkable to notice that it takes nearly ten hours to drive off the moisture in the coal before coking commences. From this point the curve steadily rises from 250 degs. Fahr. to 1950 degs. Fahr. in eleven hours, and slowly up to 2,150 degs. Fahr., the final temperature for another eleven hours. The total period is therefore 32 hours, which would be reduced to 24 or 26 hours had the coal been dry.

With this oven it is claimed that with coals containing about 30 per cent. of volatile matter the yields of coke and by-products are, per ton of *dry* coal :—

Blastfurnace coke	72 per cent.
Breeze	2½ ,,
Tar ..... 100 lb.	4½ ,,
Sulphate of ammonia 28 lb.	1¼ ,,
Benzole (90 per cent.) 2¼ gallons	0·9 ,,

and the following table gives the products obtained from 100 tons of dry coal :—

100 *tons of Coal.*

Analysis—	Per cent.
Ash	6·42
Sulphur	1·30
Volatile matter	29·47
Fixed carbon	62·81

- 70 tons blastfurnace coke.
- 2½ tons breeze.
- 721 gallons tar
  - 6·48 gallons naphtha.
  - 111·75 gallons creosote oil.
  - 4 cwt. 0 qr. 27 lb. naphthalene.
  - 129·78 gals. anthracene oil.
  - 1 cwt. 2 qr. 5 lb. anthracene.
  - 2 tons 4 cwt. 3 qr. 15 lb. pitch.
- 1 ton 2 cwt. 1 qr. sulphate of ammonia.
- 152 gallons 90 per cent. benzole.
- 240,000 cubic feet surplus gas—in gas engines to 9,600 horse-power hours.
- 90 tons steam, of which 60 tons is surplus.

Fig. 1565 shows the general arrangement of an installation of 120 ovens at Port Clarence, Middlesbrough, from which it will be seen the gases go from the ovens to twelve vertical water tube coolers, in which the water runs in the opposite direction to the gas, and is heated to 150 degs. Fahr. and afterwards used for boiler feed water. The gas is cooled to 60 degs. Fahr., and the tar extracted and run into storage tanks. The gas is next passed through the exhausters and forced through the Pélouze Audouin—which extracts the last traces of tar fog—into six ammonia scrubbers each 13 ft. diameter by 53 ft. in height, and after scrubbing with water and weak ammonia liquor is deposited into storage tanks, and from thence pumped into the stills in the sulphate of ammonia house. The ammonia gas from the stills

PLATE CXXXIV.

FIG. 1557

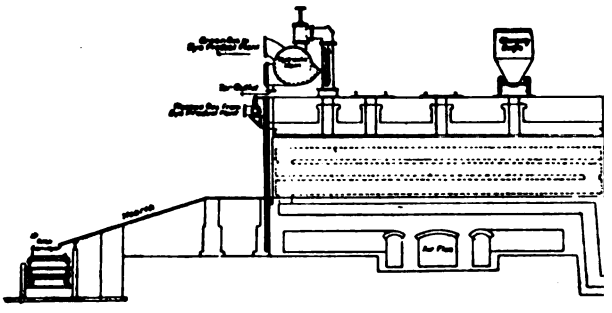

Section through Ovens and Conveyor

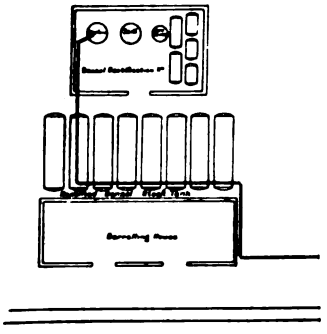

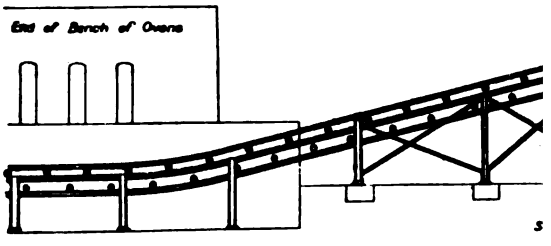

FIGS. 1557 TO 1560.—BY-PRODUCT

LIBRARY OF THE UNIVERSITY OF CALIFORNIA

FIG. 1558.

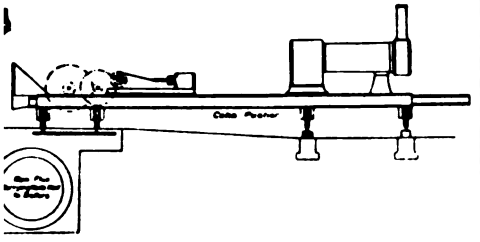

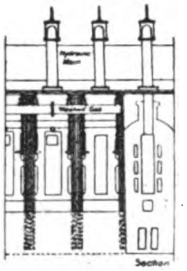

Elevation of Ovens

FIG. 1559.

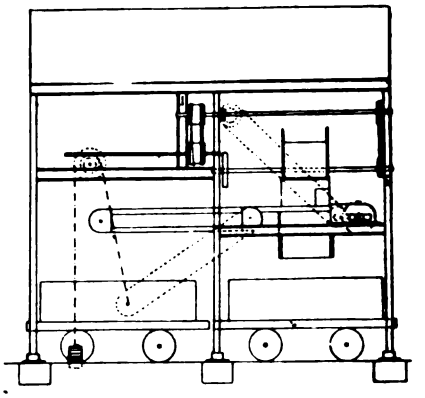

End Elevation of Wagon Loading Arrangement

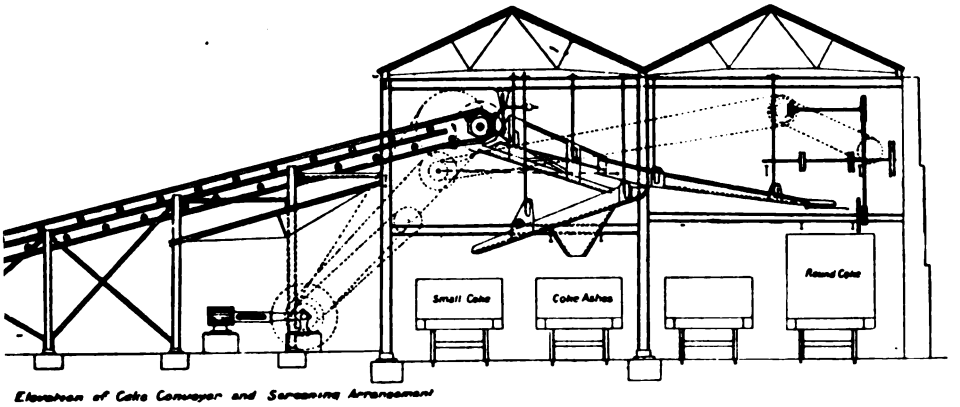

Elevation of Coke Conveyor and Screening Arrangement

FIG. 1560.

COKE OVENS AT MESSRS. WILLIAM BAIRD AND CO.'S COLLIERIES, DRUMBRECK.

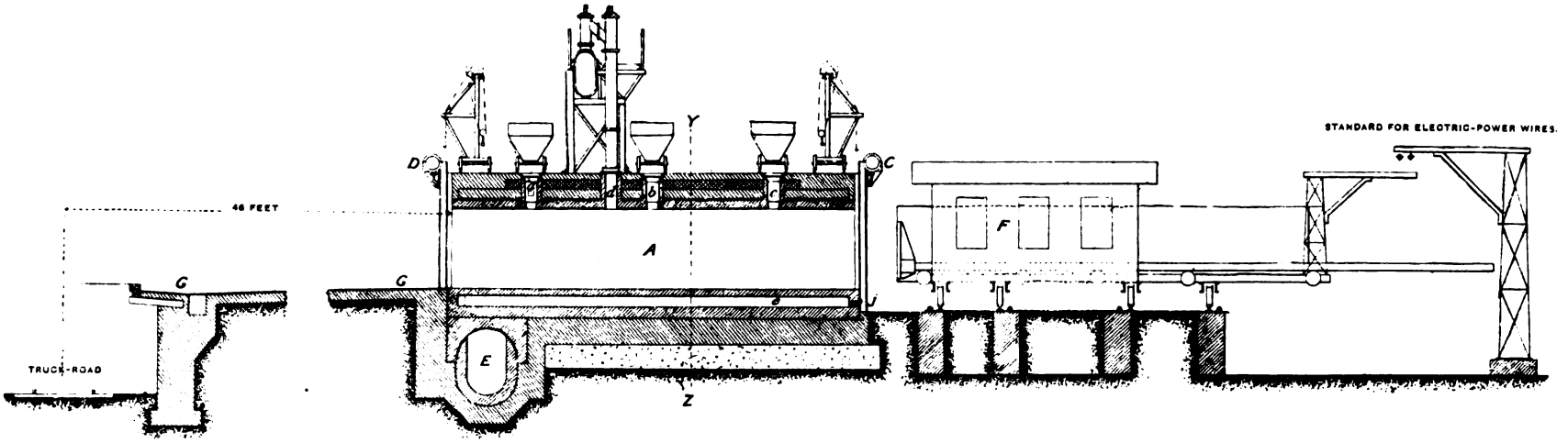

LONGITUDINAL-SECTION THROUGH THE OVEN-WALL

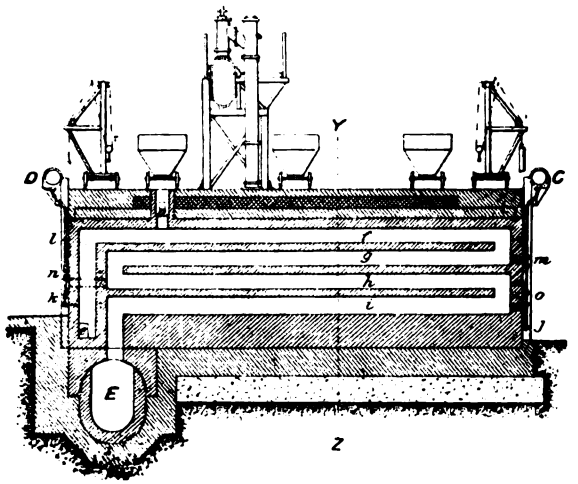

FIG. 1562.

CROSS-SECTION OF OVEN ON LINE YZ.

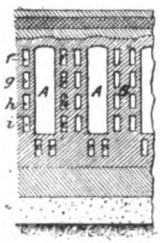

FIG. 1563.

TEMPERATURE-CURVE OF NO. 31 HUESSENER COKE-OVEN DURING A COMPLETE COKING-PERIOD.

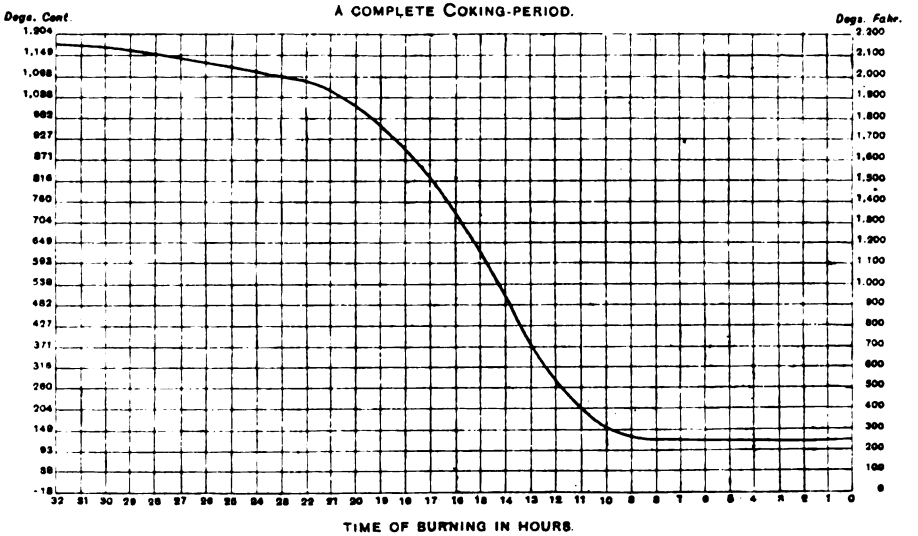

FIG. 1564.

FIGS. 1561 TO 1564.—HUESSENER COKE OVEN.

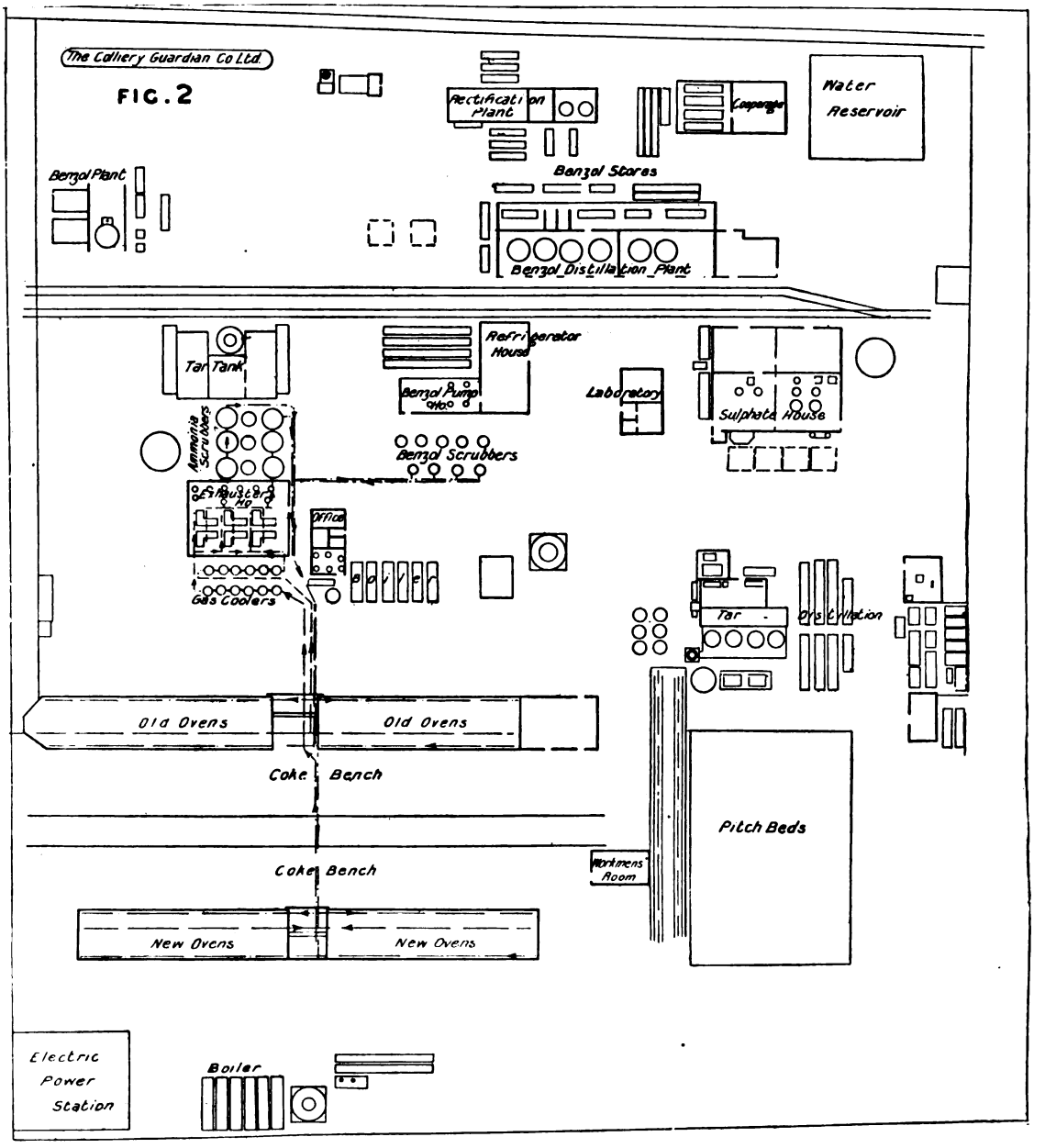

FIG. 1565.—DIAGRAMMATIC SKETCH OF COKE OVEN AND BY-PRODUCTS PLANT AT PORT CLARENCE.

then enters a Wilton saturator, where it comes into contact with sulphuric acid forming sulphate of ammonia, which is then pumped out by means of a steam ejector, thence to a centrifugal machine, where it is dried and the surplus liquor returned to the saturator.

The production of the plant is about 7½ tons per day, equivalent to about 25 lb. of sulphate of ammonia per ton of coke.

The coke oven gas, after leaving the ammonia scrubbers, goes to benzole scrubbers, where it is washed with creosote oil. This creosote oil is cooled by means of a large Linde refrigerating plant down to about zero Cent. By this means the absorbing power of the creosote oil is very largely increased and a much better yield of benzole obtained. All the scrubbers, receivers, pipe lines, &c., of this part of the plant are insulated with cork material, and it is the only plant of this nature in this country. After leaving the benzole scrubbers, 80 per cent. of the gas is returned to the ovens for heating further charges of coal, while the remaining 20 per cent. of gas is partly used in the benzole plant, partly in the tar distillation plant, and partly burnt in torches, as sufficient surplus power is obtained from waste heat. The benzolised oil obtained at the benzole scrubbers is distilled when an 80 per cent. product is obtained, which is afterwards washed with sulphuric acid and other chemicals to remove the impurities, and is finally rectified in two large rectification stills heated by steam. The products obtained are:—Pure and 90 per cent. benzole, pure and 90 per cent. toluole, solvent naphtha, xylol and heavy naphtha. This is sent out in iron drums, wooden barrels, or tank wagons. The tar obtained at these works is now distilled in a tar distillation plant which has been recently added. This is of the latest type, under vacuum, and the products obtained are:—Creosote oil, anthracene oil, naphthalene, anthracene, pitch and carbolic acid. The oils obtained in distillation are allowed to cool, when they deposit anthracene and naphthalene respectively, the former of which is treated in an hydraulic press working under a pressure of 2 tons per square inch. The anthracene oil is treated in filter presses, and the pitch remaining as residue in the stills after the oils have been distilled off is cast in large beds preparatory to being shipped. This material is taken directly to the adjoining wharf and put aboard ships, which take it to the Continent, where it is very largely used for briquette-making.

On the works there is also a large cast iron water reservoir holding 300,000 gallons, equal to one day's requirements. This is kept constantly filled as a stand-by in case of breakage in the water mains.

Another horizontal-flued oven (with the exception of the non-recovery oven, which has vertical flues) is that built by the Simplex Coke Oven and Engineering Company Limited, a battery of 100 by-product ovens being shown in fig. 1593 (page 749). These ovens are built either as simple non-recovery ovens, by-product

ovens without regenerators, and regenerative by-product ovens. The first, of course, is for coking coal containing so small a proportion of volatile matter that the recovery of the by-products is not worth while, and the second and third only differ as regards the regenerators. Whether the ovens should be of the regenerative class or not depends solely upon the quantity of gas required for other purposes over that merely required for heating the ovens, and raising steam for ordinary purposes. For instance, if only sufficient waste heat is required for generating power for driving the various machinery connected with the coke ovens and adjacent colliery, then it will not be necessary to adopt the regenerative class, but if as much spare heat as can possibly be obtained can be usefully employed either in gas engines or through boilers and steam engines for generating electricity to be transmitted for either lighting or power purposes, then undoubtedly the latter type of oven should be employed. Regenerators, however, are costly to construct and maintain.

The non-recovery oven is shown in figs. 1566, 1567, and 1568, from which it will be seen they are arranged in pairs, which are charged at intervals of approximately half the time required for coking. Thus, if it takes, say, forty-eight hours to carbonise the charge, twenty-four hours will elapse between the charging of No. 1 oven and the charging of No. 2. The combustible gases given off in No. 1 oven pass through openings *a* into oven No. 2, where they mix with the gases already in this oven, and pass through the small openings into the vertical flues *b*, where they mix with air which enters at *c*. Combustion takes place in these flues, and the gases pass into the sole flues *d*, from whence part of them pass directly into the main flue *g*, by means of the conduit *e*, which is controlled by the damper *f*. The other part is led through sole flue d^1 and reaches the main flue by means of the conduit e^1, which is controlled by the damper f^1. From this main flue *g* the waste heat is conducted under boilers, and with these, of the Lancashire type, about 1 lb. or over of water will be evaporated for every 1 lb. of coal charged into the ovens.

The construction of the ovens for the recovery of the by-products is shown in figs. 1569 to 1574. These are the regenerative ovens, whilst those without regenerators are shown in figs. 1575 to 1580. As will be seen, in both cases the flues are horizontal, and as shown, the ovens are charged from the top. They may, of course, be charged with compressed charges of coal if desired.

Referring to the regenerative oven, the crude gas rises through the ascension pipe H into the gas collector I, and through the suction pipe J to the recovery plant, and returns to the oven by the pipe K. The gas from this pipe is delivered into the distributing pipe M intermittently by means of the pulsator L. Combustion of the gas takes place at the burners N on one side of the oven, where it meets the hot air, which has previously passed along the flues G. The hot products of combustion then travel along the flues O, and down P into the chamber Q, through the conduits

Fig. 1566.

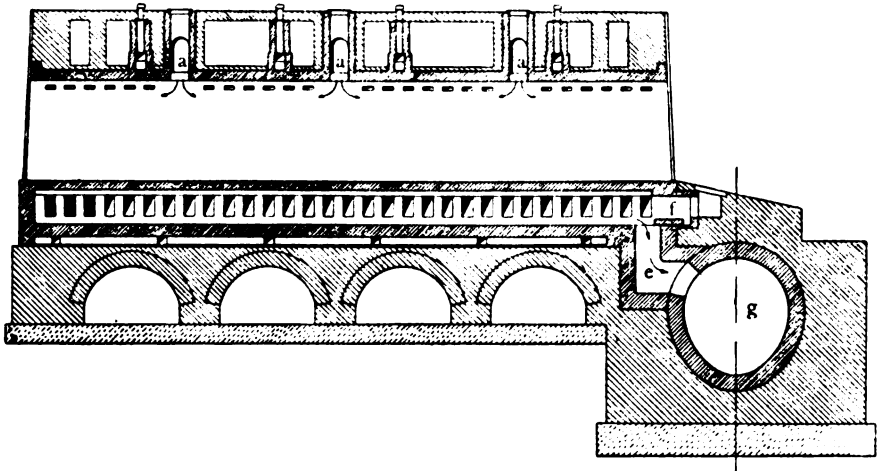

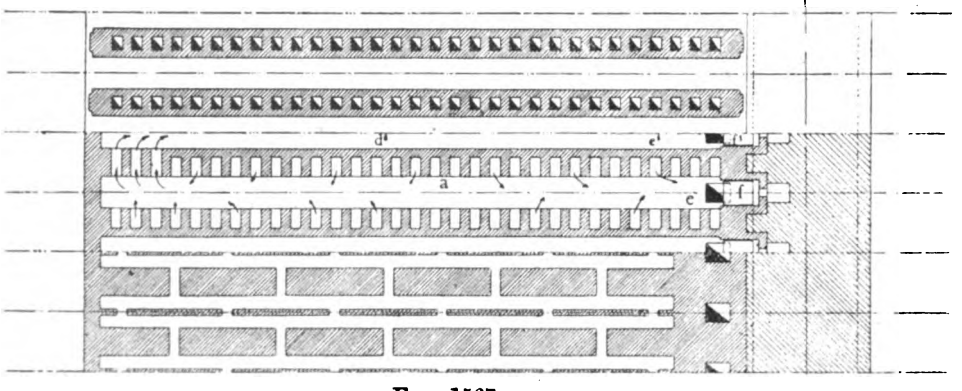

Fig. 1567.

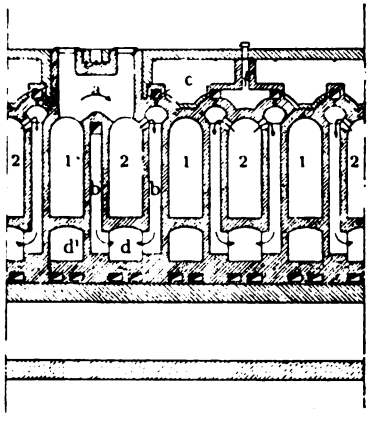

Fig. 1568.

Figs. 1566 to 1568.—Simplex Non-Recovery Coke Oven.

R, controlled by the dampers S, into the regenerator T, where the surplus heat is absorbed, and finally passes into the main flue U to the chimney stack through the draught-reversing dampers. The cold air is admitted by the general inlet flues A and A_1, and on one side is distributed by the flue A_2 into the regenerator B by means of the conduit C, where it is heated by means of the heat accumulated in the chequer work. The air—now hot—passes through the conduit C_1, controlled by the damper D, into the chamber E (fig. 1569) and into the vertical flues F, and along the horizontal flues G, where it meets the gas at N. In heating the air the regenerator B becomes, of course cooled, but T during the same period has become very hot; and reversal then takes place by changing the reversing dampers which control the battery of ovens and which are placed near the chimney. The cycle of the direction taken by the air and products of combustion is then—for the air—from A to U through the regenerator T, through Q to the flues P and along the horizontal flues O, where it meets the gas at N; then the products of combustion pass along G, down F, into the sole flue E, and by means of C_1 into the regenerator B, to the main flue A_2. At the moment of reversal the gas is shut off, and after the reversing dampers are changed the supply is resumed.

The novel feature of these ovens is that the supply of gas is not continuous to the heating flues, but supplied intermittently by the "pulsator," which is shown in figs. 1581, 1582, and 1583. As will be seen, it consists of a rotary valve driven by means of a sprocket wheel and chain, by a small electric motor. The valve revolves very slowly at a speed of 30 to 40 revolutions per minute. It is claimed for this arrangement that combustion of the gas is retarded to the extent necessary to cause it to take place slowly but simultaneously at all points of the heating flues, in which the gas and air are made to travel. The rate of combustion depends solely upon the speed with which the gas and air mix, this mixture being so regulated that it does not become complete until the products of combustion are leaving the heating flues. It is difficult to see, however, how any better results can be obtained from this principle except that the supply is *mechanically regulated*, instead of the usual arrangement in which the gas supply is regulated, by means of a cock, by the attendant, and in which the result depends very much upon his good or bad judgment. It is quite conceivable, especially where the gas regulation is in passages under the ovens, or on one side below the ground level, for the gas regulation to be so badly attended to, that very great harm is done by local over-heating, or what is often as bad, "under-heating," as frequent dark patches on the oven walls spoil the coke.

The reversing dampers are shown in figs. 1584, 1585, and 1586, and as will be seen are particularly well designed and very simple in operation. As shown, the left-hand damper is closed to the chimney draught, whilst that on the right is under

LIBRARY
OF THE
UNIVERSITY
OF

its influence. Consequently cold air is drawn into the left-hand flue through the opening immediately above the damper, through the left-hand regenerators and flues in connection with them, back along the right-hand regenerators, and through the damper opening to the chimney. By turning the hand winch the dampers are very quickly changed over.

In the non-regenerative oven the construction is practically identical with the regenerative oven, as will be seen from figs. 1575 to 1580. The crude gas from the coking coal rises through the ascension pipe H, gas collector I and main J to the by-product plant, and returns by means of the pipe K, pulsator L and distributing pipe M to the burners N, of which there are four for each oven, which corresponds to the number of flues.

The air necessary for combustion is drawn in with the gas at the nozzles N, and the products of combustion pass along the horizontal flues O, and down the vertical flues P. The burnt gases from the lower two flues pass through the openings (figs. 1575 and 1579) into the sole flue Q, and thence by means of the conduit R, to the main flue U; whilst those from the upper flues pass through the openings F (figs. 1576 and 1580) into the sole flue of the adjoining oven, and thence by the conduit Q_1 (fig. 1579) by a similar conduit (R, fig. 1575) to the main flue U. Both the conduits R are controlled by dampers S.

From the main flue the gases are drawn by the chimney draught through boilers for the purpose of raising steam.

These ovens may be charged from the top, in which case the coal has to be levelled as it is loaded, and figs. 1587, 1588, and 1589 show a combined mechanical coal leveller, and coke pusher for discharging the ovens at the end of the coking period. The machine is driven by an electro-motor, and the leveller consists of a long beam supported upon rollers, with three pairs of short side arms for distributing the coal over the width of the oven. At the front end are fixed two guide rollers over the beam to prevent any possibility of it tilting. The beam is operated by means of a long rocking arm which is driven by means of a crank and connecting rod.

The coke pusher consists of the usual ram supported upon rollers and driven by means of a rack and pinion.

Figs. 1590, 1591, and 1592 show a combined coal-compressing and charging machine and coke ram for discharging. The coal-compressing box consists of two movable vertical sides and bottom peel supported upon rollers, with stamping apparatus above. When the coal is compressed the sides may be eased back and the compressed cake of coal resting on the peel is pushed into the oven. The oven door is then lowered into position and the peel withdrawn. The coke ram is the same as previously described.

Fig. 1593 is from a photo of a battery of 100 by-product coke ovens at the works of the Staveley Coal and Iron Company Limited, Barrow Hill, near Chesterfield, which, however, are an older type of oven than is now built by the Simplex Coke Oven Company.

In the recovery of the by-products the gases are first cooled down to atmospheric temperature by means of cooling serpentines such as shown in fig. 1594, and annular air- or tubular water-cooling towers being drawn through these by the gas exhausters shown in fig. 1595. Part of the ammoniacal liquor and tar is brought down by the cooling towers, and passes off through seal pots at the bottom into storage tanks. The remainder of the tar is extracted from the gas by forcing it through a Pelouze and Audouin tar extractor, an improved type of which is shown in fig. 1596, by Messrs. W. C. Holmes and Co. This apparatus consists of three sections, the lower inlet chamber, the drum seal, and the upper outlet chamber. The drum is formed of rows of perforated plates, which can be readily detached and taken out for cleaning purposes. The gas passing through the small holes impinges upon a plate at the back, which causes the particles of tar to deposit upon the plate, and coalescing, runs off through the sealed outlet shown on the right. The drum is supported by means of a rod passing through the seal column on top of the outlet chamber, and a wire rope passing over a pulley and fastened to balance weights. This enables the drum to rise and fall according to the inflow of gas, without any variation in the pressure. The drum is further provided with relief valves, which are normally held closed by springs, but which are automatically opened by means of stops, should the drum descend too far by the accidental breakage of the supporting rope.

The gas being relieved of the tar is then passed into the scrubbers, which are either of the tower, or revolving type, the latter, by Messrs. W. C. Holmes and Company, being shown in fig. 1597, where the ammonia is finally extracted, and the gas then returns to the coke ovens for heating purposes, while the ammoniacal liquor runs into storage tanks, from which it is pumped into elevated tanks from whence it flows to the ammonia stills in the sulphate house.

The ammoniacal liquor, before passing on to the distillation stills, is sent through a multitubular superheater, and thence to the still, which is divided into compartments, and in descending meets with steam entering at the bottom ; about half way down milk of lime is added to the still, and the distilled ammonia vapour and steam are conducted to the "saturator," while the waste liquor flows off into settling tanks, in which the solids are precipitated. Fig. 1598 shows the still, and on the right the centrifugal drier for draining the sulphate of ammonia after it comes from the saturator.

The saturator consists of a thick lead-lined wood box containing sulphuric acid,

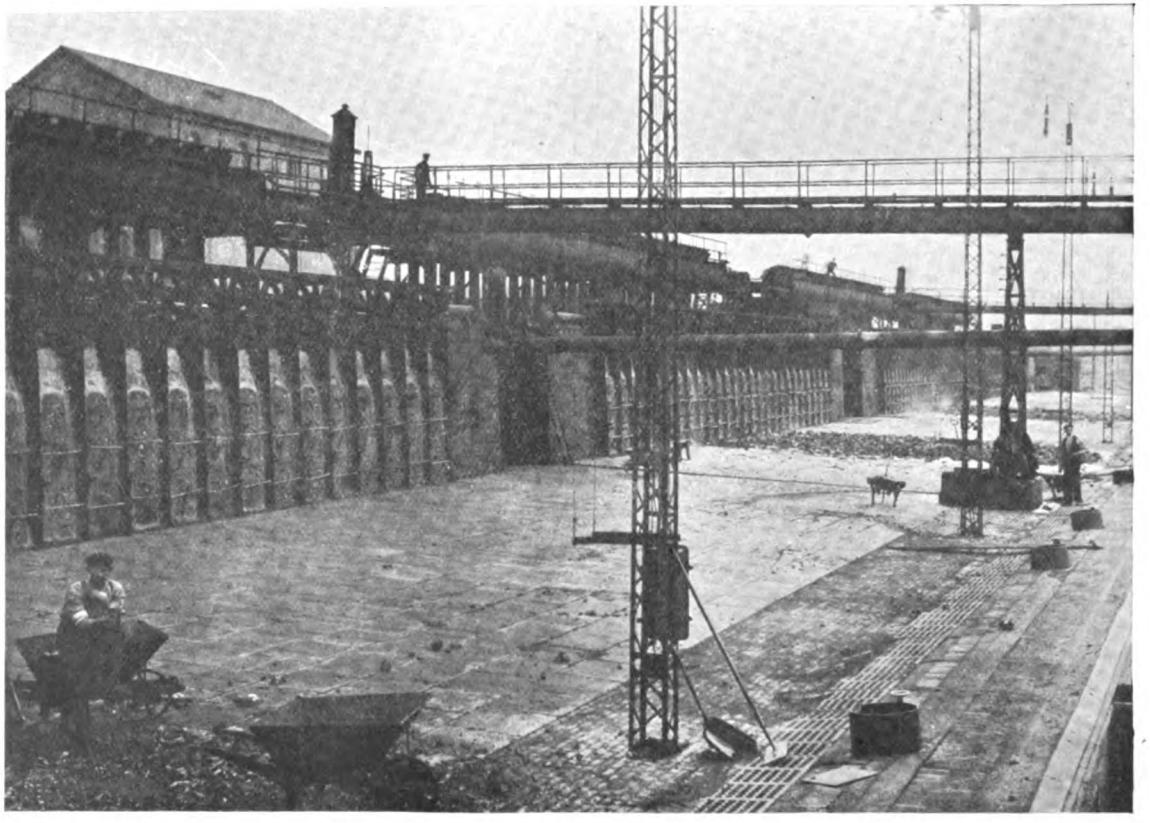

FIG. 1593.—SIMPLEX COKE OVENS AT BARROW HILL, NEAR CHESTERFIELD.

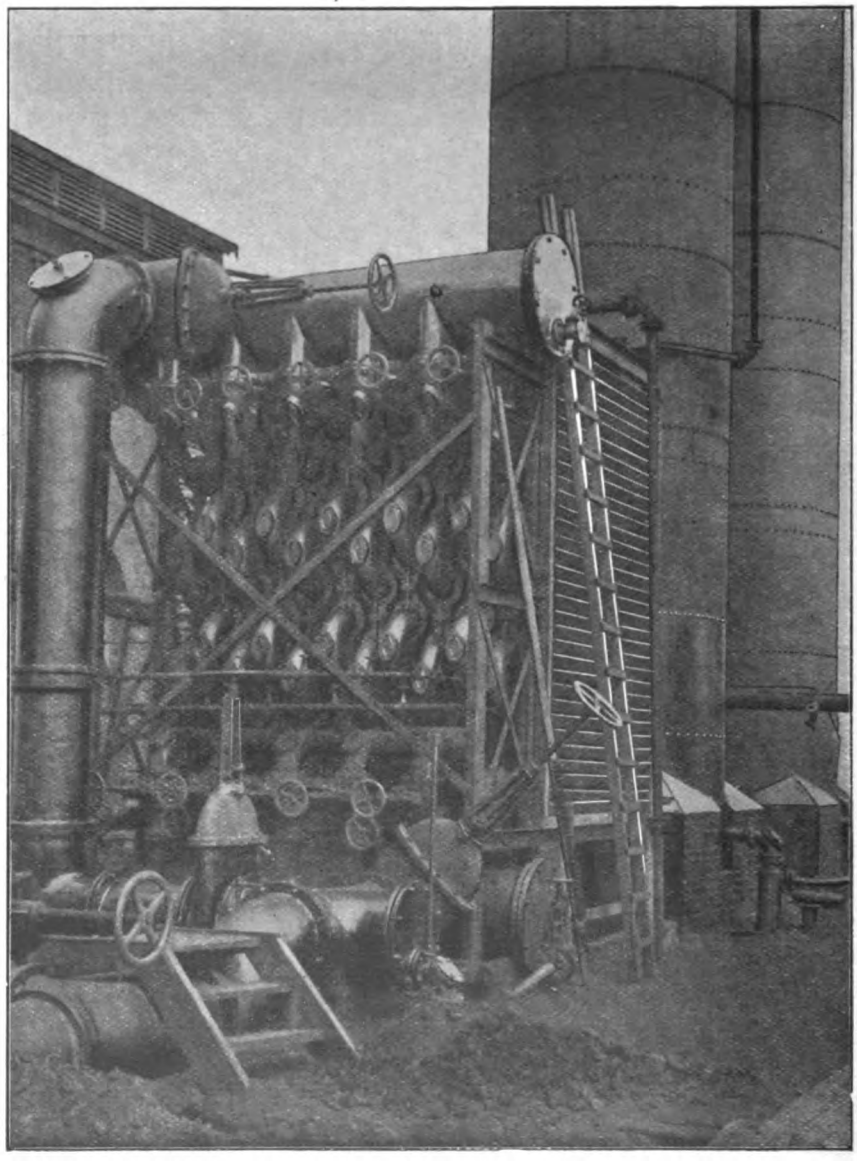

FIG. 1594.—SERPENTINE COOLER WITH BY-PASS ARRANGEMENT.

PLATE CXLI.

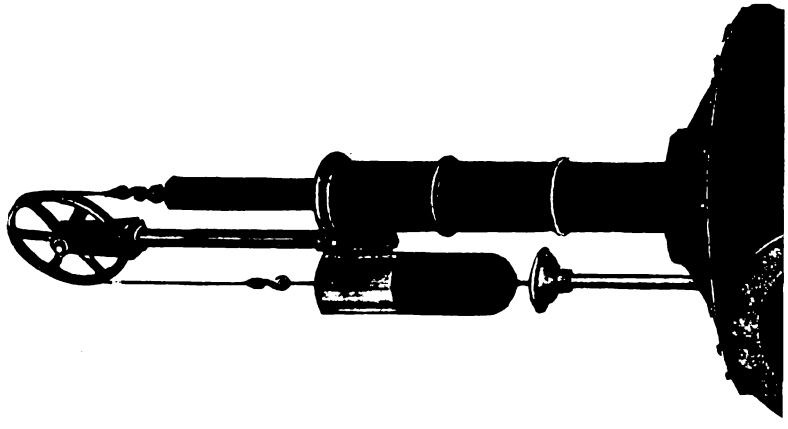

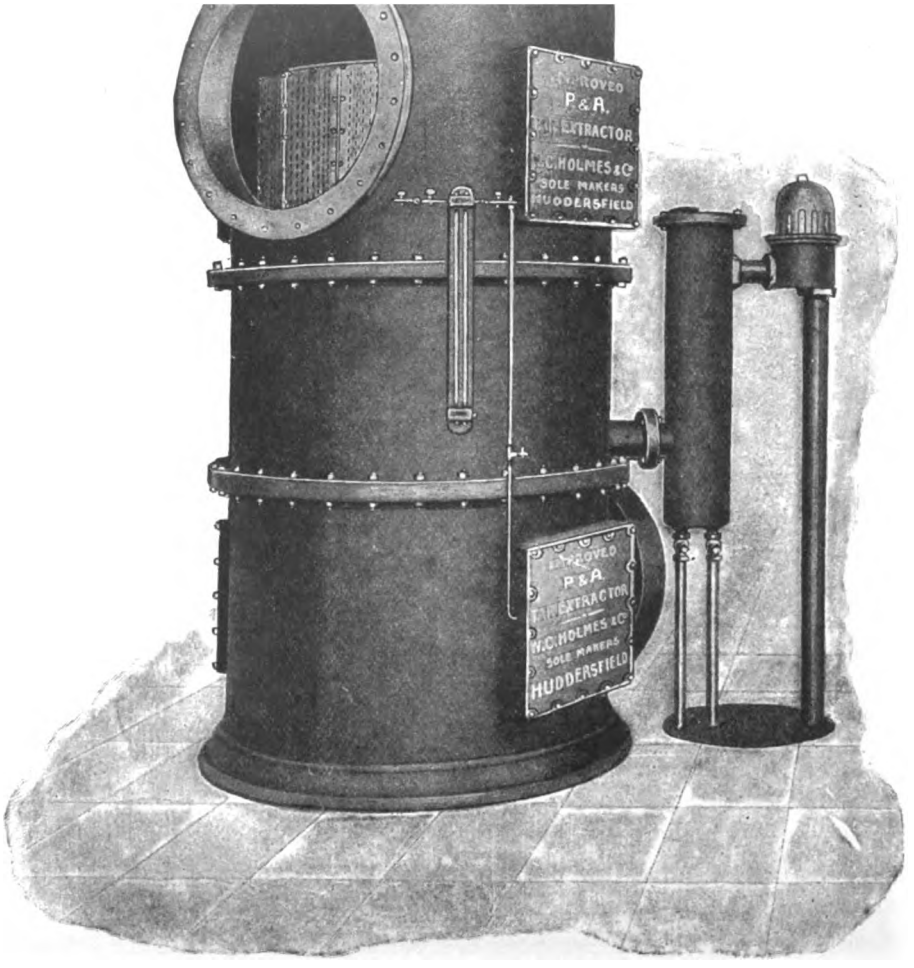

FIG. 1596.—IMPROVED PELOUZE AND AUDOUIN TAR EXTRACTOR BY W. C. HOLMES & CO.

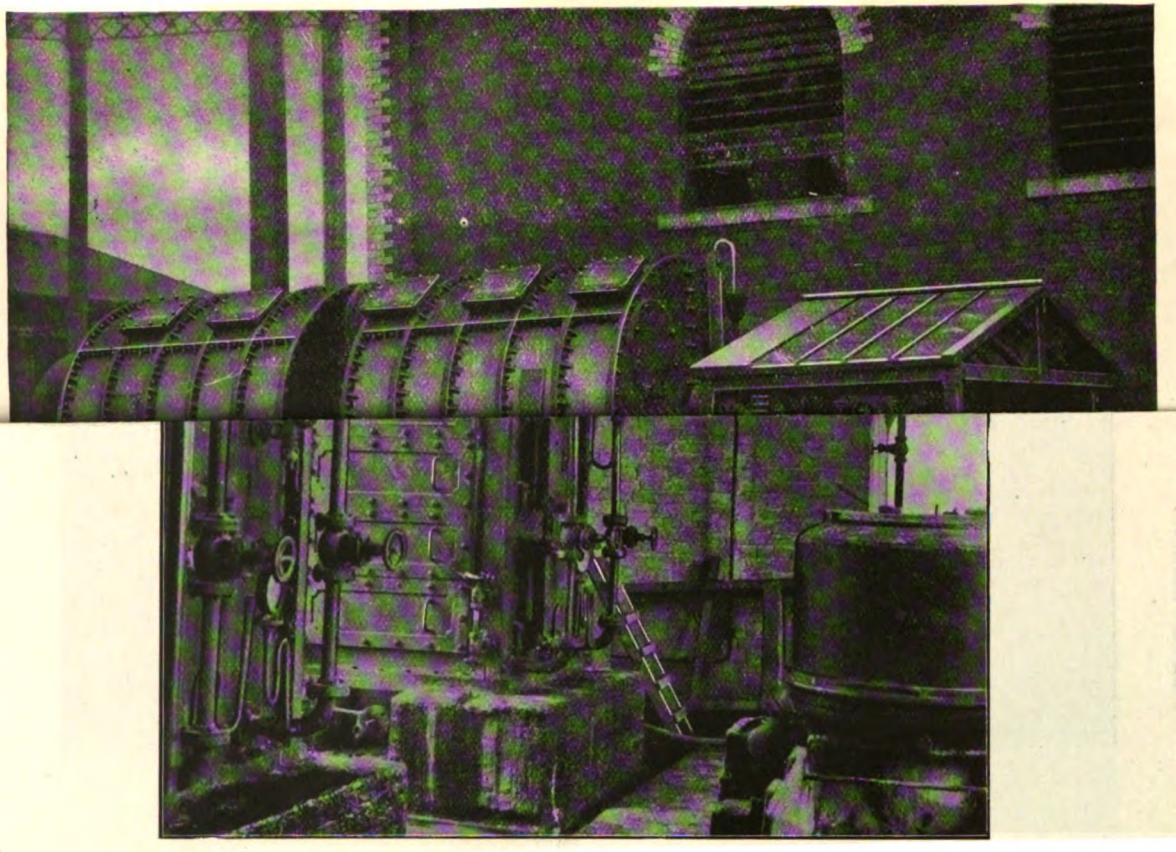

FIG. 1598.—SIMPLEX COKE OVENS—INTERIOR OF SULPHATE HOUSE, SHOWING STILLS AND DRIER.

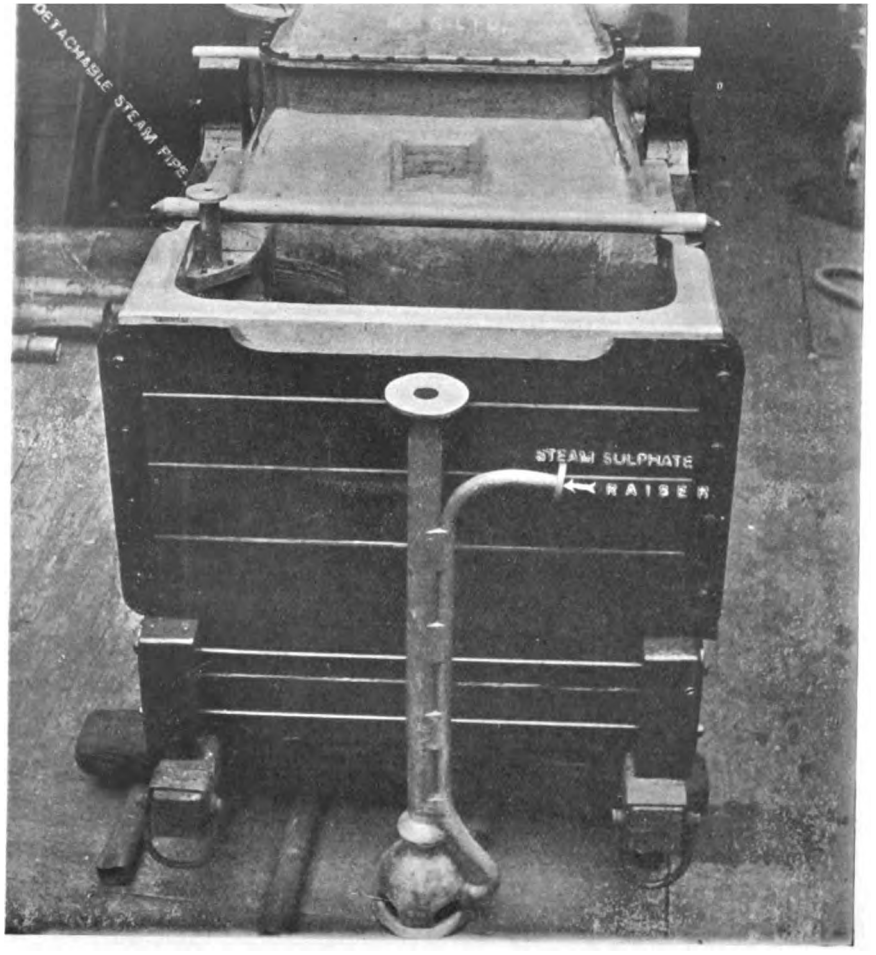

LIBRARY OF THE UNIVERSITY OF CALIFORNIA

FIG. 1600.—STEAM EJECTOR SATURATOR BY MESSRS. JOS. TAYLOR & CO.

with one part enclosed and having an inclined bottom. The ammonia vapour is conducted into this closed part, and rising through the sulphuric acid forms crystals of sulphate of ammonia, which fall down the inclined bottom into the open end, from which they are "fished" out by scoops. One of these, by Messrs. Jos. Taylor and Co., is shown in fig. 1599. In other cases the sulphate is ejected by steam or is

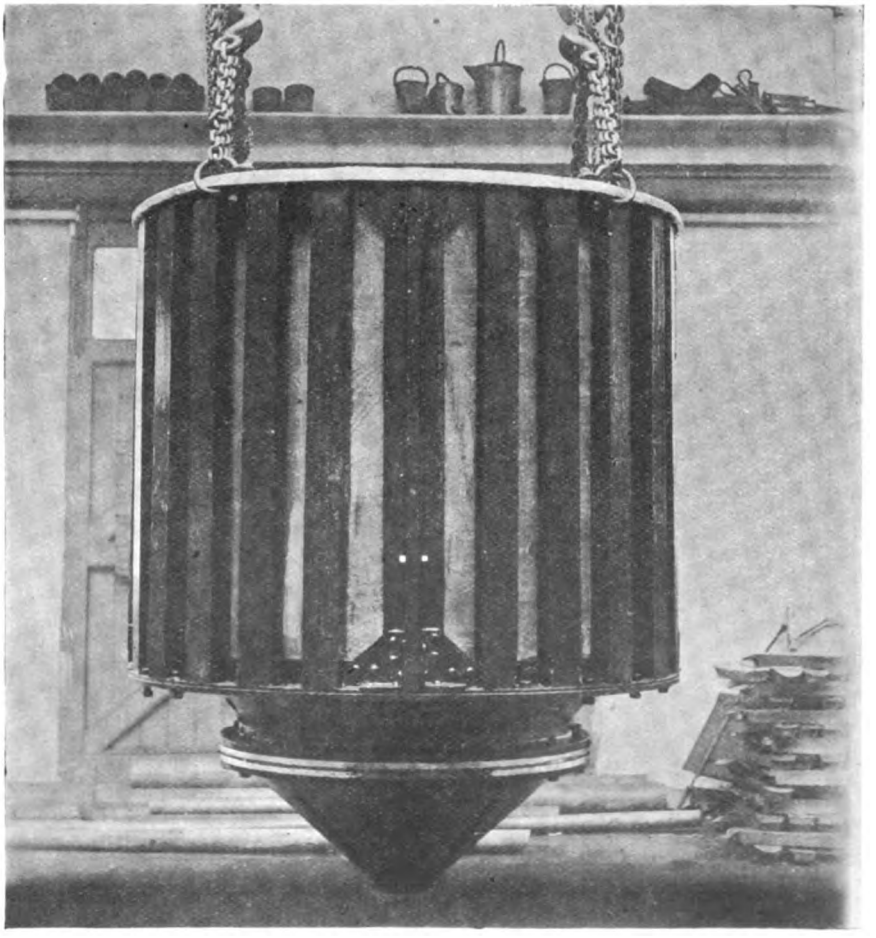

Fig. 1601.—Body of Circular Saturator by Messrs. Jos. Taylor & Co.

self-emptying by means of a valve at the bottom of the "well." Fig. 1600 shows a saturator by the same firm for steam ejecting, while fig. 1601 shows the body part of a closed circular saturator with discharge hopper, which is fitted with a valve. The advantage of the open type saturator is that tests of the liquor are easily obtained and the scum can be skimmed off.

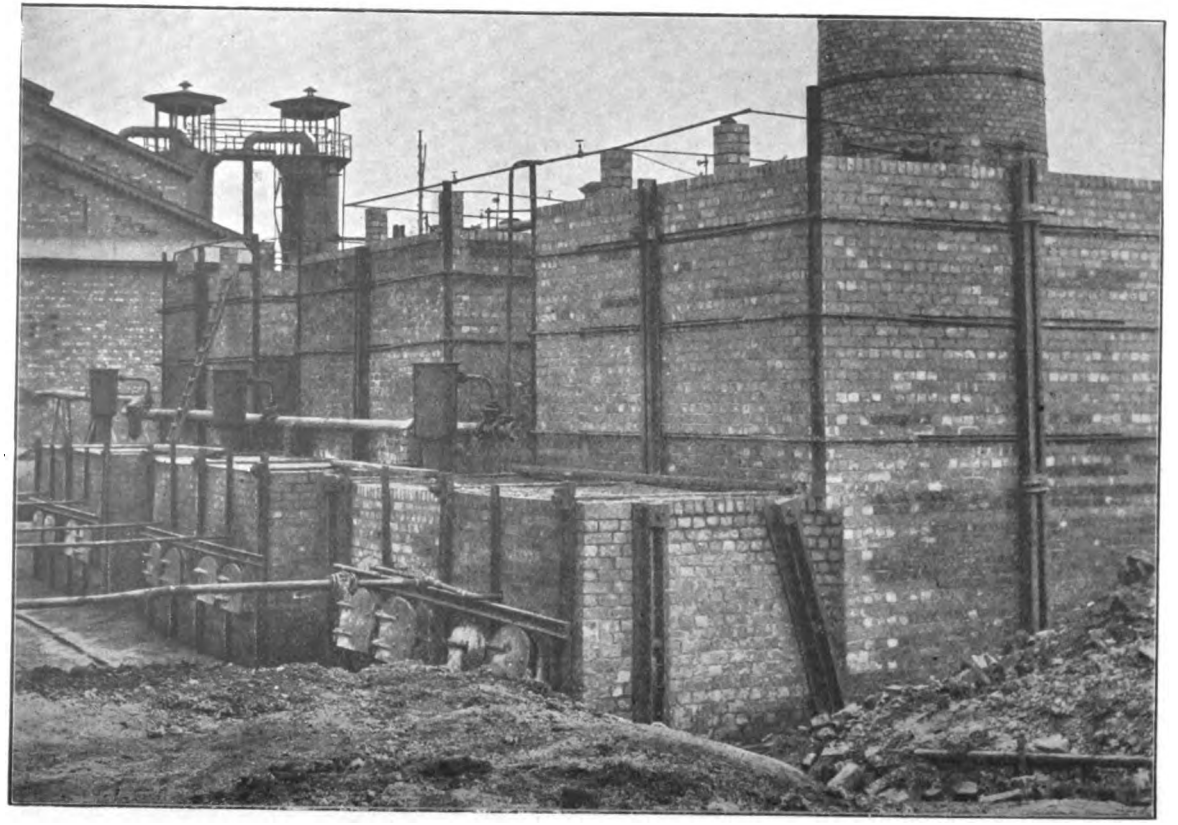

FIG. 1602.—SIMPLEX COKE OVENS: VIEW OF PORION EVAPORATING OVENS.

The sulphate of ammonia is then put into centrifugal driers, which throws off all surplus liquor to be returned to the saturator, or the mother liquor pot.

There is left, however, a quantity of waste or effluent liquor which is very noxious, and on account of its objectionable features is difficult to dispose of. One method adopted by the Simplex Coke Oven Company is to evaporate it by means of a Porion evaporating oven. The effluent is made to flow into the oven, where it is splashed up or agitated by means of a large paddle or agitator into sprays or drops, which meet with a hot flame passing over the liquor obtained from the waste gas, or from a hand-fired furnace. Fig. 1602 shows the evaporating plant at Hemsworth Colliery.

Another horizontal-flued oven is the Mackey-Seymour oven shown in fig. 1603. The main features of this oven is the arrangement of the side flues and the method of pre-heating the air. As will be seen, there are four flues A, B, C, D, which receive a supply of gas from both ends, there being return gas pipes at both the charging and discharging sides of the battery. The air entering by the foundations and through the chequer brickwork next the main chimney flue becomes heated before passing through conduits, as shown, to the flues at either end. The products of combustion then pass along the top flue A, turning at the end into B, where it receives a further supply of gas and air, turning again half way along into C, and thence into the waste gas flue. At the discharge end of flue B the products of combustion travel half way along, turn back, and receiving a further supply of gas and air, turns into D, and along to the waste heat or sole flue under the oven. The regulation is controlled by the dampers E and G, while a damper H regulates the main chimney draught, or isolates the oven altogether. The heat of the flues can thus be regulated to a nicety, and the top flue may be slightly lower than the bottom, which is a distinct advantage in preventing decomposition of the gas given off during the coking process. Further, the ovens are built with a centre partition wall between each oven similar to the Semet-Solvay oven, and therefore has all the advantages of strength and substantial construction. The inspection of the flues, as well as the regulation of gas and air, is easily performed, and hence the risk of local overheating or dark patches through carelessness of the attendant is reduced to a minimum. Messrs. the Mackey-Seymour Engineering and Coke Oven Company Limited also construct a regenerative oven on the same principle, except that five straight flues take the place of four divided flues in the non-regenerative oven.

This firm also construct ovens with vertical flues either on the non-regenerative or regenerative principle, the latter being shown in figs. 1604, 1605, and 1606. In this oven the distribution of gas and air takes place below the flues, and as will be seen, the gas and hot air entering from below ascends every alternate flue, the

products of combustion descending to the regenerator to be heated by the two sole flues, each flue being connected to the upper and lower alternately. On reversal of the regenerators the burner flue becomes the return flue. The supply of gas and working of the dampers is regulated from each side for half the oven so that every portion of the heating surface is under control from either the front or back of the oven.

Fig. 1607 shows a battery of ovens at the Emley Moor Collieries, Skelman-

FIG. 1604.

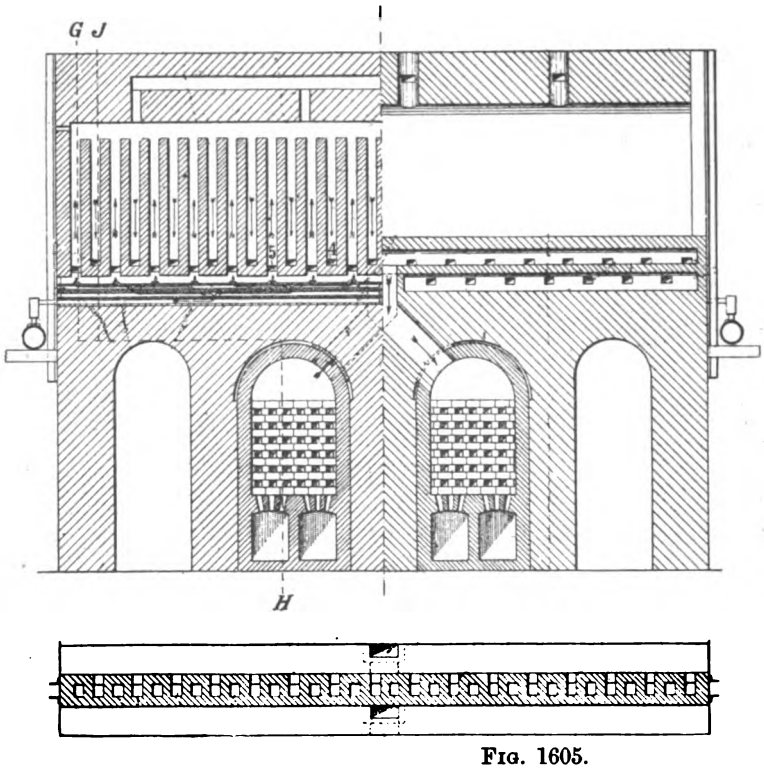

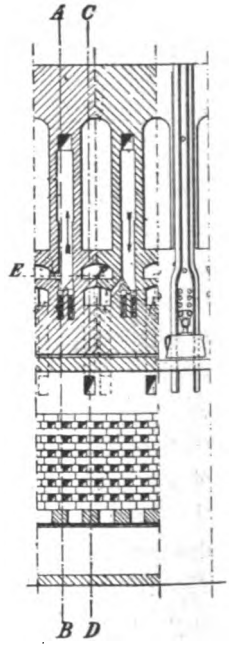

FIG. 1606.

FIG. 1605.

FIGS. 1604 TO 1606.—MACKEY-SEYMOUR VERTICAL-FLUED REGENERATOR OVEN.

thorpe, while fig. 1608 is a view from the front of ovens showing the compressing and charging and discharging machine and the ferro-concrete coal bunker. Fig. 1609 is a general view of by-product coke ovens with gasworks plant. The gas holders are shown on the left.

The Koppers vertical-flued oven has met with considerable success in this country, and there can be no doubt it is a well-designed oven, the chief feature being the regulation of the chimney draught from each individual flue. Otherwise

PLATE CXLV.

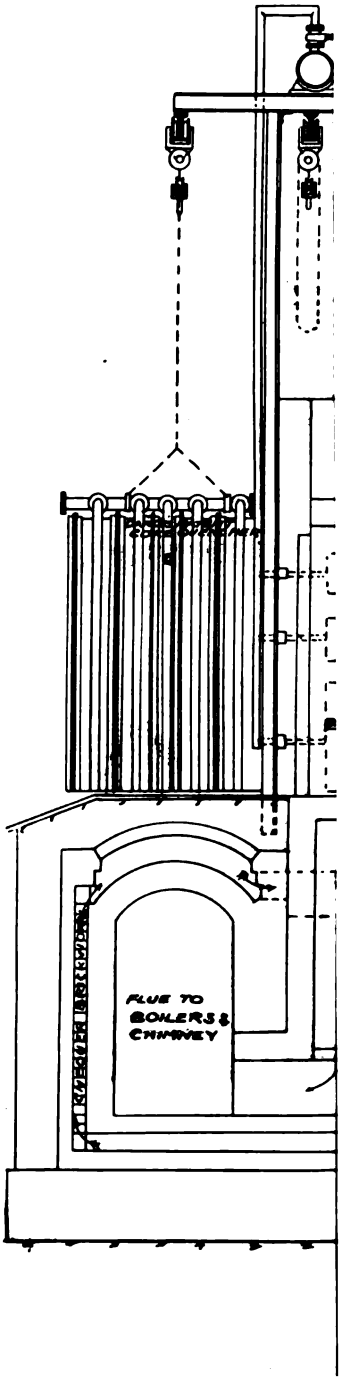

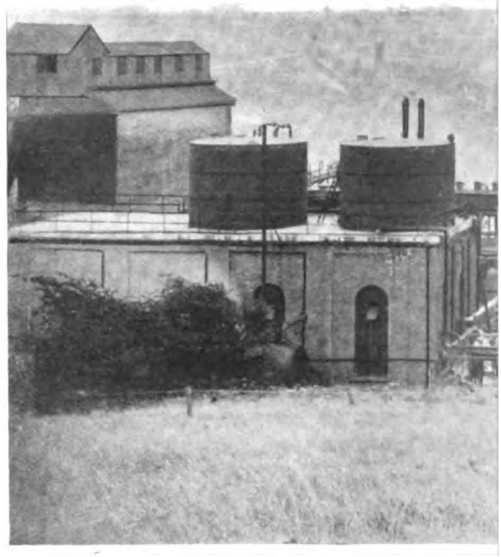

FIG. 1607.—GE

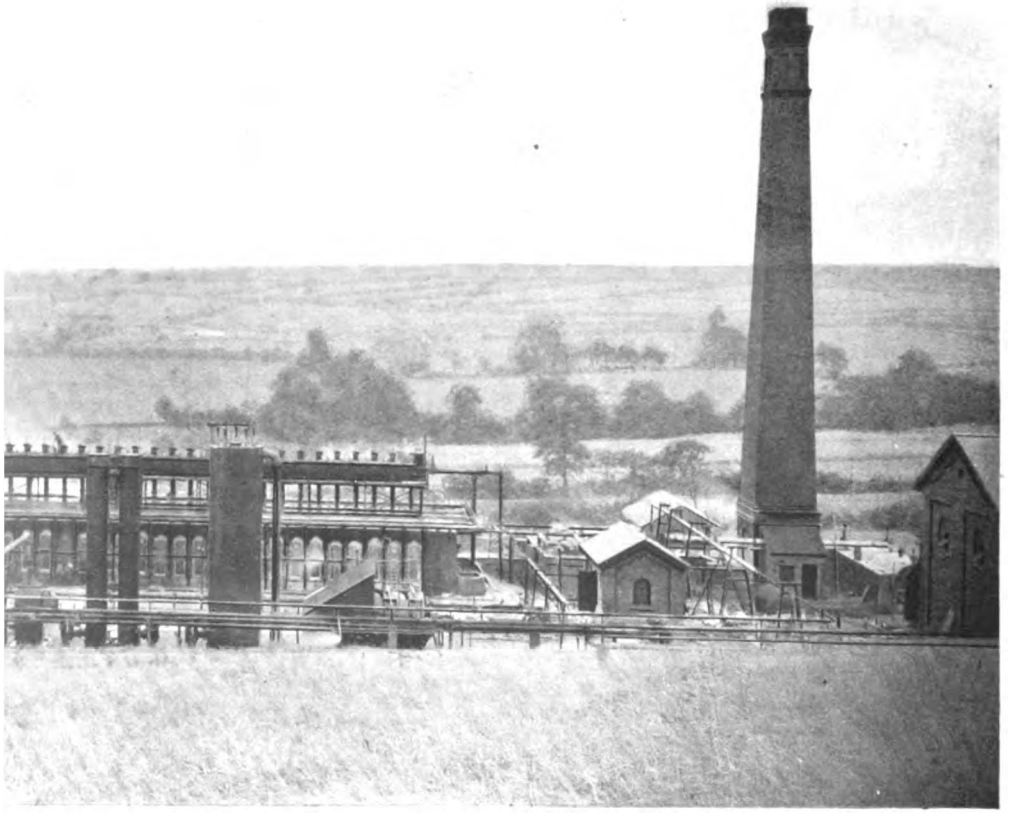

ERAL VIEW OF BATTERY OF MACKEY-SEYMOUR COKE OVENS.

PLATE CXLVII.

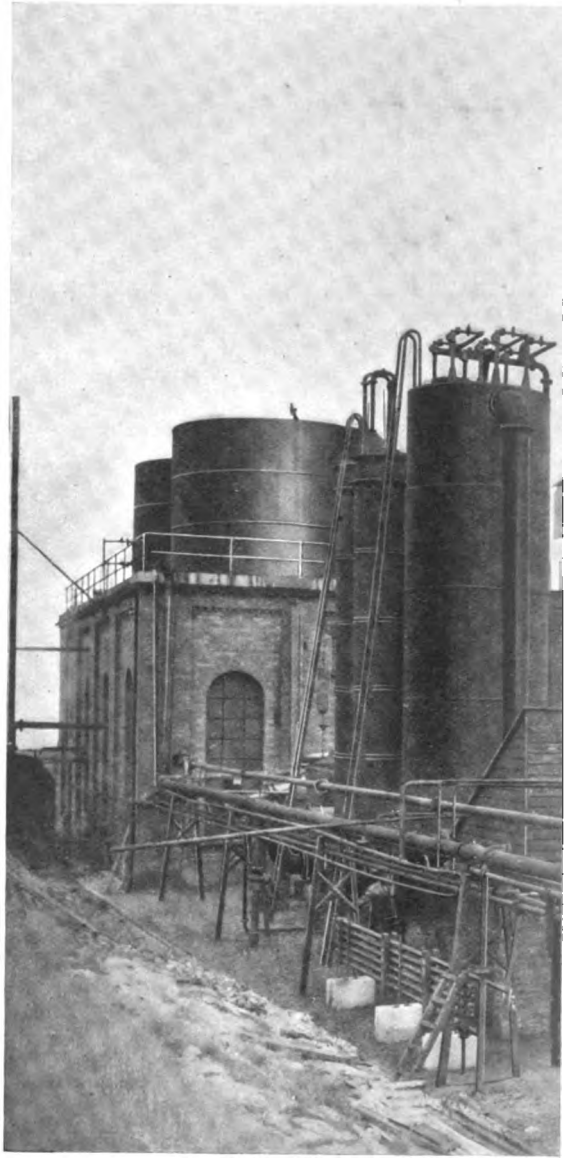

Fig. 1609.—

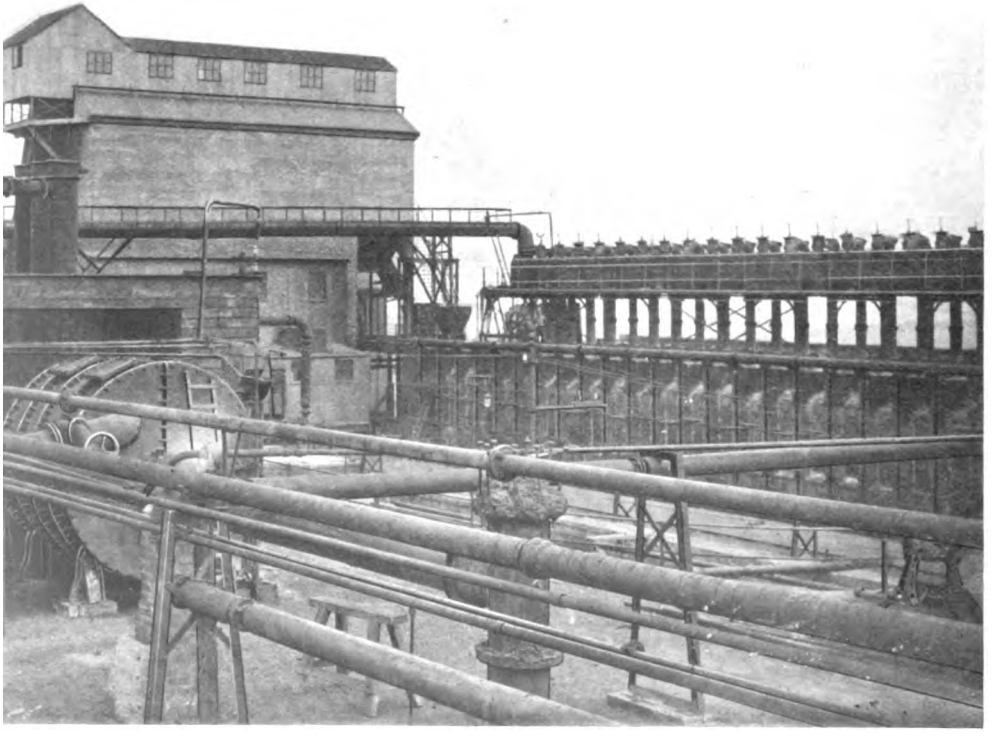

VIEW OF GAS WORKS TYPE BYE-PRODUCT PLANT.

LIBRARY
OF THE
UNIVERSITY
OF
CALIFORNIA

KOPPERS' WASTE HEAT COKE OVEN.

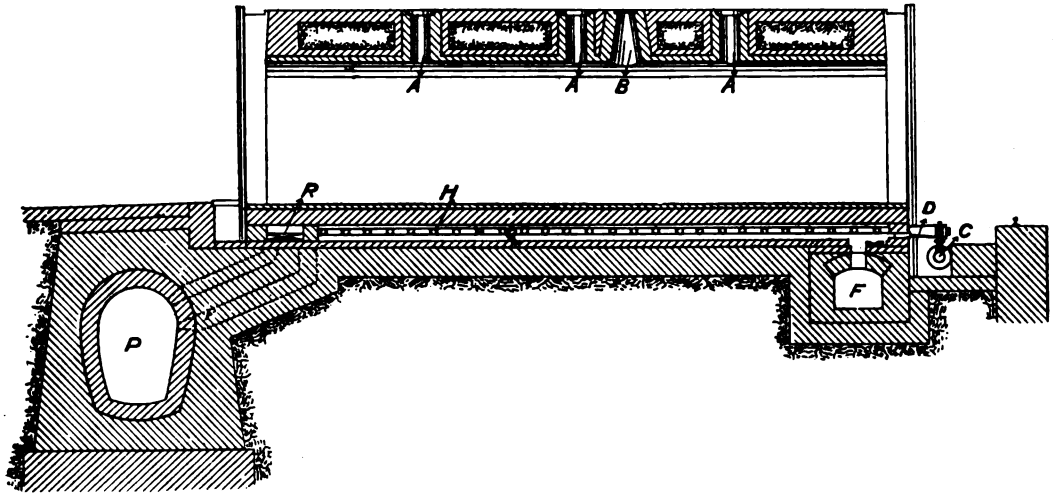

FIG. 1610.—LONGITUDINAL SECTION THROUGH THE OVEN-CHAMBER.

Scale, 10 feet to 1 inch.

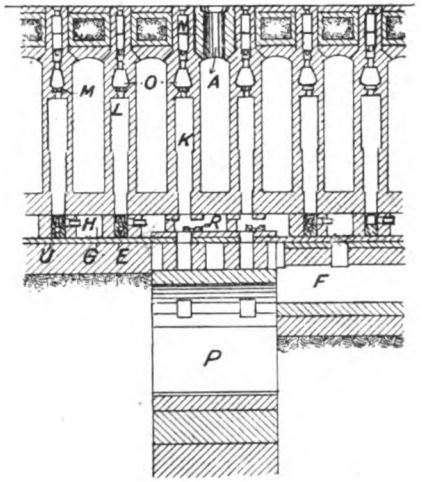

FIG. 1611.—THREE CROSS-SECTIONS THROUGH OVENS.

KOPPERS' WASTE HEAT COKE OVEN.

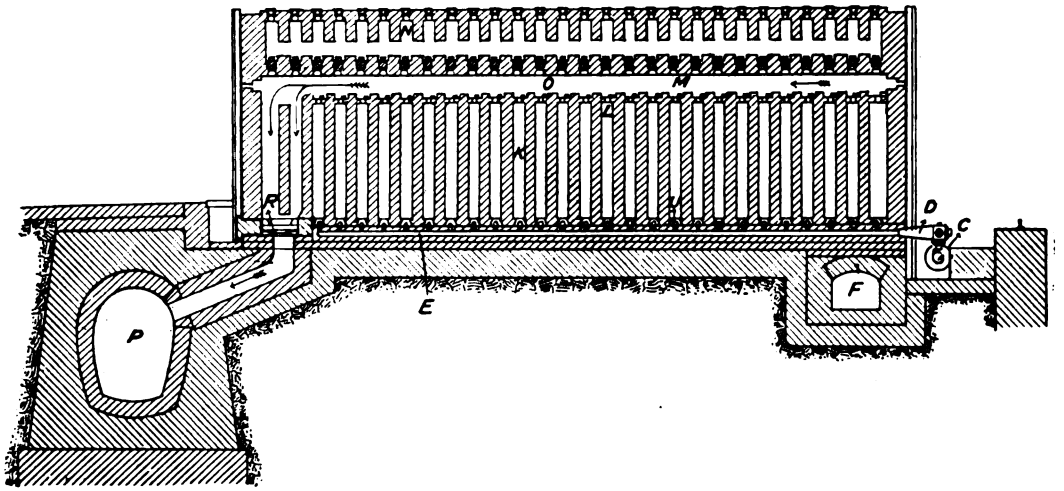

FIG. 1612.—LONGITUDINAL SECTION THROUGH HEATING FLUES.

Scale, 10 feet to 1 inch.

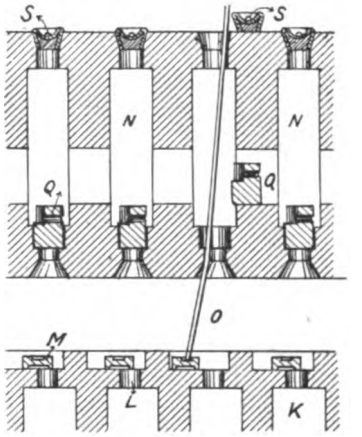

FIG. 1613.—LONGITUDINAL SECTION THROUGH HEATING FLUES.

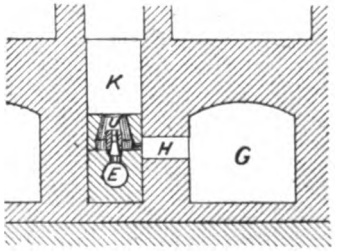

FIG. 1614.—CROSS SECTION THROUGH GAS NOZZLE.

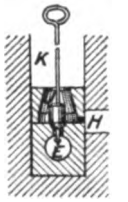

FIG. 1615.—CROSS SECTION THROUGH GAS-NOZZLE.

Scale, 2½ feet to 1 inch.

it is, of course, very similar to other designs, and, in fact, is not so good as some when looked at from the point of view of strength and reliability; but it is only fair to add that this mainly depends upon what the owners are prepared to expend in capital cost, which more or less applies to nearly all designs of ovens.

There are two types of ovens—namely, the waste heat oven and the regenerative oven—the former being shown in figs. 1610, 1611, and 1612. The oven chamber is 32 ft. 10 in. long by 6 ft. 7 in. high, and from 20 in. to 24 in. wide, which dimensions vary to some extent with the class of coal to be dealt with. A are the charging holes when the oven is charged from the top, and the crude gas passes off through the opening B, and after going through the by-product plant returns by the main gas pipe C, which is in a convenient position for easy access. Separate branch supply pipes D, fitted with a regulating cock, distributes the gas to each oven by means of the gas channel E, formed of firebrick pipes, immediately below the heating flues. The air necessary for combustion flows along the conduit F, and from thence into the air channel G, also situated immediately below the oven chamber. At the bottom of each flue K, is fixed a gas nozzle U, and an opening H puts this into communication with the air channel G, as shown in the enlarged detail fig. 1614. Combustion takes place a little above the gas nozzle, and the cold air surrounding and flowing past it keeps it to some extent cool, and thus in some measure prevents it from setting fast. The products of combustion pass up the flues, through the small opening L at the top, along the channel at the top O, and down the two end flues to the main waste gas flue P, the outlet being regulated by the damper R. At the top of each flue K, as already mentioned, is a small opening L, which is fitted with a damper M, as shown in the enlarged view fig. 1613, and this damper is regulated by a rod through the opening N, by removing the plugs S and Q. These openings also admit of the gas nozzle U being withdrawn by means of a tee-ended rod as shown in fig. 1615. Spy holes are provided at each end of the channel O, and thus every flue can not only be inspected, but the regulation of gas and air in each flue is an easy matter to effect perfect combustion.

The regenerator oven, figs. 1616, 1617, and 1618, is designed on similar lines to the waste heat oven, with the exception that the air for combustion is pre-heated in regenerators. In this case the air enters along the passage ways A, at both ends of the oven, and from thence into the regenerators through the reversing damper pipes B, where it is raised to a temperature of about 1,000 degs. Cent. (1,832 degs. Fahr.) It is then conducted to the vertical heating flues by means of the openings C, an enlarged view of these being shown in fig. 1619. The gas from the by-product plant returns to the ovens by the mains D, and by means of the branch pipes H and the gas channel E is conducted to the gas nozzles F, into each vertical flue where it ignites with the hot air entering by the passage C.

With the regenerators it is necessary to reverse the heating process every 30 minutes, as is usual with regenerative ovens, and for this purpose the heating flues are divided into two sections, so that combustion can take place in each half of the oven wall alternately. The products of combustion therefore pass up the vertical flues, say on the right-hand half, enter the horizontal flue G, and down the left-hand half, through the openings C into the regenerator to be heated, and from thence through B into the main flues U. The pipe B is fitted with two reversing dampers, which are all connected together, and the operation of reversal is carried out from one end of the battery.

Messrs. Koppers Coke Oven and By-Product Company have recently introduced a new process for the extraction of the by-products. Fig. 1620 shows a diagrammatic representation of the system employed. The hot gas from the ovens enters the preliminary cooler A, which is of the multitubular type, and after passing through the tubes emerges at the bottom and is led into the water coolers B, where the temperature is reduced to 25 degs. Cent. The gas is then drawn by an exhauster C by which it is delivered to the tar extractor D. After having been freed from the tar the gas is returned to the preliminary cooler A, where, in passing between the tubes, it becomes heated up and at the same time exerts a cooling effect on the hot gas. The heated gas is then conducted along the main F to the acid saturator E, in which the ammonia in the gas is extracted by direct contact with the acid, and is recovered in the form of sulphate. The saturator is of the totally enclosed type, and the salt is continuously removed therefrom by means of an injector. The salt is delivered on to a collecting table, from whence it is run off, together with the accompanying mother liquor, into a centrifugal dryer L in the usual way.

The gas passes out of the saturator by the main K, by which it is conducted back to the ovens and other points where required. In cases where benzol is required to be recovered from the gas, it is necessary for the gas to be cooled down after leaving the saturator, after which it is subjected to the usual scrubbing operation.

The products of condensation which are extracted in the cooling and tar eliminating operations, are drawn off from the several apparatus and are conveyed into a separating tank H, where the tar and ammoniacal liquor separate according to their specific gravities. The tar flows into the storage tank I, and the gas liquor into the storage tank J. The liquor is pumped to the ammonia still G, where the ammonia is driven off by means of steam and lime in the usual way. The vapours of distillation are conducted from the still, and are delivered into the main F, where they mix with the heated gas, and the whole then passes into the saturator.

Figs. 1621 and 1622 show two views of Koppers coke ovens and by-product plant, one at Flimby Colliery, the other at St. Helen's Colliery, while fig. 1623 shows the gas exhausters.

PLATE CXLIX.

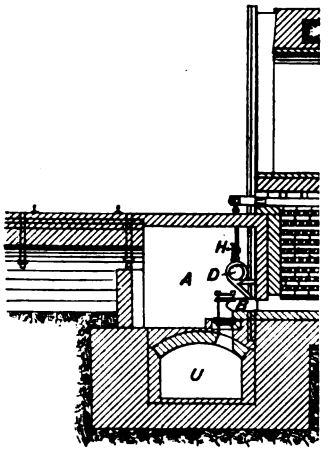

FIG. 1616.—L

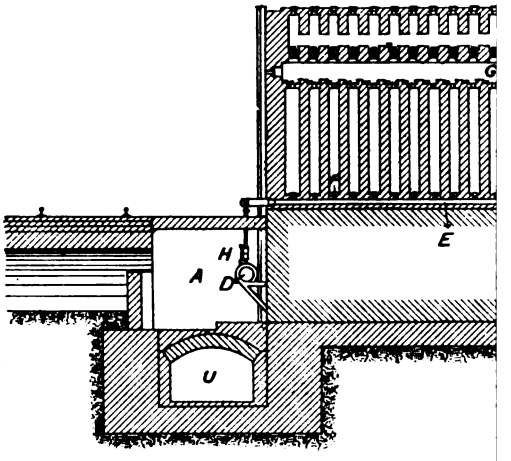

FIG. 1618.—LONGITUDINA

COPPERS' REGENERATOR COKE OVEN.

(SEPARATE REGENERATORS FOR EACH OVEN).

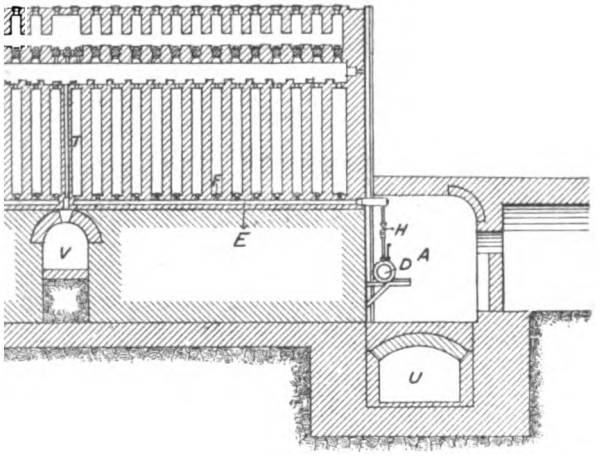

SECTION THROUGH HEATING FLUES.

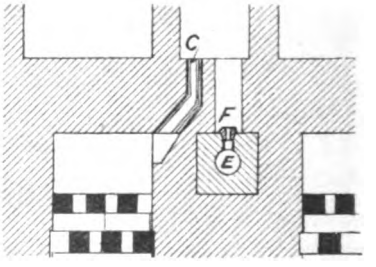

FIG. 1619.

CROSS SECTION THROUGH GAS NOZZLE.

Scale, 2½ feet to 1 inch.

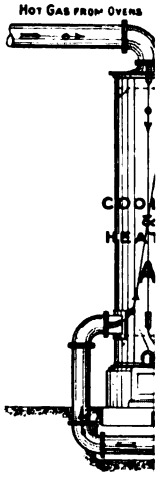
HOT GAS FROM OVENS

LIBRARY
OF THE
UNIVERSITY
OF

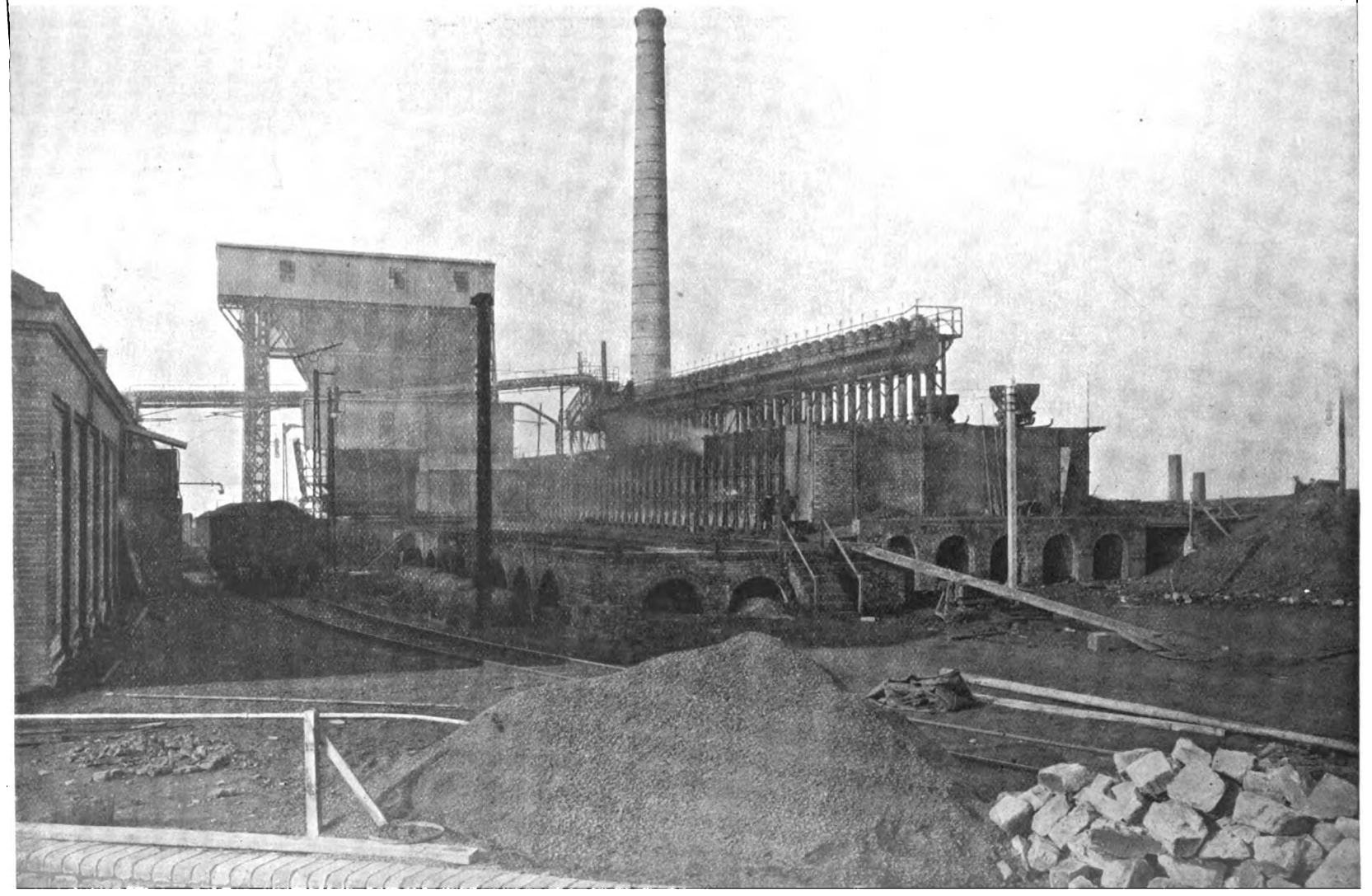

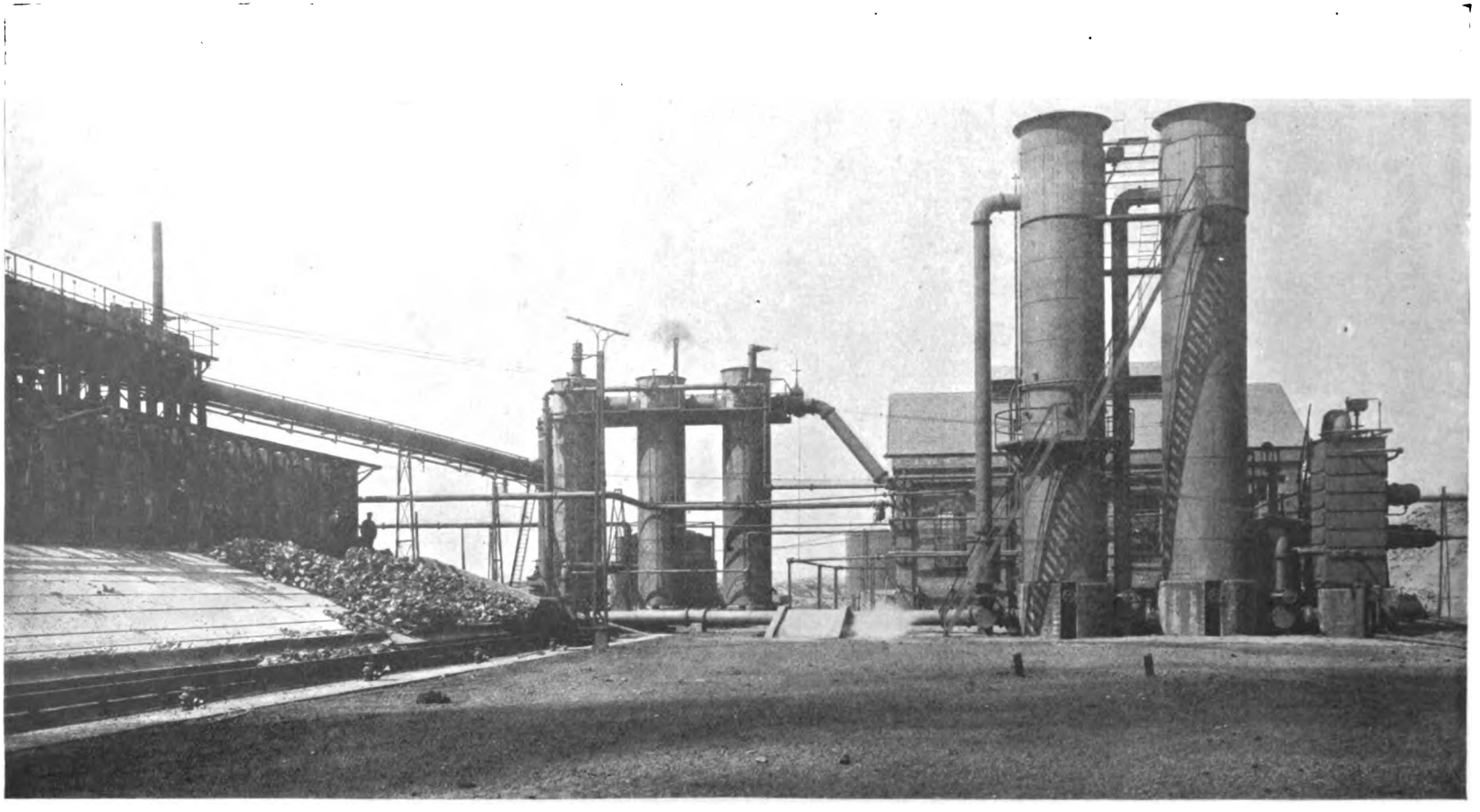

FIG. 1622.—BY-PRODUCT RECOVERY PLANT AT ST. HELEN'S COLLIERY.

The "Collin" vertical-flued oven has recently been introduced into this country by the Coal Distillation Company, in order to meet the demand for a regenerative oven, though both waste heat ovens as well as regenerative are built on the "Collin" principle.

Figs. 1624 to 1627 show the regenerative oven, which is about 33 ft. long by 7 ft. 3 in. high, and from 19 in. to 21 in. in mean width. The gas is drawn from the

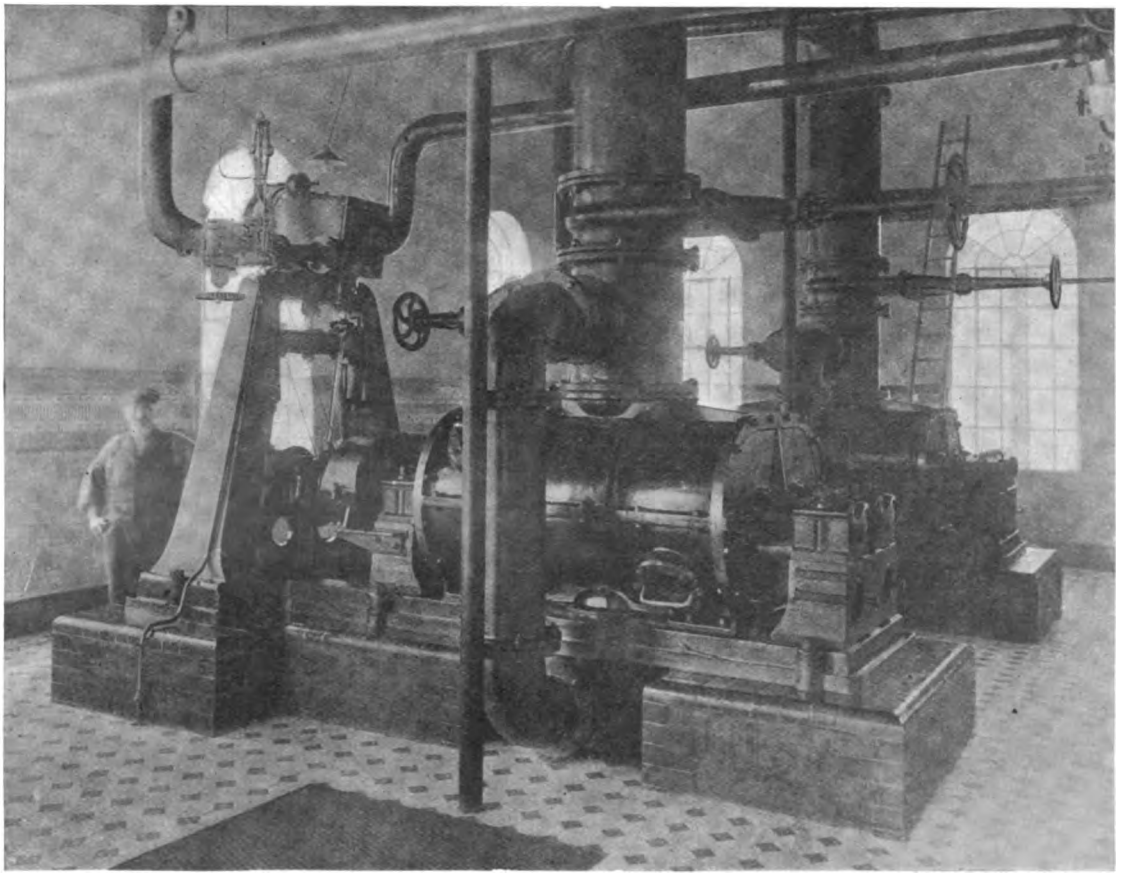

FIG. 1623.—GAS EXHAUSTER AT ST. HELEN'S COLLIERY.

oven chamber *a* through the opening *b* and the ascension pipe and main to the by-product plant, where it is freed from tar and ammonia, and is returned under pressure to the ovens through pipe lines *c*. From here it goes alternately through the burners *d* and d^1, which are at the bottom and top of the oven respectively, into the distributing flues *e* and e^1 at both ends of the oven.

The gas in these distributing flues is not mixed with air and is therefore unburnt combustion only taking place in the vertical flues k alternately at the bottom and at the top. This means of introducing the gas assures a very uniform distribution over the various flues, and therefore, a uniform heating of the oven, which is the same at the ends of the oven as in the middle. The air for combustion comes in one period from the regenerator f through the ports g into the oven sole flues h, from which for every vertical flue k a connection o without a nozzle is provided, which opens at the foot of these vertical flues immediately below the oven sole.

In the other period the air for combustion comes from the regenerator f^1 through the ports g^1 into the sole flue h^1, from which for every vertical flue k a connecting flue i is provided which leads the hot air to the upper part of the oven wall, where it meets the gas introduced at d^1, causing it to burn in a downward direction through flues k. The air is heated in the regenerators to about 1,000 degs. Cent. before it causes the combustion of the gases in the wall flues k. The flames travel through all these twenty-eight flues k at the same time and lead their products of combustion into the twenty-six flues i, from which they are conducted to the corresponding sole flue h^1 and into the regenerator f^1. On changing the direction of the draught, which is done by means of a lever at the end of the oven battery, the heating takes place simply in the opposite direction— that is, from top to bottom, but always through the same flues k. In this case the hot air ascends through the flues i and causes the combustion of the gas introduced at the top while the products of combustion leave through o and h into the regenerator f. The flues therefore are not alternately heated on one half of the oven by direct flames, and on the other half by waste heat. Further, the gas passages are very short, the uptake and the downcomer flues adjoining each other. There are no long passages above the heating flues through which the waste heat has to travel, and hence the draught is the same in all flues and the ends of the ovens are as well coked as the middle.

The gas supply is well distributed and the passage of the gases through the flues is compulsory and not left to chance. The cocks for regulating the quantity of gas to be admitted are easily accessible and there are no nozzles to be cleaned or changed.

The reversing of the direction of the gas and air is effected by simply moving one lever at the end of the battery which is connected to the two gas mains and the two regenerators. This can be done either by hand or automatically by a small motor actuated by clockwork.

A very important improvement has also been effected in doing away with the large volumes of brown smoke emitted from the ascension pipes of the ovens when the latter are being charged, and which smoke is a great nuisance especially in inhabited localities. For instance, in a battery of sixty ovens from fifty to sixty

are charged per twenty-four hours, and during at least ten minutes on each charge, or from eight and a-half to ten hours in the twenty-four, dense volumes of smoke come from the plant. In both the Collin and the Huessener ovens this is now avoided by building a small firebrick flue x (fig. 1624) in the covering brickwork of the ovens, which flue is kept at dull redness by the heat radiating from the top of the ovens and which is connected with a small chimney at the end of the battery. When an oven is being charged the smoke is led into this flue from the ascension pipes by means of a portable elbow as shown in the illustration, fig. 1624.

The Collin waste heat oven is exactly similar in construction except that there are no regenerators.

The Coal Distillation Company have also introduced a new system of recovering the by-products, a diagrammatic representation of which, taken from the patent specification, is shown in fig. 1628. In this system the crude gas from the ovens enters through pipe 1, the helical condenser 2, where it gives up the greater portion of its tar in a condition free from water, the gas then passes through the vertical water tube condensers 3 and 4, to the Pelouze tar extractor 5; the tar from this, as well as from the condenser 2, being collected in tank 10a. The tar and ammoniacal liquor from 3 and 4 pass to reservoir 10, from which the ammoniacal liquor by decantation passes to tank 11. The steam ejector or exhauster 6 draws the gas through condensers 2, 3, and 4, and the Pelouze 5, and forces it in a condition free from tar, into the ammonia still 7, and thence to the saturator 8, and its tower extension to the last condenser 9, from whence it leaves by the pipe 16.

The ammoniacal liquor collected in tank 11 is raised from this vessel by the pump 12, and forced through the condenser 9 and pipe 13 to the ammonia still 7. Here it is mixed with lime in the usual manner, and the ammonia is driven out of the water by the hot gases flowing through the still. These hot gases carry the ammonia into the saturator 8, pass through the acid in the latter and rise upward through the tower extension, which is lined with lead and filled with an acid-proof material, down which sulphuric acid flows. The ammonium sulphate which separates and collects at the bottom of the saturator is either fished or blown out by a steam ejector.

At the present moment there appears every likelihood of the ammonia being recovered direct from the coke oven gas without any condensation or cooling towers being required, or any noxious effluent being left to be dealt with. In fact, the Otto-Hilgenstock Coke Oven Company have already introduced a system which claims to give all the numerous advantages of a direct recovery. Briefly stated, in this system the gas is drawn direct from the ovens and through tar spray separators by means of exhausters, by which the whole of the tar is removed. The hot gas is

then passed direct into the saturator, and from thence back to the ovens, or to the coolers and scrubbers for the recovery of benzol.

There are many other types of horizontal ovens, which differ in constructional details, amongst these being Poetter's, Von Bauer's, Brunck's, and Otto-Hoffmann's, but the principle of the retort oven remains the same. More recently, a new by-product oven, which is vertical and circular in form, has been invented by Mr. Armstrong, for which was claimed all the advantages of the beehive oven, together with those of the by-product type, but which could be better constructed, and at much less cost, than the latter type.*

In order to reduce the working expenses in connection with the charging and discharging of coke ovens, several proposals have been put forward for the construction of inclined or vertical coke ovens. The former, so far as the author is aware, have not been adopted, but a vertical coke oven, the Appolt, was introduced about the year 1862 in Belgium, but did not meet with any conspicuous success. Since then a vertical oven was introduced by Mr. Armstrong, as mentioned above, but this also does not appear not to have made any progress.

The most recent development on these lines is the Elliott-Jones patent vertical by-product coke oven, particulars of which have been kindly supplied by Messrs. Dunford and Elliott, of Newcastle-upon-Tyne, and which bids fair to revolutionise coke oven construction.

A general arrangement of these ovens is shown in figs. 1629, 1630, and 1631, the latter being a cross-sectional elevation on an enlarged scale, while figs. 1633 to 1637 show further sectional views of the arrangement of heating flues.

As will be seen, the oven consists of a rectangular chamber, slightly larger at the bottom than at the top, to facilitate the discharge of the coke, the usual dimensions being 10 ft. by 20 in. at the bottom, 9 ft. 8 in. by 16 in. at the top, and 19 ft. in height, the charge for such an oven being 7 tons. These dimensions, however, are varied to suit the coal to be coked. The inner lining is of carefully selected fire-brick, and is surrounded by a number of horizontal flues, with an inlet for both gas and air at one end (*see* figs. 1635 and 1636), which, igniting close to the inlet, traverse along one side, around the opposite end, back along the other side and again turning at the front or inlet end, passes through an opening provided with a damper, into the waste heat flue 27 (fig. 1631), to the chimney. The air for combustion enters through the opening 18 into the air uptake 1, to the air heating flue 2 at the top, and from thence passes to the hot air downtake to each separate flue as required. The gas from distillation of the coal is drawn through the patent water jacketed gas outlet pipe 47, into the hydraulic main by exhausters, and after passing

* See *Colliery Guardian*, January 17, 1908.

through the by-product plant returns to the coke ovens by the gas main shown on the left, and by means of branch pipes provided with regulating cocks and gas nozzles, is conducted to each separate flue. The heating flues are entirely separated from each other, and are quite independent both as regards gas and air as well as the chimney draught. A spy glass is provided for each flue, and the control of the heat supply and regulation of the chimney draught is so perfect and simple that it cannot be described other than "ideal" in its operation.

The advantages of this arrangement cannot be over-estimated, as there can be no concentration of heat at any one point, but is evenly distributed and easily controlled to just the right temperature from bottom to top of the oven as required for the proper coking of the charge.

The coal is charged in at the top by means of a charging lurry holding the complete charge of coal, and the top door is merely lifted, the lurry moved into position, and the charge dropped in. At the experimental oven which the author inspected, the lurry was moved backwards and forwards by means of pinch bars under the wheels, but even under these adverse conditions the time occupied in the operation of charging was remarkable, as the following timing shows:—

Moving lurry into position and lifting top door	85 seconds.
Moving lurry forward to bring charge over top of oven.....	63 seconds.
Charging coal into oven	20 seconds.
Moving lurry back and lowering door into position, thus closing oven	80 seconds.

or a total of 248 seconds, or say, four minutes between commencing to charge and having the oven connected to the gas main. With electrically-operated machinery this operation could easily be carried out in about two minutes; and such rapidity of charging prevents the enormous volume of smoke which is now so prevalent during the charging of horizontal ovens, and which means a saving of valuable products in the gas which is now lost.

The coke is discharged from the oven simply by lowering, by means of an hydraulic ram, the bottom door, which, during the coking period, is held in position by clamp bars. The ram is mounted upon wheels running on rails directly underneath the oven, and, as soon as the door is lowered, a coke car pushes the ram with the door on one side, and receives the charge of coke upon it. The car is then run off to a sealed coke quenching chamber, after which it is sent to the wagon loading stage, where it is tipped by another hydraulic ram, as shown in fig. 1632, the coke passing over a screen into the wagon. The door, which meantime has received a coat of luting, is quickly brought back to the oven, raised up and clamped into position. As shown on the drawing the coke car and door rams are arranged to be moved by ropes from the drums worked by an engine 33 in the power house. In all probability, however, electrically-operated machines would be found preferable.

The ovens may be either of the waste heat or the regenerative type. In the latter, two regenerators 46, are placed side by side as shown, with a reversing damper 44 placed in the flues connecting them with the ovens. The arrows show the course taken by the waste gas from the ovens to the left-hand regenerator, which is reversed about every thirty minutes by moving the damper.

An important feature of this oven is the water-jacketed gas outlet pipe 47, which effectually prevents dissociation of the gas and the formation of the hard deposit usually found in the gas outlet pipe of horizontal ovens, and it requires absolutely no attention during the coking period. What little deposit is formed is quickly removed by a small crescent-shaped scraper operated by a rod projecting from the outside flange of the pipe when the coke is ready for discharging.

Briefly stated, the advantages this oven offers over the present horizontal type, are as follow:—

1st. The foundations required will only amount to one-third of the cost of those required for horizontal ovens.

2nd. The ground space occupied for equal capacity will be very much less.

3rd. The labour charges will be fully 50 per cent. less than the labour charges on horizontal ovens.

4th. The yield of by-products will be greater and of better quality.

5th. No machinery for compressing the charge of coal or ramming the coke on discharging is required, and

6th. From the particular method of construction there will be

(*a*). Longer life of ovens.

(*b*). Easy and perfect control of heating flues.

(*c*). Lessened cost of repairs.

(*d*). Increased output owing to saving in time when charging and discharging.

It is pleasing to note the experimental oven abundantly proved the above advantages from the great number of samples of coal tested in the oven; so much so, that a German firm had no hesitation in placing an order for a battery of sixty ovens, which are now under construction.

Fig. 1638 shows the Jenkins de Brouwer patent coke oven charging machine, which consists of a "D.B. patent coal projector" carried in a travelling frame, built up of steel channels, angles, and plates, and fitted with manganese steel travelling wheels, arranged to run on rails along the front of the coke ovens, as shown. The machine is driven by electric motors, the current for which is collected from overhead wires by means of suitable trolley poles. A hopper of suitable capacity is fixed on the machine, and an agitator is provided so that wet coal may be used without any "hanging up" in the hopper. A feeder would also be fitted to keep

FIG. 1624.

Section through Oven.

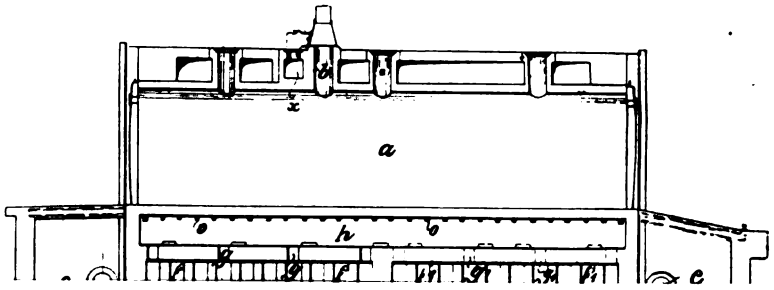

FIG. 1627.

Section g-h.

LIBRARY OF THE UNIVERSITY OF CALIFORNIA

PLATE CLIII.

Fig. 1633.

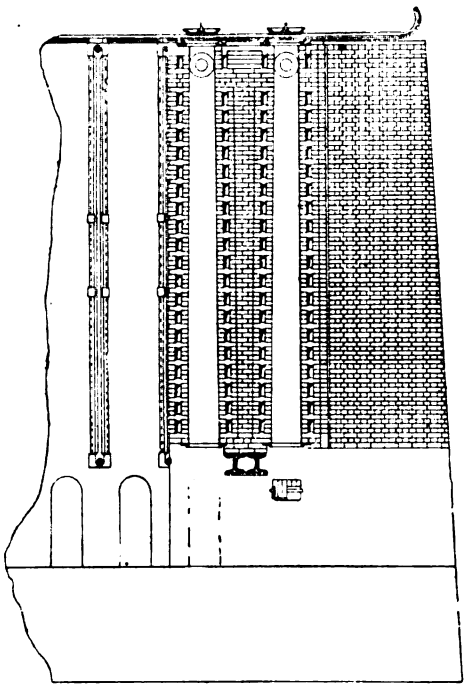

Front ... Sectional Elevation

Fig. 1634.

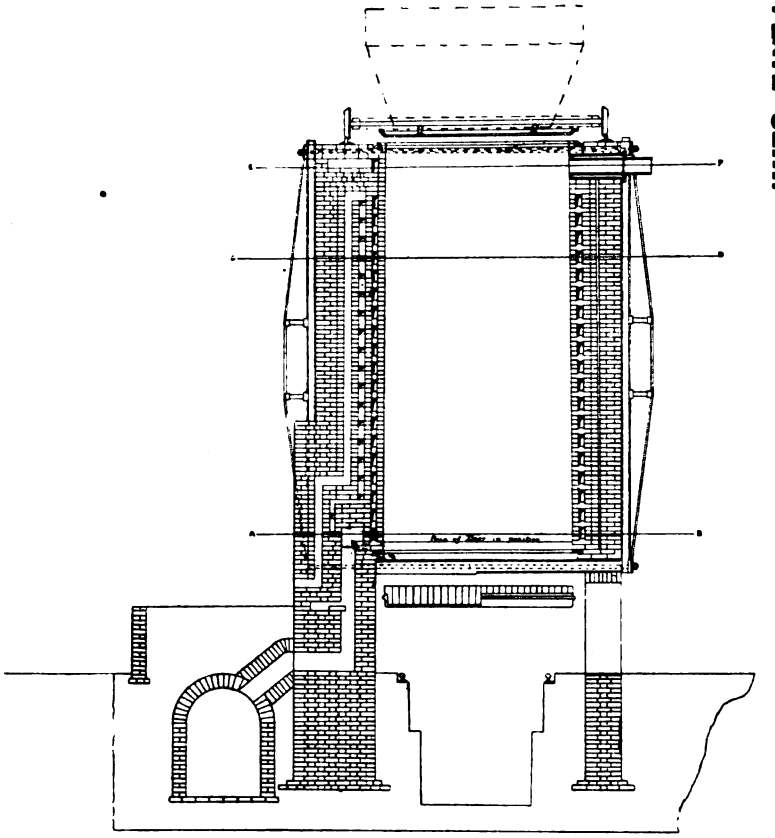

Transverse Section

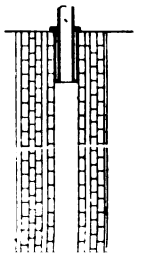

Fig. 1637.

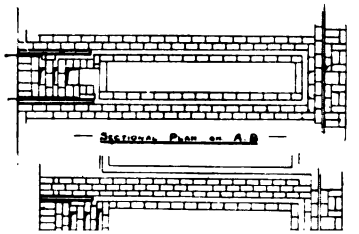

Sectional Plan on A B

Fig. 1635.

Fig. 1636.

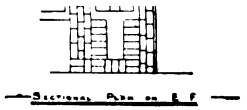

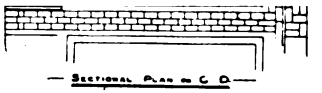

FIGS. 1633 TO 1637.—GENERAL ARRANGEMENT OF ELLIOTT-JONES PATENT VERTICAL 7-TON COKE OVEN.

FIG. 1638.

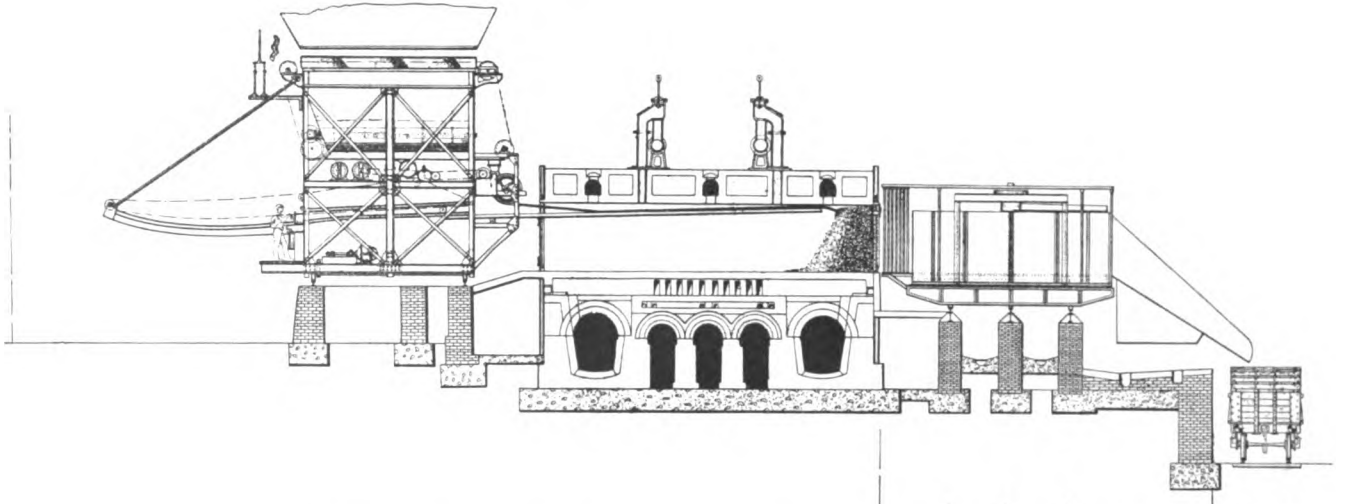

FIGS. 1638 & 1639.—JENKINS DE BROUWER PATENT COKE OVEN CHARGING MACHINE AND GOODALL'S PATENT COKE QUENCHING, SCREENING, AND LOADING MACHINE (W. J. JENKINS AND CO.)

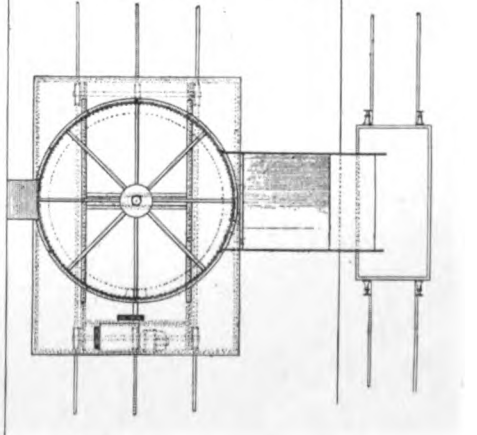

FIG. 1639.

the projector supplied at an even rate to enable good and level charges to be put into the ovens.

The " D.B. projector " consists of a frame carrying a large grooved drum and three smaller pulleys, which carry an endless rubber band having a raised path, which engages with the groove of the large drum. This groove is made of a size to suit the class of coal used. One of the small pulleys is driven from the motor by means of a belt, and thus drives the rubber band at a suitable speed. The coal from the hopper is fed into the projector tundish, from which it falls into the space between the belt and the face of the grooved pulley. A movable tray is arranged underneath the projector on to the face of which the coal is thrown. The projector runs at such a speed that the coal is thrown along the tray in a continuous stream, sufficient energy being imparted to the coal to ensure that it shall travel right along the tray and pile up to the required height in the oven. The oven may be filled right up to the crown if desired, or any required space may be left above the surface of the coal. As charging progresses the tray is drawn back towards the mouth of the oven, and the speed of the projector is at the same time suitably reduced. This is usually done with continuous-current motors, by means of a rheostat which regulates the speed of the projector motor, but for other types of motors, any other arrangement may be used. The tray is carried in guides on the machine frame, and is driven in and out of the oven by the projector motor by means of suitable gearing. The movement of the tray is thus kept in time with the progress of the charge, ensuring a level layer of coal. The machine is worked by one man who stands on a platform at the rear of the machine, all the levers and handles being placed conveniently for operating from the one position.

With this machine it is not necessary to have the oven door fully open during the charging operation, as the tray and charge can be introduced into the oven through a small opening in the upper part of the door similar to the levelling doors used with lurry charging. The time required for charging is greatly reduced, also the working costs, only one man being required for charging the whole of the ovens in addition to the men required for attending to the oven doors, valves, &c. The machine, as shown in the illustration, would be suitable for dealing with ovens 6 ft deep by 33 ft. long, with charges of 7 to 8 tons.

In connection with the charging machine is shown Goodall's patent coke quenching, screening and loading machine, of which fig. 1639 is a plan. This machine consists of a strong travelling frame running on rails on the discharging side of the coke bench and carrying a revolving table. The machine is driven by means of a motor of about 20-b.h.p., fitted with controller and resistances, the current being collected from the overhead wires carried along the front of the bench by means of trolley poles. A clutch is arranged so that the machine may be

traversed or the table revolved by the one motor. The revolving table is 20 ft. diameter, fitted with cast iron perforated grid plates, the sides being of steel plate with cast iron lining. A circular rack is arranged round the edge of the table, by means of which it is revolved. A quenching arrangement is provided at the front of the machine as shown on the drawing. The coke on being pushed out passes through the quencher on to the revolving table, where it is carried round to the screen, the surplus water draining off through the perforated grids into sumps

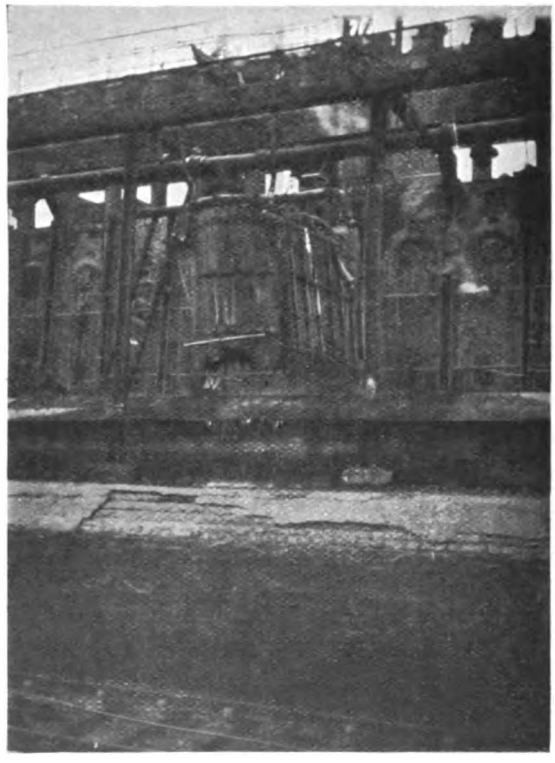

FIG. 1640.—COCHRANE AND PEEL'S PATENT SHIELD.

provided between the rails. A hinged plate or plough is arranged to deflect the coke off the table over a screen into the wagons, and a shoot or hopper is fitted under the screen for the breeze which is separated out. The motor and gearing is enclosed in a corrugated iron cabin, which is fitted with windows and doors for the convenience of the operator. When necessary, according to the class of coal used, a revolving arm is provided to ensure the coke falling on to the table in the proper manner. With most coals this is not required. This machine is capable of

dealing with the coke from a 7 or 8 ton charge. The advantage is that only two men per shift would be required for quenching and loading the coke from the whole of a battery of ovens.

Figs. 1640 and 1641 show two views of Cochrane and Peel's patent shield attached to the end of quencher for preventing the breakage of coke as it is discharged from the oven. The views also show the overhead water pipe and hose pipe connections. The quencher is supported by overhead runners, and the shield, which consists of a steel plate, is attached to the front large cooler pipe

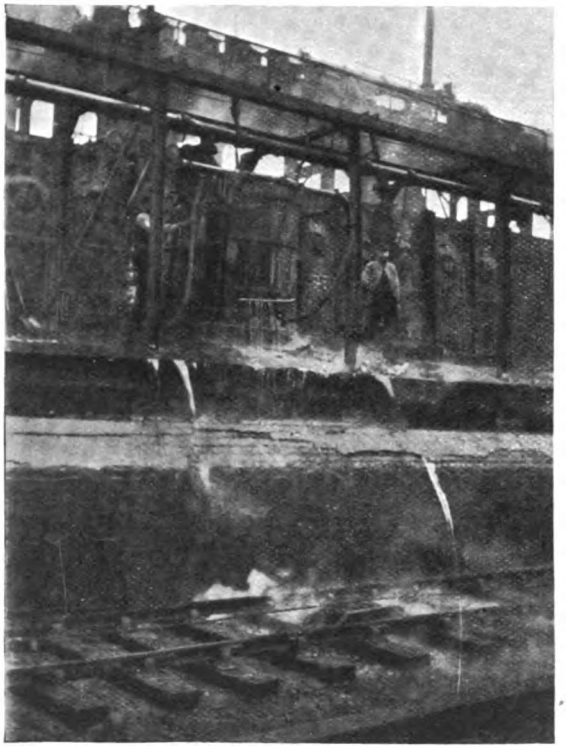

FIG. 1641.—COCHRANE AND PEEL'S PATENT SHIELD.

which is directly suspended from the front runners. The coke is discharged into a coke wagon running on the rails in front of the ovens, the rails, rope, and rollers being shown. Without the shield, the coke used to fall from the top of the bank of coke into the wagon, with such a velocity that it was broken. With the shield the coke as it breaks off is guided by the shield to the floor plate, where it slides off into the sloping bottom of the coke wagon. Fig. 1641 shows the man disconnecting the hose pipe, the photograph being taken immediately after the oven was discharged.

INDEX TO VOLS. I. and II.

Abbott's lubricator, 508
Aberaman Colliery heapstead, 336
Accumulators, 674
Acceleration, 151, 520
Adamson's joint, 647
Adams' haulage brake, 516
Aerial ropeways, 561
Air-charging pumps, 609, 620
Alley and Maclellan's air-compressor, 697
Allen (W. H.), Son and Co.'s high-speed engine, 679
Alternators, 662
American Diamond rock drill, 1
Ampères, 652
Anthracite, preparation of, 346
Anzin Colliery winding ropes, 131
Appolt coke oven, 764
Armstrong coke oven, 764
Avery's weighing machines, 428
Axle bearings, 502
Axles, diameter of, 505

Baird (Archibald) and Sons' signals, 306
Balance-weight inclines, 516
Bashes, 457
Barclay (Andrew), Sons and Co.: winding engines, 164, 178, 187; cut-off gear, 175; Wallace's winding arrangement, 217; pumps, 593, 619; haulage engines, 553, 558
Baum washer, 479
Bar belts, 339
Bagging screens, 313
Bauer coke oven, 764
Bailey (W. H.) and Co.'s: sinking pump, 51; air compressor, 690
Batteries, storage, 674
Babcock and Wilcox boilers, 640
Balance bobs, 603
Balance ropes, 207
Beaumont drill, 1
Belts, arrangement of, 86; power for driving, 423; troughed, 421; canvas, 419; plate, 408; bar, 408
Bever, Dorling and Co.: haulage engines, 536; pump engine, 594
Beehive coke ovens, 699
Bearings, roller, 506
Bearings, 502
Bearings, crank, 168
Beien's cage keps, 295
Bentley's rail joints, 491
Beaumont's vibromotor screen, 389
Benzol plant, 720
Billy boxes, 357
Billy fairplay, 310, 335
Blackett cage, 279; washer, 452; conveyor, 762
Boiler, 634; arrangement of, 81; number, 81; flues, 647, 650; plates, 644; feed-water, 643
Board of Trade electrical unit, 652
Boreholes, enlarging, 22
Boring, 1; hand-power, 12; rope, 13; down-over, 17; up-over, 22; against old workings, 26; under water, 28; shaft, 36, 75
Boyle's law, 158
Bottoms, pit, 300
Breakage of coal, 412, 516
Brakes, 178, 185, 190, 193, 211, 516, 541
Breaking strain, 132, 136, 442
Broombill Colliery headgear, 108; pit bottom, 301; heapstead, 323; pumps, 585
Breaker, anthracite, 351
Brunck coke oven, 764
Brick coffering, 68
Bricks for coke ovens, 706
British Thomson-Houston Company's turbine, 683
British Westinghouse Company's dynamo, 679
Bridge (David) and Co.: friction clutch, 558; haulage pulley, 548
Bruce Peebles and Co.'s winding system, 243; dynamo, 659
Burnett's washer, 453
Burnside drill, 26
Bunkers, small coal, 467
Bulls, 516
Bumping trays, 473
Bucket pumps, 55, 581
Buckets for ropeways, 571
Buntons, 98, 300
Buxton and Thornley's valve gear, 205
By-product recovery plant, 719, 758, 763
By-product coke ovens, 713
By-passes, 547

Cages, arrangement, 80; clearance, 88; number of decks, 89, 150; decking, 89, 299; design, 91; construction, 273; auxiliary cages, 304; drop cages, 305
Cages, water, 573
Cage catches, 278
Cage chains, 289
Cage-guide framing, 300
Campbell, Binnie and Co.: screening plants, 339, 352, 395, 408; tub stopper, 364, 436; tippler, 371; washeries, 461, 464; disintegrator, 485; ratchet pawl, 549
Carr's disintegrator, 485
Caps, rope, 279, 284
Catches, safety, 281
Cambois Colliery heapstead, 317
Cabins, 313
Cables, electric, 670
Cadzow pulley, 549
Case-hardening, 183
Centrifugal pumps, 624
Chisels for boring, 22
Chains, bridle, 289; for creepers, 363; for plate belts, 412; couplings, 516, 549
Chambers screen, 385
Charging coke ovens, 708, 725, 732, 747, 766
Chimneys, 647
Classification, 457
Clutches, friction, 364, 426, 526, 536, 558
Classification after washing, 479
Clarke, Chapman and Co.: haulage gear, 526
Clack valves, 581
Clearance, 88
Clamps for guides, 95, 96
Clips, haulage, 549
Cochrane and Peel's patent shield, 769
Coppée washery, 468
Cornish pumps, 55, 598
Cornish valves, 167, 175
Cook (Jos.), Sons and Co.: sinking kibble, 34; headgear, 277; cleaning belt, 313; tipplers, 368, 376; jigging screen, 395; disintegrator, 485; water cage, 573; coke oven conveyor, 708
Controllers, wagon (*see* Tub stoppers)
Couplings, chain, 516, 530
Corner plates, 498
Counter-balance ropes, 155
Corliss valve gear, 143, 187, 199, 210, 536
Conical drums, 156, 193
Controlling gear, 232, 235
Condensing engines, 163
Coking coal, screening, 313; washing, 470; compression, 716, 722, 747
Coulson (M.) and Co.: heapstead, 317; coal distributor, 382; Burnett's washer, 453
Coxe's screen, 387
Collin coke oven, 761
Coke rams, 732, 747, 766
Coppée coke oven, 726
Compression of coal, 716, 722, 747
Coking, early methods of, 699
Coke ovens, 699; beehive, 699; charging, 708, 725, 732, 747, 766; by-product ovens, 713
Coke quencher, 732, 767
Compressed air, 683
Conductors, electrical, 670
Cost of generating power, 653
Coke oven gas, 633
Condensers, surface, 609
Compressed air locomotives, 539
Conveyors, 313; screening, 398; coke oven, 708, 732
Coffering, 68
Craven double-grooved pulley, 208
Cribs, 65
Crank shafts, 168, 221
Craig's washer, 470
Crushing, 470
Creepers, 327, 352, 363
Creeper chains, horse power for, 364
Crossings, 491
Crawford rocking cradle, 516
Cramps for straightening tub bodies, 501
Crab engines, 61
Curves, rail, 491
Cut-off gear, 175, 185, 193, 205
Curves, 535, 545
Curves, inclined sheath for, 533
Curtis turbine, 683
Cwm Neol Colliery heapstead, 336
Cylinders, winding engine, 143, 161, 219

Darby coke car, 732
Daw air-compressor, 692
Davidson cylinder, 53
Decking, 89, 297, 299, 302
Denaby and Cadeby Main Collieries: pumps, 51; pit bottom, 303
Deep shafts, winding in, 219
Denaby sinking pump, 51
Deane sinking pump, 49
Débris, removal of, 30, 83, 424
Débris tubs, 501
Detaching hooks, 106, 254, 262
"Devil" disintegrator, 485
De Brouwer charging machine, 766
Dearden pulley, 549
Diamond drill, 1
Dixon and Corbitt and R. S. Newall and Co.'s ropes, 133
Disintegrators, 485
Distil-Susky screen, 387
Direct-current motors, 664
Direct-current, 653
Direct-acting pumps, 607
Differential valve-gear, 601
Doors, folding, for shaft sinking, 30, 33, 34, 38
Drainage (*see also* Pumping), 572
Drainage screens, 464, 477; bunkers, 475, 477; conveyor, 480
Drills, diamond, 1; hand, 12
Dross pits, 462

Drums, winding, 130, 155, 170, 183, 190, 193, 203, 222; haulage, 539
Drying washed coal, 475
Drawbars, 498
Draught, 647
Durnford and Wormald's screen, 391
Duplex pumps, 615
Dynamos, 226, 653; action of, 659

East Hetton Colliery tipplers, 375
Eadie (Jas.) and Sons, pipe joints, 57
Eccentrics for driving screens, 407
Economisers, 643
Electric pumps for sinking, 58
Elliott washer, 447
Electricity for driving screening plant, 427
Electricity, winding by, 224, 632
Elevators, 359
Electric haulage gear, 526, 542
Electric coke oven loading tub, 708
Electrical terms, 651
Electricity, supply of, 632
Electric pumps, 623
Electric locomotives, 559
Electrical safety winding gear, 256
Electrical Company's winding system, 228, 235
Elliott-Jones coke oven, 764
Elliot (Geo.) and Co.'s ropes, 134
Engines for lowering pumps, 61
Engines, haulage, 525, 535, 541, 553
Engines, turbine, 683
Engines, high-speed, 679
Engines, gas, 633
Engines, pumping, 61, 577
Engines, winding—
  Temporary, for shaft sinking, 30, 62
  Movable engine, 139
  Size of cylinders, 143
  Dimensions of engine, 145
  Steam consumption, 158
  Steam pressure, 159
  Compound engines, 161, 193
  Reducing valves, 162
  Condensing, 163
  Valve gear, 164, 199, 205, 222
  Hylton winding engines, 164
  Crank shafts, 168
  Reversing gear, 173, 175, 186, 199
  Cut-off gear, 175, 185, 193, 205
  Exhaust valves, 175
  Governors, 177, 199, 206
  Brakes, 178, 185, 193
  Drums, 130, 155, 170, 183, 190, 193, 203, 222
  Corliss valve gear, 187, 199
  Whitmore brake gear, 193
  Thornley's valve gear, 205
  Koepe system, 207
  Whiting hoist, 210
  Morgans' traversing engine, 213
  Design of engine, 219
  Cylinders, 219
Engines, winding—(*cont.*)
  Bolts and studs, 220
  Pistons and rods, 220
  Connecting rods, 220
  Crosshead pins, 220
  Crank pins, 221
  Crank shafts, 221
  Guide bars, 222
  Drums, 222
  Electric winding, 224
  Starting switches, 231
  Controlling gear, 232
  Shunt regulation, 236
  Ilgner flywheel system, 239
  Westinghouse system, 253
  Overwinding, 254
Endless rope haulage, 546
Endless chain haulage, 545
Erith underfeed stoker, 639
Evans (Joseph) and Sons: sinking pumps, 53; pumps, 615, 624
Evans and Dodd's axle greaser, 508
Everett's tippler, 375
Excelsior screen, 401
Expansion joints, 626
Expansion valves, 544

Factor of safety, 118, 137, 151, 443
Feed water, 85
Fine coal, washing, 473
Fine coal recoverer, 464
Flat sheets, 519
"Flats," 488
Fletcher (Geo.) and Co.'s screen, 385
Flues, boiler, 647, 650; coke oven, 703, 715, 716
Flywheel winding system, 239
Foundations for pumping engines, 65
Fochri Colliery headstead, 334
Forced draught, 639
Forster's patent pipes, 627
Fraser and Chalmer's drills, 1; winding engines, 193, 210; pump, 615; air compressor, 692
Freezing process, 75
Friction in haulage, 502, 509, 520
Frictional resistance in winding, 211
Frictional drive for tipplers, 368
Friction clutches (*see* Clutches)
Friction, coefficient of, 359
Frequency, 669
Friction in pumps, 627
Friction feed, 9
Futers' safety winding gear, 254

Galloway folding doors, 30; scaffold, 34; water barrel, 46; cages, 281
Gantries, 439
Gates, shaft, 119
Gas, coke oven, 633, 713
Gas engines, 633

Gebhardt and Koenig system of sinking, 75
Generators, driving, 679
Generation of power, 632
Glover (W. T.) and Co.'s cables, 670
Governors, 177, 199, 205
Goodall's coke quencher, 767
Gravity, specific, of minerals, 455
Gradients, 301, 359, 510
Grant, Ritchie and Co.'s cut-off gear, 205
Grand Hornu winding engines, 232
Grel cut-off valve, 51
Grange Iron Company's haulage engine, 539
Granaries, 494
Greasers, axle, 506
Guide ropes in sinking, 37
Guide pulleps, 217
Guide shoes, 92, 103
Guide framing, 300
Guinotte and Briart screen bars, 383
Guides, 92, 98
Gyration in headgears, 116
Gyratory screens, 387

Hand-power drills, 12
Hand haulage, 488
Hangers, cage, 274
Haniel und Lueg's cage keps, 295, 297
Hadfield's Steel Foundry Co.: self-lubricating wheel, 506; axle-greaser, 506; tub stoppers, 297, 516; rope sheaves, 533; rope rollers, 533; haulage clip, 549
Harness, 494
Harpen winding engines, 229
Hanley's cage guardian, 283
Hawksley Wild tubes, 635, 647
Hastie pump, 621
Hathorn, Davey and Co.: pumps, 577, 598; differential valve gear, 601
Hardy Patent Pick Company: sinking frame, 36; vibromotor screen, 389; Elliott washer, 447; "Devil" disintegrator, 485; self-lubricating axle, 505; haulage clips 549
Haulage, 487; systems of, 487; auxiliary, 487; hand, 488; horse, 492; friction in, 502; self-acting, 509; main-and-tail, 519, 527; mechanical, 519; main, 527; drums, 539; endless chain, 545; endless rope, 546
Haulage engines, 525, 553; dimensions of, 544
Haulage gear, electric, 526
Haulage pulleys, endless rope, 547
Haulage ropes, boxing, 535
Head, Wrightson and Co: Marcus conveyor, 399; Kochs' belt, 416; shoot, 419
Heenan and Froude: tipplers, 371, 375; belt, 412; haulage pulley, 549
Henri washer, 482
Heywood and Bridge's friction clutch, 558
Headgears (*see also* Shafts), 104; for shaft-sinking, 30; pulleys, 123
Heapsteads, old design of, 309; arrangement of, 80, 310; construction of, 317, 439; position of, 359
Hooks, detaching, 37, 106, 254, 262
Horden sinking, 31, 48
Hollings stop, 516
Horse haulage, 492
Hoppers storage, 467
Hoods for tipplers, 379
Hoists for empty tubs, 319
House coal, screening, 315
Holmes-Page switch, 674
Holmes-Clayton motor, 667
Holmes scrubbers, 748
Horse-power, 651
Humboldt Engineering Co.: washers, 457, 467; draining hoppers, 477; screens, 385, 387, 391
Huessener coke oven, 736
Hudson's safety cage, 281; water cage, 573
Hurd coal-cutters, 759
Hylton colliery pulleys, 123; cage keps, 294 winding engines, 164
Hydraulic washer, 482
Hydraulic transmission of power, 631
Hydraulic feed in drills, 7
Hydraulic keps, 295
Hydraulic decking arrangement, 303

Ilgner flywheel system, 239
Interlocking Channel Bar Company's system of tubbing, 72
Inclines (*see also* Gradients), 509; rails for, 512
Incline brake wheels, 515
Indicators, 306, 539
Ingersoll-Sergeant air-compressor, 695
Iron *v.* wood, 501

Jeffrey Manufacturing Company: electric locomotive, 559; coke oven loader, 708
Jenkins charging machine, 766
Jibs, screen, 318, 331
Jigs (*see* Bashes), 457, 515
Jigging screens, 323, 328, 352, 391
Joints, expansion, 626
Joints in headgear, 109
Joints, pipe, 57

Karlick's screen, 387
Keps, 293
Kind-Chaudron sinking system, 47, 75
Kibbles, sinking, 34; winding, 145
King's detaching hook, 265
"Kick-ups," 365
Kilowatt, 652
Kochs' patent belt, 416
Kochs (W. E.) and Co.: shaft pulleys, 123; winding engines, 206; cage keps, 295
Koepe system, 206, 244, 247, 291, 549
Koppers coke oven, 754
Koppers by-product recovery process, 758
Koster air compressor, 690
Koker stoker, 637, 643

Kreiss screen, 398, 402
Krafft valve gear, 207

Launder boxes, 463
Lang's lay ropes, 133
Landsale collieries, heapsteads at, 310
Lancashire boilers, 635
Latch and Batchelor's guide ropes, 96; lock-coil ropes, 134; flattened-strand ropes, 137
Leycett Colliery heapstead, 320
Lengtheners, rope, 542
Linings, shaft, 67
Lighting screening sheds, 424
Limbers, 494
Llanbradach Colliery sinking, 47; winding ropes, 134, 293; winding engines, 162; cages, 281
Lowering apparatus for belts, 415
Lowering device for screens, 404
Longbotham (R. H.) and Co.: haulage engines, 525, 526
Load, working, of winding ropes, 139
Load on headgear, 114
Loading cages, 299
Lock-coil ropes, 134
Loading wagons, 323
Locomotives, 559
Lothian Coal Company's pits, shaft pulleys at, 128
Lubricators, 506
Lubrication of bearings, 505
Lyons washer, 470

McBean and Eaton's tub stopper, 297
Mackey-Seymour coke oven, 753
Mather and Platt rope boring machines, 13, 16
Main-and-tail haulage, 519, 527, 535
Markham and Co: lattice bar headgear, 110; winding engines, 183, 235; trip gear, 185
Marcus conveyor, 398
Mainsforth pumps, 577, 598
Meldrum Bros.' stoker, 637, 643
Metallurgical coke, 713
Miller and Yates' tub stopper, 436
Morpeth sinking, 48
Morgans' traversing engine, 213
Motors, electric, 229, 653, 664
Mulholland, Maugham and Co.: headgear, 111, 123; shaft pulleys, 123; screen, 411

Newbattle Colliery sinking, 34, 38; shaft gates, 120; winding ropes, 288; pit bottom, 302; creeper, 362
Needles, breaking, 404
New Conveyor Co.'s screening plant, 356
Nut coals, washing, 458

Oddie-Barclay pump, 619
Offices, arrangement of, 82; construction of, 776
Ohm's law, 653
Ormerod's detaching hook, 262
Otto-Hoffmann coke oven, 764
Otto-Hilgenstock coke oven, 728
Otto-Hilgenstock by-product recovery process, 763
Overwinding, 254
Overhead ropeways, 561

Pedestals, 502
Pearson's patent system, 639
Pearl recoverer, 464
Pélouze-Audouin tar extractor, 740, 748
Piston rods, 169
Pipe joints, 57
Pits, position of, 80
Picking belts, 318, 331, 335, 355
Pipes, thickness of, 626; capacity of, 628; for compressed air transmission, 698
Plates, boiler, 644
Porion evaporating oven, 753
Power required for winding, 140; driving screens, 404; belts, 423; haulage, 502, 509, 521; pumping, 629
Power plant, arrangement of, 82
Power factor, 663
Power, generation and transmission of, 632
Poetter coke oven, 764
Polmaise Colliery heapstead, 352; washery, 464
Pressure, steam, 158, 651
Producer gas, 633
Pulsometer pump, 51
Pulsator, 746
Pumps, sludge, 20; sinking, 45, 48, 573; permanent, 574; bucket, 53, 581; forcing, 593; direct-acting, 607; boiler-feed, 612; duplex, 615; air-charging, 609, 620; electric, 623; centrifugal, 624; ram, 55, 591, 630
Pumping, 572; in shafts, 47; speed of, 623; by ropes, 630
Pulleys, design of, 123; weight of, 124; changing, 128, 247; Koepe, 206, 244, 247, 549; Craven, 208; Whiting, 210; main haulage, 536, 547; for self-acting haulage, 509
"Putting," 488

Qualter, Hall and Co.'s washer, 452
Quencher, coke, 732, 767
Quicksand, sinking through, 72

Railways, surface, 81
Rails for inclines, 512
Rail joints, 491
Rail guides, 98
Rams, coke, 732, 747, 766
Ram pumps, 591, 630
Ramps, engine plane, 553

Reddaway's cleaning belts, 419
Refuse, disposal of, 83
Reversing gear, 173, 175, 186, 199, 257
Re-washing, 470, 479
Reavell air-compressor, 697
Reid, Ferens and Co.'s chimneys, 650
Reservoirs, 572
Rheostats, 665
Rigg's tippler, 367, 376; screen, 383
Riedler pump, 615; air-compressor, 692
Rickaby packing rings, 164, 170
Rider for sinking, 37
Robinson washer, 457
Rope boring, 13
Roofing for screening sheds, 426
Rollers for conveyor belts, 423; rope, 530
Rolling stock, 82
Robey and Co.'s winding engines, 199, 203
Ropes, haulage, 515
Ropes, pumping by, 630
Ropes, winding—
  Diameter of, 130
  Flat, 130, 207
  Construction of, 131
  Standardisation, 131
  Breaking strains, 132, 136
  Lang's lay ropes, 94, 133
  Lock-coil ropes, 184
  Flattened strand ropes, 137
  Factor of safety, 137
  Working load of, 139
  Maximum strain in, 151
  Taper ropes, 219
  Caps, 279, 284
  Securing to drum, 292
  Shortening, 293
Rowbotham's self-lubricating wheel, 506
Roads, laying, 530
Rotative engines, 601, 607
Ropeways, 562

Sandycroft Foundry Co.'s sinking pump, 58
Saturator, 751
Salter's tub-axle greaser, 506
Scaife washer, 452
Scaffolds, 34
Screws, adjusting, 292
Screens: fixed-bar screens, 309, 335; arrangement of, 310; shaking screens, 316; bar screens, 382; the perfect screen, 384; perforated channel-bar screens, 385; gyratory screens, 387; conveyor screens, 398; power required, 404; driving screens, 407
Scrubbers, 473
Screening motion, 384
Screening plant, choice of, 310; various types of, 317; driving, 426
Seaham Colliery, arrangement of shaft, 98
Settling ponds, 463, 480
Self-lubricating wheels, 505
Self-acting haulage, 509
Semet-Solvay coke oven, 729
Sherwood Colliery sinking, 36
Shoot, telescopic, 419
Sheppard and Sons' screening plant, 349; "Victor" haulage engine, 525
Shackles, 291; chain, 519
Shoes, guide, 92, 103
Shunt regulation, 236
Sheaves (*see also* Pulleys), 533
Shafts (*see also* Sinking), 87; shape of, 29; size of, 87; circular, 88; guides, 92; headgears, 104; pulley frames, 114, 123; gates, 119; pit bottoms, 300
Siemens und Halske's winding engine, 244
Silvester's screening plant, 320; tippler, 368
Signals, 306
Sinking, 29; kibbles, 34; walling shafts in, 34; scaffolds, 35; rider, 373; water in, 42: pumps, 48, 573; cribs, 65; through quicksand, 72; up-over system, 78
Simon-Carves washery, 480; coke oven, 700, 716
Sidings, 488
Silverwood Colliery washery, 480
Sizes of anthracite, 349
Sizes of coal, 314
Siphons, 630
Simplex coke oven, 743
"Skeating," 535
Slide-valves, balancing, 183
Sludge apparatus, 477
Small coal belt, 357
Sockets (*see* Caps)
Soar's coal-lowering apparatus, 415
Speed of winding, 151; of pumping, 623; of motors, 669
Sprinklers, 473
Springs, cage, 284
Spur wheel gearing, 624
Spears, pump, 577, 585, 598
Stanchions, steel, 440
Staple shafts, 78, 306
Stresses on steel structures, 441; in headgears, 106, 111, 116; on winding ropes, 146, 151
Stoppers, tub, 297, 435, 516; creeper, 364
Steelyards, automatic, 429
Strain on winding ropes, 146, 151
Strength of chains, 290
Steel *v.* wood, 104
Steel, expansion of, 103
Steel headgears, 110
Steel guides, 99
Stacking grounds, 82
Storage hoppers, 313, 358, 486
Stables, underground, 493
Steam winding, advantages of, 225
Steam pressure, 159
Steam consumption of winding engines, 158
Steam coal, screening, 315
Stirling water-tube boilers, 643
Stokers, mechanical, 637
Steam boilers, 635

Suction gas producers, 633
Surface plant, 80
Switches, rail, 491
Switches, starting, 231, 665
Switchboards, 674

Tanks, sinking, 47
Tate gravity tippler, 375
Tar extractor, 740, 748
Taylor's saturator, 751
Teesside Bridge and Engineering Co.'s headgear, 113
Tension gear, endless rope, 554
Teague's expansion valve, 545
Tingley Colliery headgear, 113
Tipplers: arrangement of, 80; power-driven, 327; position of, 339; design of, 356; self-acting, 362; end, 365; hand, 365; power required, 365; Rigg's, 367; belt-driven, 371; friction-driven, 368; gravity, 375; automatic, 376; time of revolution, 379
Tippling, rate of, 382
Thickness of tubbing, 67
Thornley's valve gear, 205
Three-phase winding engines, 229; generators, 663; motors, 667
Thorncliffe pulley, 549
Tiremande mine, winding gear at, 247
Tomson's decking arrangement, 304
Travelling belts, 382
Transformers, 669
Transmission of power, 632
Tub stoppers, 146, 435, 516
Tubes, boring, 13, 26
Tubbing, 67
Tubs, changing, 89, 150, 299; size of, 87, 495; design of, 496; *débris*, 501; water, 501
Turns, 491
Turbines, steam, 683
Turbine pumps, 625

Underfeed stokers, 639
Units, electrical, 652
Up-over system of sinking, 78
Uskside Engineering Co.'s crab engine, 61

Valves in drills, 51, 53; in winding engines, 143, 164, 167, 177, 180, 185, 187, 199, 205, 207, 211, 222; reducing, 162; on haulage engines, 559; throttle, 559; clack, 581; pump, 591, 594, 598, 601, 609, 616
Velocity of water, 629, 455
Ventilating fans, position of, 82
Vertical-flued coke ovens, 717
Vertical coke ovens, 764
Vibration of jigging screen, 393
Vibromotor screen, 389
Victor haulage engine, 525
Voltage, 651

Washeries, arrangement of, 461
Washing, early methods of, 446; principles of, 455; cost of, 468; classification after, 479
Washer, felspar, 458; trough, 446
Water, boring under, 28; in sinking shafts, 42; velocity of, 629; flow of, 628
Walker's patent sinking frame, 36, 42; patent rider, 37
Water supply, 85
Water barrels, 46
Water tubs, 501
Walker's detaching hook, 271
Walker differential pulley, 210, 549
Wallace winding arrangement, 217
Water, hot, locomotives, 561
Weighbridges, 428; steelyard, 432; combined, 434
Weighing machines, dial, 429
Weighting guides, 95
West's detaching hook, 269
West Riding and Silkstone Collieries, decking arrangement, 299
Westinghouse electrical winding system, 253
Weldless Chain Company's chains, 545
Wheels, position of, 498; size of, 501; loose, 505; incline brake wheels, 515
Whiting hoist, 210, 549
Whitmore brake gear, 193
Winding (*see also* Engines, winding), 129; ropes, 130; engine cylinder, 143; maximum strain, 151; speed, 150; acceleration, 151; speed of, 151; counter-balance ropes, 155; retardation, 156; compound engines, 161; types of engines, 164; frictional resistance, 211; taper ropes, 219; design of engines, 219; electric winding, 224, 632
Winding water, 42
Wire for self-acting haulage, 510
Wire gauge for screens, 384
Wire rope guides, 92
Windings, dynamo, 660
Workings, old, boring against, 26
Wood (John) and Sons' crab engine, 62
Wooden headgears, 108
Wooden guides, 98
Wood *v.* iron, 501
Wood *v.* steel, 104
Woolf system of winding, 161
Worthington pumps, 625
Worth, McKenzie and Co.'s pump, 607

Zimmer conveyor screen, 398, 447

LIBRARY OF THE UNIVERSITY OF